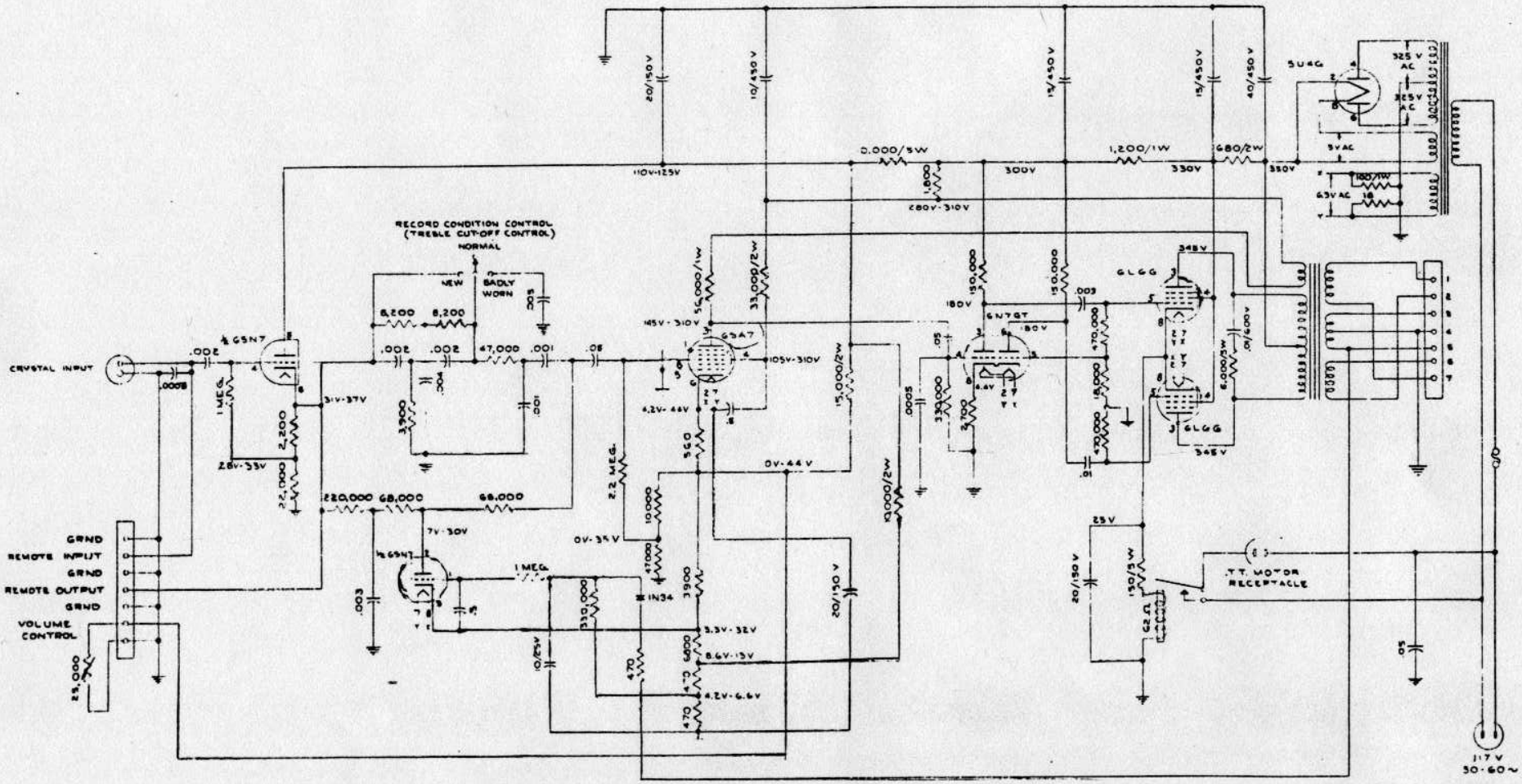

VOLTAGE MEASUREMENT CONDITIONS:
NO SIGNAL INPUT TO AMPLIFIER.
VOLTAGES ARE APPROXIMATE.
VOLTAGES ARE D.C. & MEASURED WITH RESPECT TO CHASSIS UNLESS OTHERWISE INDICATED.
SENSITIVITY OF D.C. VOLTMETER: 20000 OHMS/VOLT

WHERE TWO VOLTAGES ARE INDICATED, THE FIRST IS FOR THE VOLUME CONTROL IN THE MAXIMUM VOLUME POSITION; THE SECOND IS FOR THE VOLUME CONTROL IN THE MINIMUM VOLUME POSITION.

NOTES:
RESISTANCE VALUES ARE IN OHMS.
RESISTOR RATINGS ARE ½ WATT UNLESS OTHERWISE SPECIFIED.
CAPACITANCE VALUES ARE IN MICROFARADS.
CAPACITOR RATINGS ARE 400 VOLTS UNLESS OTHERWISE SPECIFIED.

Fig. 9. Schematic Diagram - Amplifier

AMI Model 'C'