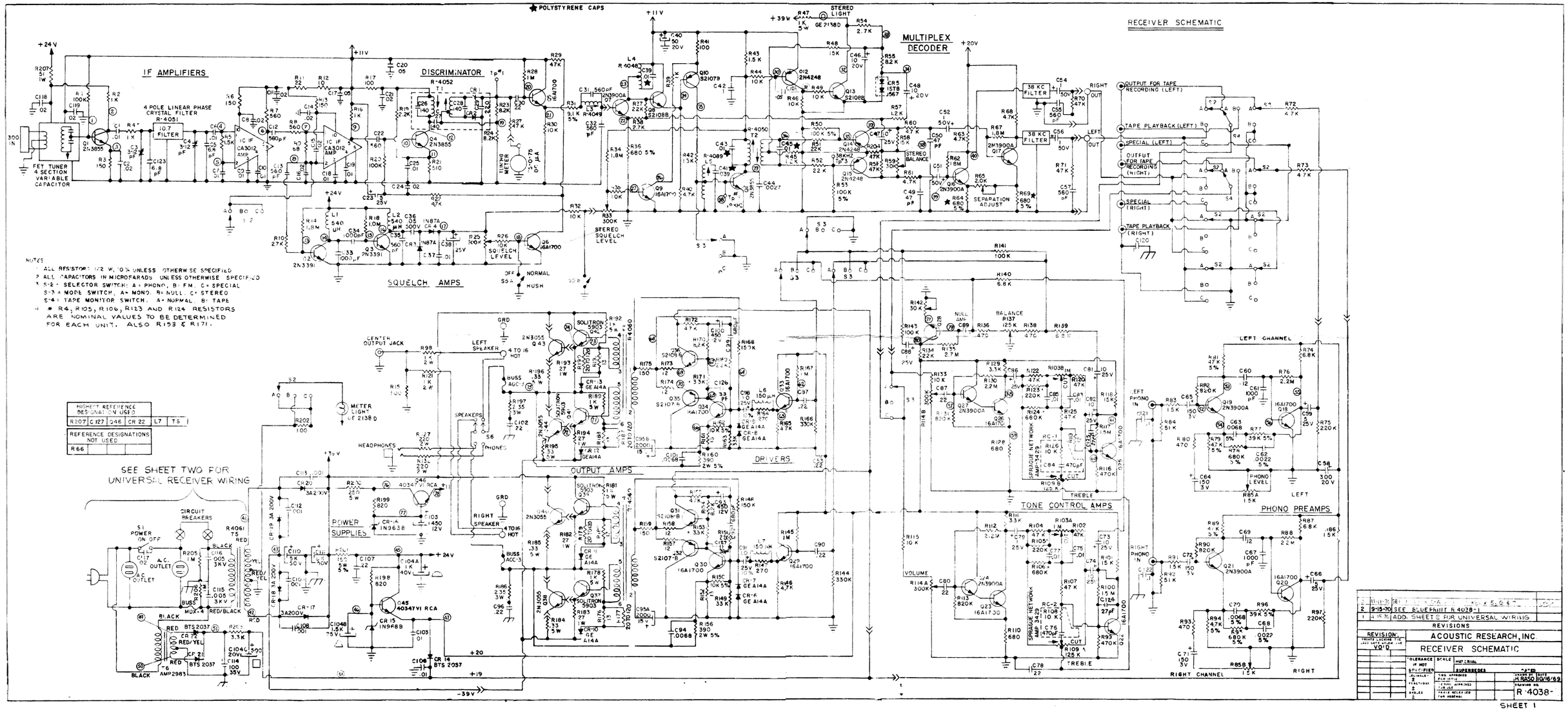
RECEIVER SCHEMATIC
POLYSTYRENE CAPS
IF AMPLIFIERS
DISCRIMINATOR
MULTIPLEX DECODER
SQUELCH AMPS
OUTPUT AMPS
DRIVERS
TONE CONTROL AMPS
PHONO PREAMPS
POWER SUPPLIES
LEFT CHANNEL
RIGHT CHANNEL
4 POLE LINEAR PHASE CRYSTAL FILTER R-4051
FET TUNER 4 SECTION VARIABLE CAPACITOR
STEREO LIGHT
38 KC FILTER
OUTPUT FOR TAPE RECORDING (LEFT)
TAPE PLAYBACK (LEFT)
SPECIAL (LEFT)
OUTPUT FOR TAPE RECORDING (RIGHT)
SPECIAL (RIGHT)
TAPE PLAYBACK (RIGHT)
STEREO BALANCE
SEPARATION ADJUST
STEREO SQUELCH LEVEL
SQUELCH LEVEL
OFF NORMAL HUSH
TUNING METER
CENTER OUTPUT JACK
LEFT SPEAKER
RIGHT SPEAKER
4 TO 16 HOT
SPEAKERS
HEADPHONES
METER LIGHT LE 2138 D
NULL AMP
BALANCE R137 125K
PHONO LEVEL
VOLUME
TREBLE
SPRAGUE NETWORK AMP 3429
SEE SHEET TWO FOR UNIVERSAL RECEIVER WIRING
CIRCUIT BREAKERS
AC OUTLET
POWER ON OFF
NOTES
1 ALL RESISTORS 1/2 W, 10% UNLESS OTHERWISE SPECIFIED
2 ALL CAPACITORS IN MICROFARADS UNLESS OTHERWISE SPECIFIED
3 S-2 - SELECTOR SWITCH: A= PHONO, B= FM, C= SPECIAL
S-3 = MODE SWITCH, A= MONO, B= NULL, C= STEREO
S-4 = TAPE MONITOR SWITCH, A= NORMAL, B= TAPE
4 * R4, R105, R106, R123 AND R124 RESISTORS ARE NOMINAL VALUES TO BE DETERMINED FOR EACH UNIT. ALSO R153 & R171.
HIGHEST REFERENCE DESIGNATION USED
R207 C127 Q46 CR 22 L7 T5
REFERENCE DESIGNATIONS NOT USED
R66
REVISIONS
2 9-15-70 SEE BLUEPRINT R 4028-1
1 4-15-70 ADD. SHEET 2 FOR UNIVERSAL WIRING
REVISION
VO'D
ACOUSTIC RESEARCH, INC.
RECEIVER SCHEMATIC
SUPERSEDES
DRAWN BY DATE
H RASO 10/16/69
DRAWING NO.
R-4038-
SHEET 1