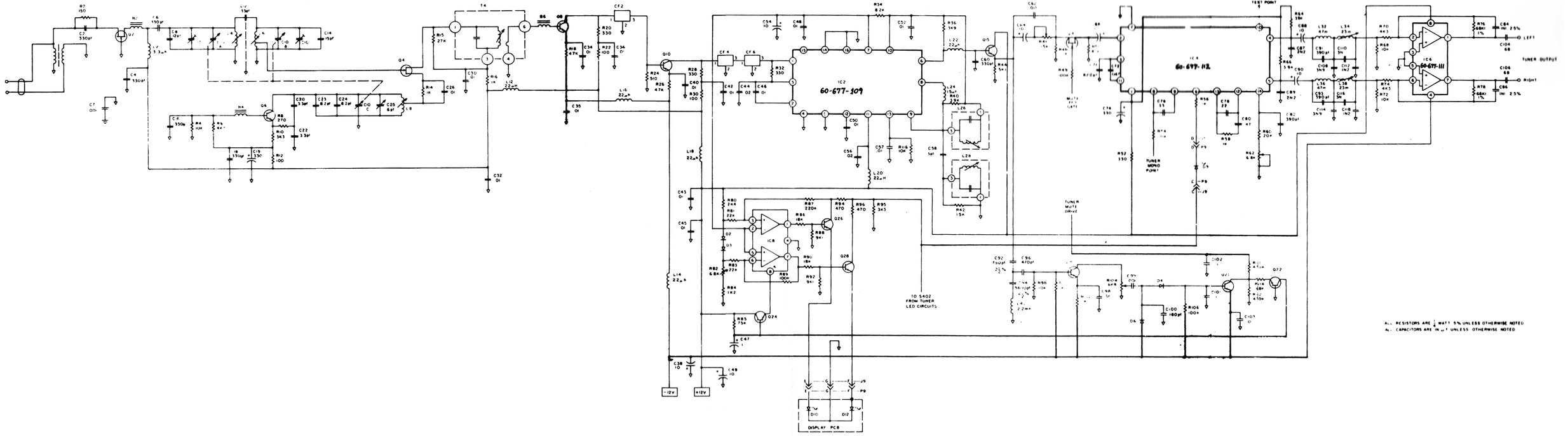
IC2
60-677-109
IC4
60-677-112
IC6
60-677-111
TUNER OUTPUT
LEFT
RIGHT
TUNER MUTE DRIVE
TUNER MONO POINT
TO S402 FROM TUNER LED CIRCUITS
DISPLAY PCB
+12V
-12V
ALL RESISTORS ARE 1/4 WATT 5% UNLESS OTHERWISE NOTED
ALL CAPACITORS ARE IN µF UNLESS OTHERWISE NOTED

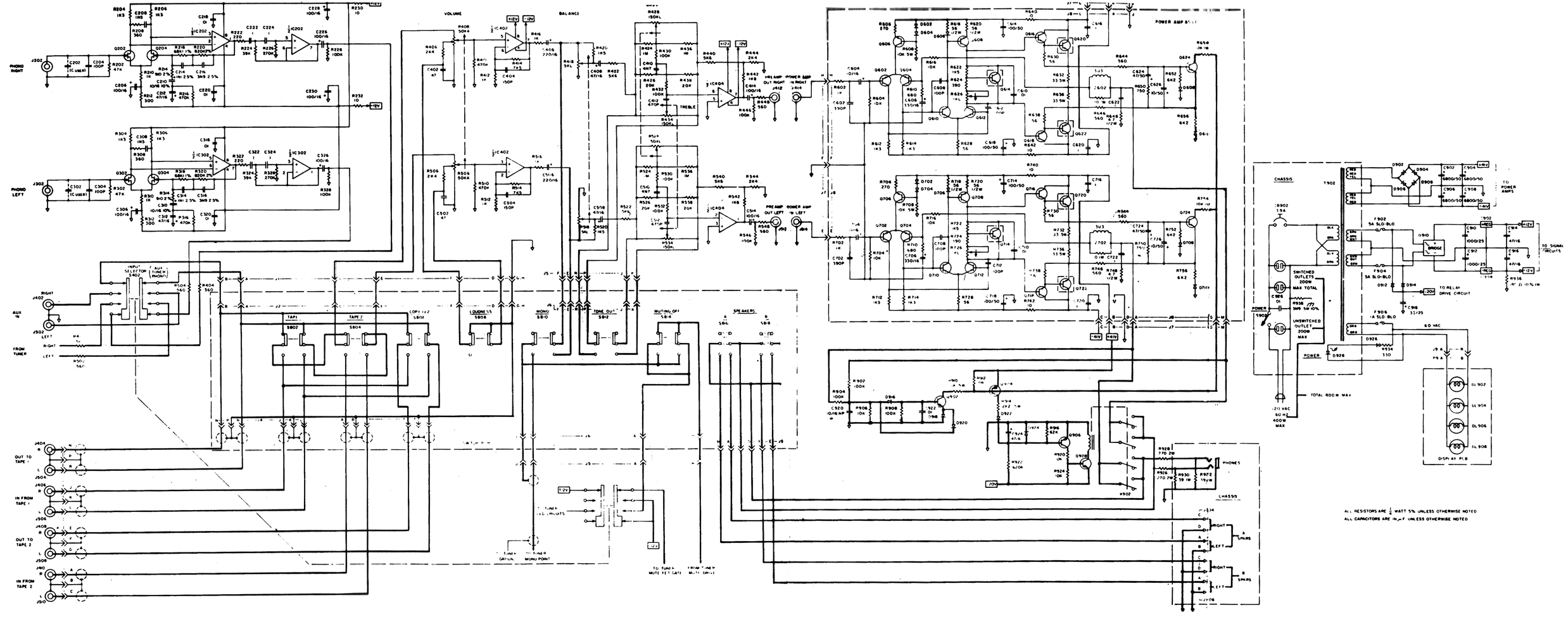
PHONO RIGHT
PHONO LEFT
VOLUME
BALANCE
TREBLE
BASS
PREAMP OUT RIGHT
POWER AMP IN RIGHT
PREAMP OUT LEFT
POWER AMP IN LEFT
POWER AMP
INPUT SELECTOR S402
AUX TUNER PHONO
RIGHT
AUX IN
LEFT
FROM TUNER
TAPE 1
TAPE 2
COPY TAPE S807
LOUDNESS S808
MONO S810
TONE OUT S812
MUTING OFF S814
SPEAKERS
OUT TO TAPE 1
IN FROM TAPE 1
OUT TO TAPE 2
IN FROM TAPE 2
TO TUNER MUTE FET GATE
FROM TUNER MUTE DRIVE
CHASSIS
SWITCHED OUTLETS 200W MAX TOTAL
UNSWITCHED OUTLET 200W MAX
POWER
TOTAL 800W MAX
TO POWER AMPS
TO SIGNAL CIRCUITS
TO RELAY DRIVE CIRCUIT
60 VAC
DISPLAY PCB
PHONES
ALL RESISTORS ARE 1/4 WATT 5% UNLESS OTHERWISE NOTED
ALL CAPACITORS ARE IN µF UNLESS OTHERWISE NOTED