aiwa

aiwa SERVICE

NSX-S555
NSX-S556

SERVICE MANUAL

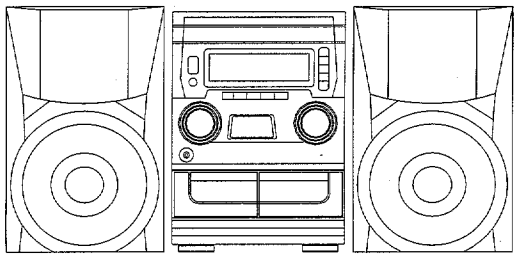

COMPACT DISC STEREO SYSTEM

- BASIC TAPE MECHANISM : 6ZM-3 PR2NM/2ZM-3MK2 PR4NM
- BASIC CD MECHANISM : 4ZG-1 Z3RDSHM
- TYPE: HR,EZ,K,V

REVISION PUBLISHING

SYSTEM	CD – CASSIVER	SPEAKER
NSX-S555	CX-NS555	SX-WNS555
NSX-S556	CX-NS556	SX-WNS556

- This Service Manual is the "Revision Publishing" and replaces "Simple Manual" (S/M Code No. 09-992-401-7T2).
- If requiring information about the CD mechanism,see Service Manual of 4ZG-1 (S/M Code No. 09-983-249-3S2).

S/M Code No. 09–996–401–7R2

TABLE OF CONTENTS

SPECIFICATIONS 3
PROTECTION OF EYES FROM LASER BEAM DURING SERVICING 4
PRECAUTION TO REPLACE OPTICAL BLOCK 4
NOTE ON BEFORE SERVICING 5
ELECTRICAL MAIN PARTS LIST 7
TRANSISTOR ILLUSTRATION 12
FL GRID ASSIGNMENT 13
ANODE CONNECTION 13
BLOCK DIAGRAM – 1 (TUNER <HR>) 14
BLOCK DIAGRAM – 2 (TUNER <EZ,K>) 15
BLOCK DIAGRAM – 3 (TUNER <V>) 16
BLOCK DIAGRAM – 4 (MAIN / FRONT) 17
SCHEMATIC DIAGRAM – 1 (MAIN <HR>) 20
WIRING – 1 (MAIN <HR>) 23
WIRING – 2 (MAIN <EZ,K,V>) 25
SCHEMATIC DIAGRAM – 2 (MAIN <EZ,K,V>) 27
WIRING – 3 (FRONT) 30
SCHEMATIC DIAGRAM – 3 (FRONT <HR>) 33
SCHEMATIC DIAGRAM – 4 (FRONT <EZ,K,V>) 36
WIRING – 4 (DECK <HR>) 39
WIRING – 5 (DECK <EZ,K,V>) 40
SCHEMATIC DIAGRAM – 5 (DECK) 41
SCHEMATIC DIAGRAM – 6 (TUNER <HR>) 43
WIRING – 6 (TUNER <HR>) 45
WIRING – 7 (TUNER <EZ,K>) 46
SCHEMATIC DIAGRAM – 7 (TUNER <EZ,K>) 47
SCHEMATIC DIAGRAM – 8 (TUNER <V>) 49
WIRING – 8 (TUNER <V>) 51
WIRING – 9 (PS <HR>) 52
SCHEMATIC DIAGRAM – 9 (PS <HR>) 53
WIRING – 10 (PS <EZ>) 54
SCHEMATIC DIAGRAM – 10 (PS <EZ>) 55
WIRING – 11 (PS <K,V>) 56
SCHEMATIC DIAGRAM – 11 (PS <K,V>) 57
IC BLOCK DIAGRAM 58
IC DESCRIPTION 61
ELECTRICAL ADJUSTMENT (TUNER <HR>) 63
ELECTRICAL ADJUSTMENT (TUNER <EZ,K>) 64
ELECTRICAL ADJUSTMENT (TUNER <V>) 65
ELECTRICAL ADJUSTMENT (DECK) 66
PRACTICAL SERVICE FIGURE 68
MECHANICAL EXPLODED VIEW 1 / 1 70
MECHANICAL PARTS LIST 71
MECHANISM PARTS LIST 1 / 1 (HR) 72
MECHANISM EXPLODED VIEW 1 / 1 (HR) 73
MECHANISM EXPLODED VIEW 1 / 1 (EZ, K, V) 75
MECHANISM PARTS LIST 1 / 1 (EZ, K, V) 77
SPRING APPLICATION POSITION (HR) 78
SPRING APPLICATION POSITION (EZ,K,V) 79
SPEAKER DIS-ASSEMBLY INSTRUCTIONS 80
SPEAKER PARTS LIST 81
ACCESSORIES / PACKAGE LIST 81
REFERENCE NAME LIST 82

SPECIFICATIONS

Main unit CX-NS555<HR,EZ,K,V>,CX-NS556<EZ>

<FM Tuner section>	
Tuning range	87.5 MHz to 108 MHz
Usable sensitivity (IHF)	13.2 dBf
Antenna terminal	75 ohms (unbalanced)
<FM Tuner section>	<V>
Tuning range	FM1 (OIRT): 65.0 MHz to 74.0 MHz (10 kHz step) FM2 (CCIR): 87.5 MHz to 108 MHz (50 kHz step)
Usable sensitivity (IHF)	FM1 : 15.3 dBf FM2 : 12.8 dBf
Antenna terminal	75 ohms (unbalanced)
<MW Tuner section>	
Tuning range	530 kHz to 1710 kHz (10 kHz step) 531 kHz to 1602 kHz (9 kHz step)
Usable sensitivity	350 uV/m
Antenna	Loop Antenna
<SW Tuner section>	<HR>
Tuning range	5.9 MHz to 17.9 MHz
Antenna	Wire Antenna
<LW Tuner section>	<555/556EZ,K>
Tuning range	144 kHz to 290 kHz
Usable sensitivity	1400 uV/m
Antenna	Loop Antenna
<Amplifier section>	
Mid-high frequency amplifier	
Power output	Rated 10W +10W (8ohms,T.H.D. 1%,1kHz) Reference:12W +12W (8ohms, T.H.D. 10%,1kHz) DIN MUSIC POWER : 28W+28W <555/556EZ,K>
Total harmonic distortion	0.06%(8W,1kHz,8ohms,DIN AUDIO)
Low frequency amplifier	
Power output	Rated 40W + 40W (4ohms,T.H.D. 1%,135Hz) Reference:50W + 50W (4ohms, T.H.D. 10%,135Hz) Rated 30W + 30W (4ohms,T.H.D. 1%,135Hz)<555/556EZ,K,V> Reference:37W + 37W (4ohms, T.H.D. 10%,135Hz)<555/556EZ,K,V> DIN MUSIC POWER : 63W+63W<555/556EZ,K>
Total harmonic distortion	0.06%(32W,135Hz,4ohms,DIN AUDIO)
Inputs	VIDEO / AUX: 300mV (adjustable) Mic : 1.0mV (10k ohms)
Outputs	SPEAKER HIGH FREQ : 8ohms or more SPEAKER LOW FREQ : 4ohms or more SURROUND SPEAKERS : 8ohms or more PHONES : 32ohms
<Cassette deck section>	
Track format	4 tracks, 2 channels stereo
Frequency response	50 Hz – 15000 Hz
Recording system	AC bias
Heads	Deck 1 : Playback head x 1 Deck 2 : Recording/playback/ erase head x 1
<Compact disc player section>	
Laser	Semiconductor laser (λ =780 nm)
D-A converter	1 bit dual
Signal-to-noise ratio	85 dB (1kHz,0dB)
Harmonic distortion	0.05% (1kHz,0dB)
<General>	
Power requirements	120V/220 - 230V/240V AC switchable,50/60Hz<HR> 230V AC,50Hz<555/556EZ,K,V>
Power consumption	135 W<HR> 140 W<555/556EZ,K,V>
Dimensions of main unit (W x H x D)	260 x 330 x 355 mm
Weight of main unit	8.5 kg<HR> 8.2 kg<555/556EZ,V> 8.0 kg<K>

Speaker system SX-WNS555/SX-WNS556<556EZ>

Cabinet type	2 way, subwoofer (magnetic shielded type)
Speakers	Subwoofer : 160 mm cone type Full range : 100 mm cone type
Impedance	4 ohms/8 ohms
Output sound pressure level	87 dB/W/m
Dimensions (W x H x D)	240 x 324 x 275 mm
Weight	4.8 kg

• Design and specifications are subject to change without notice.

PROTECTION OF EYES FROM LASER BEAM DURING SERVICING

This set employs laser. Therefore, be sure to follow carefully the instructions below when servicing.

WARNING!!
WHEN SERVICING, DO NOT APPROACH THE LASER EXIT WITH THE EYE TOO CLOSELY. IN CASE IT IS NECESSARY TO CONFIRM LASER BEAM EMISSION. BE SURE TO OBSERVE FROM A DISTANCE OF MORE THAN 30cm FROM THE SURFACE OF THE OBJECTIVE LENS ON THE OPTICAL PICK-UP BLOCK.

- Caution: Invisible laser radiation when open and interlocks defeated avoid exposure to beam.
- Advarsel: Usynlig laserståling ved åbning, når sikkerhedsafbrydere er ude af funktion. Undgå udsættelse for stråling.

VAROITUS!
Laiteen Käyttäminen muulla kuin tässä käyttöohjeessa mainitulla tavalla saattaa altistaa käyt-täjän turvallisuusluokan 1 ylittävälle näkymättömälle lasersäteilylle.

VARNING!
Om apparaten används på annat sätt än vad som specificeras i denna bruksanvising, kan användaren utsättas för osynling laserstrålning, som överskrider gränsen för laserklass 1.

CAUTION
Use of controls or adjustments or performance of procedures other than those specified herein may result in hazardous radiation exposure.

ATTENTION
L'utilisation de commandes, réglages ou procédures autres que ceux spécifiés peut entraîner une dangereuse exposition aux radiations.

ADVARSEL!
Usynlig laserståling ved åbning, når sikkerhedsafbrydereer ude af funktion. Undgå udsættelse for stråling.

This Compact Disc player is classified as a CLASS 1 LASER product.
The CLASS 1 LASER PRODUCT label is located on the rear exterior.

CLASS 1	LASER PRODUCT
KLASSE 1	LASER PRODUKT
LUOKAN 1	LASER LAITE
KLASS 1	LASER APPARAT

Precaution to replace Optical block

(KSS – 213F)

Body or clothes electrostatic potential could ruin laser diode in the optical block. Be sure ground body and workbench, and use care the clothes do not touch the diode.

1) After the connection, remove solder shown in right figure.

PICK-UP Assy P.C.B

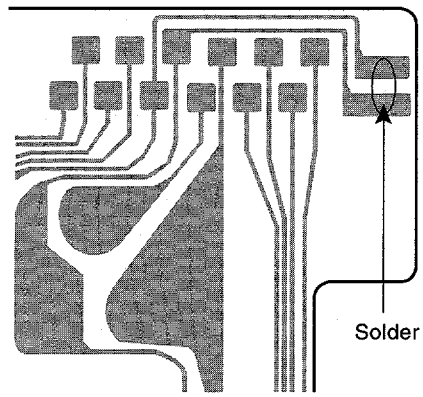

NOTE ON BEFORE STARTING REPAIR

1. Forced discharge of electrolytic capacitor of power supply block

When repair is going to be attempted in the set that uses relay circuit in the power supply block, electric potential is kept charged across the electrolytic capacitors (C101, 102) even though AC power cord is removed. If repair is attempted in this condition, secondary defect can occur.
In order to prevent the secondary trouble, perform the following measures before starting repair work.

Discharge procedure

① Remove the AC power cord.
② Connect a discharging resistor at an end of lead wire that has clips at both ends. Connect the other end of the lead wire to metal chassis.
③ Contact the other end of the discharging resistor to the positive (+) side (+VH) of C101. (For two seconds)
④ Contact the same end of the discharging resistor as step ③ to the negative (-) side (-VH) of C102 in the same way. (For two seconds)
⑤ Check that voltage across C101 and C102 has decreased to 1 V or less using a multimeter or an oscilloscope.

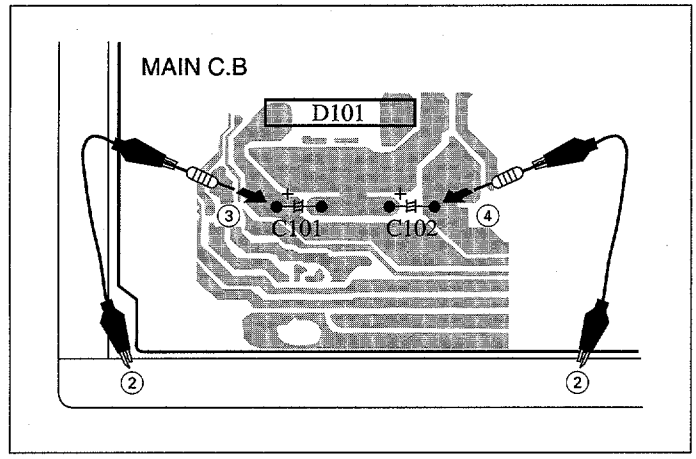

Fig-1

Select a discharging resistor referring to the following table.

Charging voltage (V) (C101, 102)	Discharging resistor (Ω)	Rated power (W)	Parts number
25-48	100	3	87-A00-247-090
49-140	220	5	87-A00-232-090

Note: The reference numbers (C101, C102) of the electrolytic capacitors can change depending on the models. Be sure to check the reference numbers of the charging capacitors on schematic diagram before starting the discharging work.

2. Check items before exchanging the MICROCOMPUTER

Be sure to check the following items before exchanging the MICROCOMPUTER. Exchange the MICROCOMPUTER after confirming that the MICROCOMPUTER is surely defective.

2-1. Regarding the HOLD terminal of the MICROCOMPUTER

When the HOLD terminal (INPUT) of the MICROCOMPUTER is "H", the MICROCOMPUTER is judged to be operating correctly. When this terminal is "L", the main power cannot be turned on. Therefore, be sure to check the terminal voltage of the HOLD terminal before exchange.
When the MICROCOMPUTER is not defective, the HOLD terminal can also go "L" when the POWER AMPLIFIER has any abnormalities that triggers the abnormality detection circuit on the MAIN C. B. that sets the HOLD terminal to "L".

- **Good or no good judgement of the MICROCOMPUTER**

① Turn on the AC main power.
② Confirm that the main power is turned on and the HOLD terminal of the MICROCOMPUTER keeps the "H" level or not.
③ When the HOLD terminal is "L" level, the abnormality detection circuit is judged to be working correctly and the MICROCOMPUTER is judged to be good.

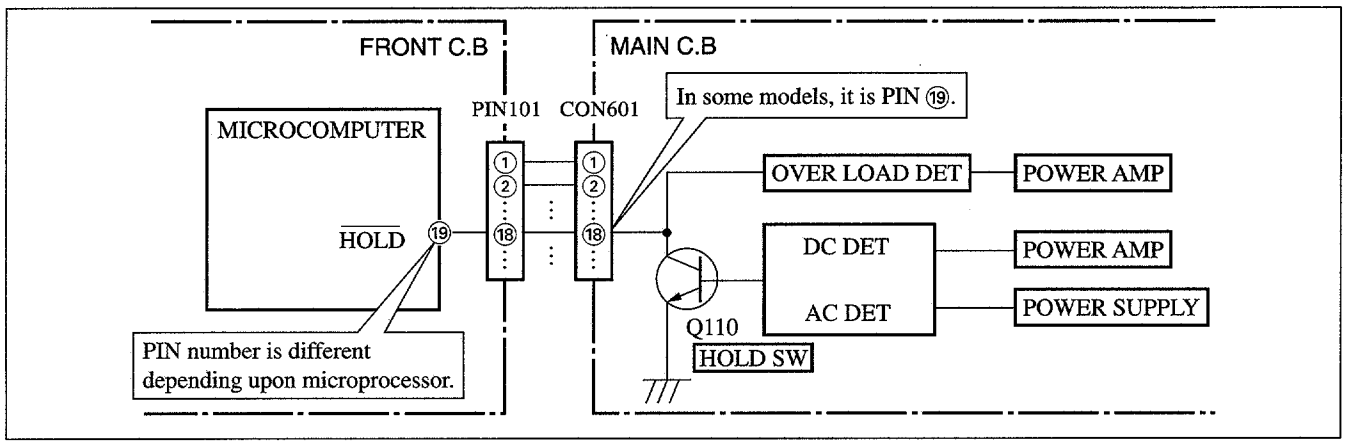

Fig-2-1

In such a case, check also if the POWER AMPLIFIER circuit or power supply circuit has any abnormalities or not.

2-2. Regarding reset

There are cases that the machine does not work correctly because the MICROCOMPUTER is not reset even though the AC power cord is re-inserted, or the software reset (pressing the STOP key + POWER key) is performed.
When the above described phenomenon occurs, it can lead to wrong judgement as if the MICROCOMPUTER is defective and to exchange the MICROCOMPUTER. In such a case, perform the forced-reset by the following procedure and check good or no good of the MICROCOMPUTER.

① Remove the AC power cord.

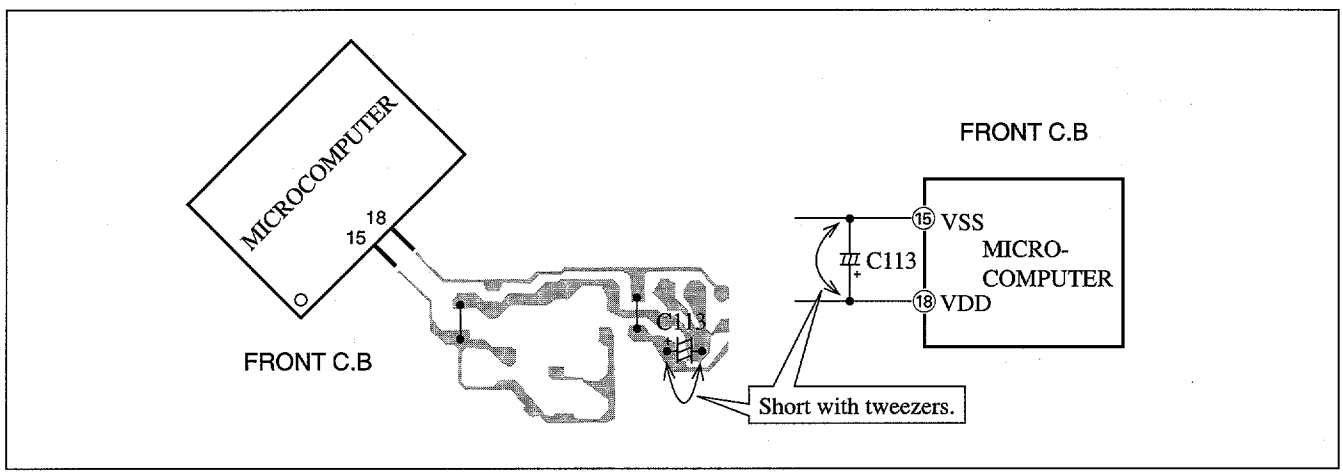

Fig-2-2

② Short both ends of the electrolytic capacitor C113 that is connected to VDD of the MICROCOMPUTER with tweezers.

③ Connect the AC power cord again. If the MICROCOMPUTER returns to the normal operation, the MICROCOMPUTER is good.

Note: The reference number or MICROCOMPUTER pin number of transistor (Q110) and electrolytic capacitor (C113) can change depending on the models. Be sure to check the reference numbers on schematic diagram before starting the discharging work.

2-3. Confirmation of soldering state of MICROCOMPUTER

Check the soldering state of the MICROCOMPUTER in addition to the above described procedures. Be sure to exchange the MICROCOMPUTER after surely confirming that the trouble is not caused by poor soldering but the MICROCOMPUTER itself.

ELECTRICAL MAIN PARTS LIST

If can't understand for Description please kindly refer to " REFERENCE NAME LIST ".

REF. NO.	PART NO.	KANRI NO.	DESCRIPTION
IC			
	8Z-NF8-675-010		C-IC,UPD780228GF-037-3BA
	87-NF8-614-010		IC,SPS-442-1-W
	87-A20-783-040		C-IC,BA7762AFS
	87-A21-023-040		C-IC,BA3835F
	87-A21-031-040		C-IC,BU4551BF
	87-A21-021-040		C-IC,BU2099FV
	87-A21-011-040		C-IC,M62445FP-600D
	87-070-127-110		IC,LC72131D
	87-A20-913-010		IC,LA1837NL
	87-A20-440-040		C-IC,BU1920FS<556EZ>
	87-A21-202-040		C-IC,M62445AFP<V>
	87-020-454-010		IC,DN6851
TRANSISTOR			
	87-026-609-080		TR,KTA1266GR
	89-213-702-010		TR,2SB1370 (1.8W)
	87-026-610-080		TR,KTC3198GR
	87-A30-076-080		C-TR,2SC3052F
	87-A30-075-080		C-TR,2SA1235F
	87-A30-196-080		TR,2SC4115SRS
	87-A30-074-080		C-TR,RT1P 141C
	87-A30-107-070		C-TR,CMBT5401
	87-A30-257-080		C-TR,2SD1306E
	87-A30-190-080		TR,CC5551
	87-A30-108-010		TR,2SB1626
	87-A30-106-070		C-TR,CMBT5551
	87-A30-087-080		C-FET,2SK2158<HR>
	87-A30-256-010		TR,2SD1933
	87-A30-255-010		TR,2SB1342
	87-A30-119-040		C-TR,2SC3906K R
	87-A30-159-080		C-TR,KTA1298Y
	87-A30-240-080		TR,CSA1585BC
	87-A30-073-080		C-TR,RT1N 141C
	87-A30-097-010		TR,FN1016<HR>
	87-A30-098-010		TR,FP1016<HR>
	87-A30-105-080		C-TR,RT1P 441C
	87-026-245-080		TR,DTC114ES
	87-A30-198-080		TR,KTC3199GR
	87-A30-214-010		TR,2SB1344
	87-A30-215-010		TR,2SD2025
	87-A30-086-070		C-TR,CSD1306E<V>
DIODE			
	87-020-465-080		DIODE,1SS133 (110MA)
	87-017-654-060		DIODE,GBU6J
	87-070-274-080		DIODE,1N4003 SEM
	87-A40-383-080		ZENER,MTZJ30A
	87-A40-345-080		ZENER,MTZJ10C
	87-A40-270-080		C-DIODE,MC2838
	87-A40-269-080		C-DIODE,MC2836
	87-A40-488-080		DIODE,1SS244
	87-A40-509-080		ZENER,MTZJ6.8C
	87-017-932-080		ZENER,MTJ6.2B
	87-A40-002-080		ZENER,MTZJ5.1C
	87-A40-438-080		ZENER,MTZJ4.7A
	87-A40-548-090		DIODE,D3SBA20
	87-017-447-010		DIODE,GBU4DL-6419<HR>
MAIN C.B			
C1	87-012-369-080		C-CAP,S 0.047-50F
C2	87-012-369-080		C-CAP,S 0.047-50F
C3	87-012-368-080		C-CAP,S 0.1-50 F
C4	87-012-368-080		C-CAP,S 0.1-50 F
C5	87-012-368-080		C-CAP,S 0.1-50 F
C6	87-012-368-080		C-CAP,S 0.1-50 F
C9	87-A10-520-090		CAP,E 3300-35 M SMG<HR>
C9	87-010-917-090		CAP,E 3300-50 M SMG<EXCEPT HR>
C10	87-A10-520-090		CAP,E 3300-35 M SMG<HR>
C10	87-010-917-090		CAP,E 3300-50 M SMG<EXCEPT HR>
C21	87-010-385-080		CAP, ELECT 220-25V<HR>
C21	87-010-408-080		CAP, ELECT 47-50V<EXCEPT HR>
C22	87-010-385-080		CAP, ELECT 220-25V<HR>
C22	87-010-408-080		CAP, ELECT 47-50V<EXCEPT HR>
C23	87-010-247-080		CAP, ELECT 100-50V<HR>
C23	87-010-408-080		CAP, ELECT 47-50V<EXCEPT HR>
C24	87-010-247-080		CAP, ELECT 100-50V<HR>
C24	87-010-408-080		CAP, ELECT 47-50V<EXCEPT HR>
C25	87-010-430-080		CAP, ELECT 100-63
C26	87-010-263-080		CAP, ELECT 100-10V
C27	87-012-140-080		CAP 470P<EXCEPT V>
C27	87-010-197-080		C-CAP,S 0.01-25 K B<V>
C29	87-010-247-080		CAP, ELECT 100-50V
C30	87-010-112-080		CAP, ELECT 100-16V
C31	87-010-235-080		CAP,E 470-16 SME
C33	87-010-405-080		CAP,E 10-50<HR>
C34	87-010-405-080		CAP,E 10-50<HR>
C61	87-010-260-080		CAP, ELECT 47-25V
C62	87-010-403-080		CAP, ELECT 3.3-50V
C91	87-010-401-080		CAP, E 1-50 M
C92	87-010-248-080		CAP, E 220-10 M
C93	87-010-380-080		CAP, E 47-16
C101	87-010-178-080		CHIP CAP 1000P
C102	87-010-178-080		CHIP CAP 1000P
C103	87-010-405-080		CAP, ELECT 10-50V
C104	87-010-405-080		CAP, ELECT 10-50V
C107	87-010-408-080		CAP, ELECT 47-50V
C108	87-010-408-080		CAP, ELECT 47-50V
C109	87-010-322-080		C-CAP,S 100P-50 CH
C110	87-010-322-080		C-CAP,S 100P-50 CH
C111	87-010-260-080		CAP, ELECT 47-25V
C112	87-010-260-080		CAP, ELECT 47-25V
C113	87-A10-685-080		C-CAP,S 470P-100 J CH<HR>
C113	87-A10-946-080		C-CAP,S 220P-100 J CH<EXCEPT HR>
C114	87-A10-685-080		C-CAP,S 470P-100 J CH<HR>
C114	87-A10-946-080		C-CAP,S 220P-100 J CH<EXCEPT HR>
C117	87-016-247-080		C-CAP,0.1-50 Z F<V>
C118	87-016-247-080		C-CAP,0.1-50 Z F<V>
C121	87-010-178-080		CHIP CAP 1000P
C122	87-010-178-080		CHIP CAP 1000P
C123	87-010-176-080		C-CAP,S 680P-50 SL
C124	87-010-176-080		C-CAP,S 680P-50 SL
C125	87-012-368-080		C-CAP,S 0.1-50 F
C126	87-012-368-080		C-CAP,S 0.1-50 F
C127	87-012-368-080		C-CAP,S 0.1-50 F
C128	87-012-368-080		C-CAP,S 0.1-50 F
C129	87-010-191-080		C-CAP,S 0.015-50 F
C130	87-010-191-080		C-CAP,S 0.015-50 F
C131	87-010-197-080		CAP, CHIP 0.01 DM
C132	87-010-197-080		CAP, CHIP 0.01 DM
C133	87-010-197-080		CAP, CHIP 0.01 DM
C203	87-010-177-080		C-CAP,S 820P-50 SL
C204	87-010-177-080		C-CAP,S 820P-50 SL
C209	87-010-403-080		CAP, ELECT 3.3-50V
C210	87-010-403-080		CAP, ELECT 3.3-50V
C211	87-010-181-080		CAP,CHIP S 1800P
C212	87-010-181-080		CAP,CHIP S 1800P
C213	87-010-403-080		CAP, ELECT 3.3-50V
C214	87-010-403-080		CAP, ELECT 3.3-50V
C215	87-010-322-080		C-CAP,S 100P-50 CH
C216	87-010-322-080		C-CAP,S 100P-50 CH
C217	87-010-260-080		CAP, ELECT 47-25V
C218	87-010-260-080		CAP, ELECT 47-25V
C219	87-A10-946-080		C-CAP,S 220P-100 J CH
C220	87-A10-946-080		C-CAP,S 220P-100 J CH
C223	87-010-190-080		S CHIP F 0.01<EXCEPT V>

REF. NO.	PART NO.	KANRI NO.	DESCRIPTION
C224	87-010-190-080		S CHIP F 0.01<EXCEPT V>
C225	87-012-368-080		C-CAP,S 0.1-50 F
C226	87-012-368-080		C-CAP,S 0.1-50 F
C227	87-010-186-080		CAP,CHIP 4700P
C228	87-010-186-080		CAP,CHIP 4700P
C229	87-010-993-080		C-CAP,S 0.056-25 B
C230	87-010-993-080		C-CAP,S 0.056-25 B
C231	87-010-196-080		CHIP CAPACITOR,0.1-25
C232	87-010-196-080		CHIP CAPACITOR,0.1-25
C233	87-010-190-080		S CHIP F 0.01
C234	87-010-190-080		S CHIP F 0.01
C235	87-016-285-080		CAP, ELECT 47-100 M
C236	87-016-285-080		CAP, ELECT 47-100 M
C237	87-010-322-080		C-CAP,S 100P-50 CH<EZ>
C238	87-010-322-080		C-CAP,S 100P-50 CH<EZ>
C239	87-010-196-080		CHIP CAPACITOR,0.1-25
C240	87-010-408-080		CAP, ELECT 47-50V
C301	87-010-318-080		C-CAP,S 47P-50 CH
C302	87-010-318-080		C-CAP,S 47P-50 CH
C303	87-012-157-080		C-CAP,S 330P-50 CH
C304	87-012-157-080		C-CAP,S 330P-50 CH
C305	87-012-145-080		CAP, CHIP S 270P CH
C306	87-012-145-080		CAP, CHIP S 270P CH
C307	87-010-196-080		CHIP CAPACITOR,0.1-25
C309	87-010-196-080		CHIP CAPACITOR,0.1-25
C310	87-010-196-080		CHIP CAPACITOR,0.1-25
C311	87-010-198-080		CAP, CHIP 0.022
C312	87-010-198-080		CAP, CHIP 0.022
C313	87-010-178-080		C-CAP,S 1000P-50 B<HR>
C313	87-010-180-080		C-CAP,S 1500P-50 K B<EXCEPT HR>
C314	87-010-178-080		C-CAP,S 1000P-50 B<HR>
C314	87-010-180-080		C-CAP,S 1500P-50 K B<EXCEPT HR>
C315	87-010-178-080		C-CAP,S 1000P-50 B<HR>
C315	87-010-180-080		C-CAP,S 1500P-50 K B<EXCEPT HR>
C316	87-010-178-080		C-CAP,S 1000P-50 B<HR>
C316	87-010-180-080		C-CAP,S 1500P-50 K B<EXCEPT HR>
C321	87-016-492-080		C-CAP,S 0.33-16 FZ
C322	87-016-492-080		C-CAP,S 0.33-16 FZ
C324	87-010-260-080		CAP, ELECT 47-25V
C325	87-010-370-080		CAP,E 330-6.3 SME
C327	87-010-404-080		CAP, ELECT 4.7-50V
C328	87-010-404-080		CAP, ELECT 4.7-50V
C332	87-010-196-080		CHIP CAPACITOR,0.1-25
C335	87-010-401-080		CAP, ELECT 1-50V
C336	87-010-401-080		CAP, ELECT 1-50V
C337	87-010-196-080		CHIP CAPACITOR,0.1-25
C339	87-010-196-080		CHIP CAPACITOR,0.1-25
C340	87-010-196-080		CHIP CAPACITOR,0.1-25
C351	87-012-140-080		CAP 470P
C352	87-012-140-080		CAP 470P
C354	87-010-175-080		CAP 560P
C355	87-012-349-080		C-CAP,S 1000P-50 CH
C356	87-010-260-080		CAP, ELECT 47-25V
C357	87-010-197-080		CAP, CHIP 0.01 DM
C358	87-010-183-080		C-CAP,S 2700P-50 B
C359	87-010-183-080		C-CAP,S 2700P-50 B
C360	87-010-183-080		C-CAP,S 2700P-50 B
C363	87-A10-772-080		CAP,M 5600P-50 J
C370	87-010-196-080		CHIP CAPACITOR,0.1-25
C373	87-016-083-080		C-CAP,S 0.15-16 RK
C374	87-016-083-080		C-CAP,S 0.15-16 RK
C378	87-010-196-080		CHIP CAPACITOR,0.1-25
C379	87-010-406-080		CAP, ELECT 22-50
C380	87-010-406-080		CAP, ELECT 22-50
C382	87-010-312-080		C-CAP,S 15P-50 CH
C386	87-010-196-080		CHIP CAPACITOR,0.1-25
C387	87-012-145-080		CAP, CHIP S 270P CH
C388	87-012-156-080		C-CAP,S 220P-50 CH
C391	87-010-319-080		C-CAP,S 56P-50 CH
C392	87-010-319-080		C-CAP,S 56P-50 CH
C393	87-010-319-080		C-CAP,S 56P-50 CH
C394	87-010-319-080		C-CAP,S 56P-50 CH
C451	87-010-401-080		CAP, ELECT 1-50V
C452	87-010-401-080		CAP, ELECT 1-50V
C457	87-010-196-080		CHIP CAPACITOR,0.1-25
C458	87-010-196-080		CHIP CAPACITOR,0.1-25
C459	87-A10-299-080		CAP,M 0.022-50 J<V>
C459	87-A11-004-080		CAP,M 0.022-50 J<EXCEPT V>
C460	87-A10-299-080		CAP,M 0.022-50 J<V>
C460	87-A11-004-080		CAP,M 0.022-50 J<EXCEPT V>
C465	87-A10-299-080		CAP,M 0.022-50 J<V>
C465	87-A11-004-080		CAP,M 0.022-50 J<EXCEPT V>
C466	87-A10-299-080		CAP,M 0.022-50 J<V>
C466	87-A11-004-080		CAP,M 0.022-50 J<EXCEPT V>
C601	87-010-180-080		C-CER 1500P
C602	87-010-180-080		C-CER 1500P
C605	87-010-318-080		C-CAP,S 47P-50 CH
C606	87-010-318-080		C-CAP,S 47P-50 CH
C613	87-016-081-080		C-CAP,S 0.1-16 RK
C614	87-016-081-080		C-CAP,S 0.1-16 RK
C615	87-A11-011-080		CAP,M 0.12-50 J DE
C616	87-A11-011-080		CAP,M 0.12-50 J DE
C617	87-A11-008-080		CAP,M 0.056-50 J<EXCEPT V>
C617	87-A10-305-080		CAP,M 0.068-50 J<V>
C618	87-A11-008-080		CAP,M 0.056-50 J<EXCEPT V>
C618	87-A10-305-080		CAP,M 0.068-50 J<V>
C619	87-010-185-080		C-CAP,S 3900P-50 B
C620	87-010-185-080		C-CAP,S 3900P-50 B
C621	87-010-401-080		CAP, ELECT 1-50V
C622	87-010-401-080		CAP, ELECT 1-50V
C623	87-A10-307-080		CAP,M 0.10-50 J<V>
C623	87-A10-773-080		CAP,M 0.1-50 J<EXCEPT V>
C624	87-A10-307-080		CAP,M 0.10-50 J<V>
C624	87-A10-773-080		CAP,M 0.1-50 J<EXCEPT V>
C625	87-010-405-080		CAP, ELECT 10-50V
C626	87-010-405-080		CAP, ELECT 10-50V
C627	87-010-196-080		CHIP CAPACITOR,0.1-25
C629	87-010-405-080		CAP, ELECT 10-50V
C630	87-010-213-080		C-CAP,S 0.015-50 B
C631	87-010-992-080		C-CAP,S 0.047-25 B
C632	87-010-263-080		CAP, ELECT 100-10V
C633	87-010-263-080		CAP, ELECT 100-10V
C634	87-010-196-080		CHIP CAPACITOR,0.1-25
C635	87-010-196-080		CHIP CAPACITOR,0.1-25
C636	87-010-194-080		C-CAP,S 0.047-25<HR>
C637	87-010-183-080		C-CAP,S 2700P-50 B
C638	87-010-314-080		C-CAP,S 22P-50V
C639	87-010-314-080		C-CAP,S 22P-50V
C641	87-010-196-080		CHIP CAPACITOR,0.1-25
C669	87-010-322-080		C-CAP,S 100P-50 CH<V>
C670	87-010-322-080		C-CAP,S 100P-50 CH<V>
C678	87-010-196-080		CHIP CAPACITOR,0.1-25<V>
C680	87-010-196-080		CHIP CAPACITOR,0.1-25<V>
C731	87-010-560-080		CAP, ELECT 10-50
C732	87-010-196-080		CHIP CAPACITOR,0.1-25
C733	87-010-196-080		CHIP CAPACITOR,0.1-25
C734	87-012-157-080		C-CAP,S 330P-50
C736	87-010-196-080		CHIP CAPACITOR,0.1-25
CN91	87-A60-109-010		CONN,2P <HR,K>
CN301	87-099-827-010		CONN,3P S2M-3W
CN351	87-099-832-010		CONN,8P S2M-8W
CN601	88-NF9-657-010		CONN,30P H BLK TYK-B(X)
CN602	87-A60-131-010		CONN,6P V FE
CN604	87-099-570-010		CONN,13P TUC-P13P-B1<EXCEPT 556EZ>
CN605	87-A60-189-010		CONN,16P V<556EZ>
J201	87-A60-483-010		JACK,DIA 6.3 BLK ST W/S KM
J203	87-A60-238-010		TERMINAL,SP 4P
J204	87-A60-750-010		JACK,PIN 4P
J602	87-A60-398-010		JACK,PIN 2P R/W HSP-242V24
L101	87-003-383-010		COIL,1UH-S

REF. NO.	PART NO.	KANRI NO.	DESCRIPTION
L102	87-003-383-010		COIL,1UH-S
L201	87-003-383-010		COIL,1UH-S
L202	87-003-383-010		COIL,1UH-S
L301	87-A50-049-010		COIL,TRAP 85K(COI)
L302	87-A50-049-010		COIL,TRAP 85K(COI)
L351	87-007-342-010		COIL,OSC 85K BIAS
R20	87-A00-261-080		RES,M/F 0.56-1W J
R129	87-A00-257-080		RES,M/F 0.15-1W J
R130	87-A00-257-080		RES,M/F 0.15-1W J
R131	87-A00-257-080		RES,M/F 0.15-1W J
R132	87-A00-257-080		RES,M/F 0.15-1W J
R143	87-A00-440-050		RES,220-1/2W J<HR>
R143	87-A00-439-050		RES,180-1/2W J RP<EXCEPT HR>
R144	87-A00-440-050		RES,220-1/2W J<HR>
R144	87-A00-439-050		RES,180-1/2W J RP<EXCEPT HR>
R145	87-A00-440-050		RES,220-1/2W J<HR>
R145	87-A00-439-050		RES,180-1/2W J RP<EXCEPT HR>
R146	87-A00-440-050		RES,220-1/2W J<HR>
R146	87-A00-439-050		RES,180-1/2W J RP<EXCEPT HR>
R165	87-A00-257-080		RES,M/F 0.15-1W J
R166	87-A00-257-080		RES,M/F 0.15-1W J
R231	87-A00-258-080		RES,M/F 0.22-1W J
R232	87-A00-258-080		RES,M/F 0.22-1W J
R233	87-A00-258-080		RES,M/F 0.22-1W J
R234	87-A00-258-080		RES,M/F 0.22-1W J
R265	87-A00-258-080		RES,M/F 0.22-1W J
R266	87-A00-258-080		RES,M/F 0.22-1W J
SFR351	87-A90-433-080		SFR,50K H NVZ6TLTA
SFR352	87-A90-433-080		SFR,50K H NVZ6TLTA
TH101	87-A91-042-080		C-THMS,100K
TH101	87-A91-042-080		C-THMS,100K
WH1	87-A90-510-010		HLDR,WIRE 2.5-9P
JW16	87-008-372-080		FLTR,EMI BL01 RN1
FRONT C.B			
C201	87-012-156-080		C-CAP,S 220P-50 CH
C202	87-010-322-080		C-CAP,S 100P-50 CH
C203	87-010-322-080		C-CAP,S 100P-50 CH
C204	87-010-322-080		C-CAP,S 100P-50 CH
C205	87-010-322-080		C-CAP,S 100P-50 CH
C206	87-010-322-080		C-CAP,S 100P-50 CH
C207	87-010-322-080		C-CAP,S 100P-50 CH
C208	87-010-322-080		C-CAP,S 100P-50 CH
C209	87-010-322-080		C-CAP,S 100P-50 CH
C210	87-010-322-080		C-CAP,S 100P-50 CH
C211	87-010-322-080		C-CAP,S 100P-50 CH
C251	87-015-699-040		CAP,E 10-50 7L
C252	87-010-198-080		CAP, CHIP 0.022
C254	87-010-194-080		CAP, CHIP 0.047
C255	87-A10-586-040		CAP,E 47-35 7L SR
C256	87-015-699-040		CAP,E 10-50 7L
C259	87-015-699-040		CAP,E 10-50 7L
C260	87-010-198-080		CAP, CHIP 0.022
C262	87-010-196-080		CHIP CAPACITOR,0.1-25
C301	87-010-182-080		C-CAP,S 2200P-50 B
C302	87-010-182-080		C-CAP,S 2200P-50 B
C311	87-010-194-080		CAP, CHIP 0.047
C313	87-010-196-080		CHIP CAPACITOR,0.1-25
C314	87-010-194-080		CAP, CHIP 0.047
C321	87-010-196-080		CHIP CAPACITOR,0.1-25
C323	87-010-248-040		CAP,E 220-10 SME
C324	87-010-194-080		CAP, CHIP 0.047
C331	87-010-196-080		CHIP CAPACITOR,0.1-25
C332	87-010-178-080		CHIP CAP 1000P
C333	87-012-140-080		CAP 470P
C334	87-010-312-080		C-CAP,S 15P-50 CH
C335	87-012-140-080		CAP 470P
C336	87-010-196-080		CHIP CAPACITOR,0.1-25
C337	87-010-196-080		CHIP CAPACITOR,0.1-25
C338	87-012-155-080		C-CAP 180P-50CH

REF. NO.	PART NO.	KANRI NO.	DESCRIPTION
C339	87-012-156-080		C-CAP,S 220P-50 CH
C340	87-010-197-080		CAP, CHIP 0.01 DM
C401	87-010-197-080		CAP, CHIP 0.01 DM
C451	87-010-196-080		CHIP CAPACITOR,0.1-25
C452	87-010-196-080		CHIP CAPACITOR,0.1-25
C453	87-010-196-080		CHIP CAPACITOR,0.1-25
C454	87-010-196-080		CHIP CAPACITOR,0.1-25
C455	87-010-196-080		CHIP CAPACITOR,0.1-25
C456	87-012-158-080		C-CAP,S 390P-50 CH
C457	87-010-196-080		CHIP CAPACITOR,0.1-25
C502	87-010-186-080		CAP, CHIP 4700P<HR>
C503	87-010-112-040		CAP,E 100-16<HR>
C504	87-010-405-040		CAP,E 10-50<HR>
C505	87-010-546-040		CAP,E 0.33-50<HR>
C506	87-010-320-080		C-CAP,S 68P-50 CH<HR>
C507	87-010-544-040		CAP,E 0.1-50<HR>
C508	87-010-178-080		C-CAP,S 1000P-50 K<HR>
C509	87-010-544-040		CAP,E 0.1-50<HR>
C601	87-010-196-080		CHIP CAPACITOR,0.1-25
C602	87-010-322-080		C-CAP,S 100P-50 CH
C603	87-010-322-080		C-CAP,S 100P-50 CH
C604	87-010-322-080		C-CAP,S 100P-50 CH
C701	87-010-196-080		CHIP CAPACITOR,0.1-25
CON101	87-099-720-010		CONN,30P TYK-B(P)
CON102	87-099-015-010		CONN,13P 6216V
CON301	87-099-017-010		CONN,15P 6216 V<HR>
CON301	87-099-013-010		CONN,11P 6216 V<EXCEPT HR>
EMI201	87-008-372-080		FILTER, EMI BL OIRNI
EMI202	87-008-372-080		FILTER, EMI BL OIRNI
EMI701	87-A50-322-080		C-COIL,S BK2125 LM252
FL401	8Z-NF8-616-010		FL,SVA-11MM22
J501	87-A60-651-010		JACK,3.5 MONO<HR>
L331	87-A50-434-010		COIL,CLK 4.19M(TOKO)
LED311	87-A40-317-080		LED,SLR-342VCT31 RED
LED601	87-A40-619-040		LED,SLR-56PT-T31-W GRN
LED602	87-A40-619-040		LED,SLR-56PT-T31-W GRN
LED603	87-A40-619-040		LED,SLR-56PT-T31-W GRN
LED604	87-A40-619-040		LED,SLR-56PT-T31-W GRN
LED605	87-A40-619-040		LED,SLR-56PT-T31-W GRN
LED606	87-A40-619-040		LED,SLR-56PT-T31-W GRN
LED607	87-A40-619-040		LED,SLR-56PT-T31-W GRN
LED608	87-A40-619-040		LED,SLR-56PT-T31-W GRN
LED609	87-A40-619-080		LED,SLR-56PT-TE7-W GRN
LED610	87-A40-619-080		LED,SLR-56PT-TE7-W GRN
LED611	87-A40-619-080		LED,SLR-56PT-TE7-W GRN
LED612	87-A40-619-080		LED,SLR-56PT-TE7-W GRN
LED613	87-A40-619-080		LED,SLR-56PT-TE7-W GRN
LED614	87-A40-619-080		LED,SLR-56PT-TE7-W GRN
LED631	87-A40-619-040		LED,SLR-56PT-T31-W GRN
LED632	87-A40-619-040		LED,SLR-56PT-T31-W GRN
LED633	87-A40-619-040		LED,SLR-56PT-T31-W GRN
LED634	87-A40-619-040		LED,SLR-56PT-T31-W GRN
SW401	87-A91-024-080		SW,TACT KSH0611BT
SW402	87-A91-024-080		SW,TACT KSH0611BT
SW403	87-A91-024-080		SW,TACT KSH0611BT
SW404	87-A91-024-080		SW,TACT KSH0611BT
SW405	87-A91-024-080		SW,TACT KSH0611BT
SW406	87-A91-024-080		SW,TACT KSH0611BT
SW407	87-A91-024-080		SW,TACT KSH0611BT
SW408	87-A91-024-080		SW,TACT KSH0611BT
SW409	87-A91-024-080		SW,TACT KSH0611BT
SW410	87-A91-024-080		SW,TACT KSH0611BT
SW411	87-A91-024-080		SW,TACT KSH0611BT
SW412	87-A91-024-080		SW,TACT KSH0611BT
SW413	87-A91-024-080		SW,TACT KSH0611BT
SW414	87-A91-024-080		SW,TACT KSH0611BT
SW415	87-A91-024-080		SW,TACT KSH0611BT
SW416	87-A91-024-080		SW,TACT KSH0611BT
SW417	87-A91-024-080		SW,TACT KSH0611BT
SW418	87-A91-024-080		SW,TACT KSH0611BT

REF. NO.	PART NO.	KANRI NO.	DESCRIPTION
SW419	87-A91-024-080		SW,TACT KSH0611BT
SW420	87-A91-024-080		SW,TACT KSH0611BT
SW421	87-A91-024-080		SW,TACT KSH0611BT
SW422	87-A91-024-080		SW,TACT KSH0611BT
SW423	87-A91-024-080		SW,TACT KSH0611BT
SW424	87-A91-024-080		SW,TACT KSH0611BT
SW425	87-A91-024-080		SW,TACT KSH0611BT
SW426	87-A91-024-080		SW,TACT KSH0611BT
SW427	87-A91-024-080		SW,TACT KSH0611BT
SW428	87-A91-024-080		SW,TACT KSH0611BT<HR>
SW430	87-A91-024-080		SW,TACT KSH0611BT<556EZ>
SW431	87-A91-024-080		SW,TACT KSH0611BT<556EZ>
SW432	87-A91-024-080		SW,TACT KSH0611BT<556EZ>
SW434	87-A91-024-080		SW,TACT KSH0611BT<HR>
SW252	87-A90-535-010		SW,RTRY EC16B24304
SW253	87-A90-950-010		SW,RTRY EC12E12504 ENCORDER
VR501	87-NB7-602-010		VR,RTRY 10KAX1<HR>
PS C.B			
C1	87-010-388-080		CAP,E 1000-25<HR>
C1	87-010-387-080		CAP,E 470-25 SME<K,V>
C8	87-A10-520-090		CAP,E 3300-35<HR>
C9	87-A10-520-090		CAP,E 3300-35<HR>
C31	87-010-403-040		CAP,E 3.3-50 M<K,V>
CN1	87-A60-851-010		CONN,9P V VH<HR>
CN1	87-A60-850-010		CONN,7P V VH<EXCEPT HR>
⚠ PR1	87-026-682-080		PROTECTOR,10A 491S 60V<HR>
⚠ PR2	87-026-682-080		PROTECTOR,10A 491S 60V<HR>
⚠ PT1	8Z-NF8-605-010		PT,ZNF-8 HR<HR>
⚠ PT1	8Z-NF8-606-010		PT,ZNF-8 EZ<EZ,K,V>
⚠ PT2	8Z-NF8-663-010		PT,SUB ZNF-8<HR>
⚠ PT2	8Z-NF8-662-010		PT,SUB ZNF-8(E)<EXCEPT HR>
⚠ RY1	87-A91-281-010		RELAY,AC DC12V OSA-SS-212DM<HR>
⚠ RY2	87-A90-976-010		RELAY,AC12VSDT-S-112LMR<EZ,K,V>
⚠ S1	87-A90-165-010		SW,SL 1-2-3 SWS2301<HR>
⚠ T1	87-A60-317-010		TERMINAL, 1P MSC
⚠ T2	87-A60-317-010		TERMINAL, 1P MSC
TUNER C.B			
C701	87-010-381-080		CAP, ELECT 330-16V
C702	87-010-404-080		CAP, ELECT 4.7-50V
C703	87-012-286-080		CAP, U 0.01-25
C704	87-012-286-080		CAP, U 0.01-25
C705	87-A10-592-080		C-CAP,S 0.015-50 <EXCEPT EZ,K>
C706	87-A10-592-080		C-CAP,S 0.015-50 <EXCEPT EZ,K>
C709	87-012-195-080		C-CAP,U 100P-50CH
C711	87-010-553-080		CAP,E 47-16 M 5L<HR>
C711	87-010-260-080		CAP,ELECT 47-25<EXCEPT HR>
C712	87-010-831-080		C-CAP,U,0.1-16F
C714	87-012-286-080		CAP, U 0.01-25
C717	87-012-286-080		CAP, U 0.01-25
C718	87-012-179-080		C-CAP,U 20P-50CH<V>
C719	87-012-286-080		CAP, U 0.01-25
C720	87-012-195-080		C-CAP,U 100P-50CH
C721	87-012-176-080		CAP 15P
C722	87-012-176-080		CAP 15P
C723	87-012-274-080		CHIP CAP,U 1000P-50B
C725	87-018-131-080		CAP,TC U 1000P-50 K B<EZ,K>
C725	87-012-274-080		CHIP CAP,U 1000P-50B<EXCEPT EZ,K>
C727	87-010-196-080		CHIP CAPACITOR,0.1-25
C728	87-010-248-080		CAP, ELECT 220-10V
C729	87-012-274-080		CHIP CAP,U 1000P-50B
C731	87-012-286-080		CAP, U 0.01-25
C733	87-012-280-080		C-CAP,U 3300P-50 KB<EZ,K>
C733	87-010-987-080		C-CAP,S 1500P-50 CH<EXCEPT EZ,K>
C734	87-012-280-080		C-CAP,U 3300P-50 KB<EZ,K>
C734	87-010-987-080		C-CAP,S 1500P-50 CH<EXCEPT EZ,K>
C735	87-010-987-080		C-CAP,S 1500P-50 CH<EXCEPT EZ,K>
C736	87-010-987-080		C-CAP,S 1500P-50 CH<EXCEPT EZ,K>
C737	87-A10-592-080		C-CAP,S 0.015-50 J B<EXCEPT EZ,K>
C738	87-A10-592-080		C-CAP,S 0.015-50 J B<EXCEPT EZ,K>
C751	87-010-220-080		C-CAP,S 0.018-25KB<EXCEPT EZ,K>
C751	87-012-365-080		C-CAP,S 0.027-25<V>
C752	87-010-220-080		C-CAP,S 0.018-25KB<EXCEPT EZ,K>
C752	87-012-282-080		C-CAP,U 4700P-50 KB<EZ,K>
C752	87-012-365-080		C-CAP,S 0.027-25<V>
C753	87-012-195-080		C-CAP,U 100P-50CH<EZ,K>
C755	87-012-286-080		CAP, U 0.01-25<EZK>
C756	87-012-286-080		CAP, U 0.01-25
C757	87-012-188-080		C-CAP,U 47P-50 CH
C758	87-012-167-080		C-CAP,U 5P-50 CH
C761	87-010-196-080		CHIP CAPACITOR,0.1-25<EZ,K>
C762	87-010-196-080		CHIP CAPACITOR,0.1-25<EZ,K>
C763	87-010-829-080		CAP, U 0.047-16
C764	87-012-337-080		C-CAP,U 56P-50 CH<EXCEPT EZ,K>
C765	87-012-286-080		CAP, U 0.01-25
C766	87-017-197-080		C-CAP,S 0.01-25 K B<EZ,K>
C768	87-012-286-080		CAP, U 0.01-25
C769	87-010-260-080		CAP, ELECT 47-25V
C770	87-010-829-080		CAP, U 0.047-16
C771	87-010-383-080		CAP, ELECT 33-25V
C772	87-010-829-080		CAP, U 0.047-16
C773	87-010-196-080		CHIP CAPACITOR,0.1-25
C774	87-010-263-080		CAP, ELECT 100-10V
C775	87-010-404-080		CAP, ELECT 4.7-50V
C776	87-012-286-080		CAP, U 0.01-25<EXCEPT HR>
C777	87-010-400-080		CAP, ELECT 0.47-50V<EXCEPT EZ,K>
C777	87-010-493-080		CAP, E 0.47-50M 5L
C778	87-010-401-080		CAP, ELECT 1-50V
C779	87-010-401-080		CAP, ELECT 1-50V
C780	87-010-196-080		CHIP CAPACITOR,0.1-25
C781	87-010-405-080		CAP, ELECT 10-50V
C782	87-010-405-080		CAP, ELECT 10-50V
C783	87-012-286-080		CAP, U 0.01-25
C784	87-012-286-080		CAP, U 0.01-25
C785	87-010-494-080		CAP, E 1-50M 5L<HR>
C785	87-010-401-080		CAP, ELECT 1-50V<EXCEPT HR>
C786	87-010-494-080		CAP, E 1-50M 5L<HR>
C786	87-010-401-080		CAP, ELECT 1-50V<EXCEPT HR>
C787	87-012-275-080		C-CAP,U 1200P-50 B
C788	87-012-275-080		C-CAP,U 1200P-50 B
C789	87-012-275-080		C-CAP,U 1200P-50 B
C790	87-012-275-080		C-CAP,U 1200P-50 B
C791	87-010-405-080		CAP, ELECT 10-50V
C793	87-012-273-080		C-CAP,U 820P-50 B
C794	87-010-406-080		CAP, ELECT 22-50
C795	87-010-596-080		CAP, S 0.047-16
C796	87-010-403-080		CAP, ELECT 3.3-50V
C797	87-012-276-080		C-CAP,U 1500P-50 B<EZ,K>
C798	87-012-276-080		C-CAP,U 1500P-50 B<EZ,K>
C799	87-010-829-080		CAP, U 0.047-16
C805	87-012-286-080		CAP, U 0.01-25
C806	87-012-286-080		CAP, U 0.01-25
C812	87-012-286-080		CAP, U 0.01-25
C814	87-012-286-080		CAP, U 0.01-25<EZ,K>
C820	87-010-260-080		CAP, ELECT 47-25V
C821	87-012-286-080		CAP, U 0.01-25
C822	87-012-286-080		CAP, U 0.01-25
C823	87-012-286-080		CAP, U 0.01-25
C828	87-010-196-080		CHIP CAPACITOR,0.1-25
C829	87-010-196-080		CHIP CAPACITOR,0.1-25
C859	87-012-286-080		CAP, U 0.01-25<556EZ>
C861	87-012-199-080		C-CAP,U 220P-50 J CH<556EZ>
C862	87-012-199-080		C-CAP,U 220P-50 J CH<556EZ>
C863	87-012-270-080		C-CAP,U 470P-50 K B<556EZ>
C864	87-010-405-080		CAP, ELECT 10-50V<556EZ>
C865	87-010-196-080		CHIP CAPACITOR,0.1-25<556EZ>
C866	87-010-405-080		CAP, ELECT 10-50V<556EZ>

REF. NO.	PART NO.	KANRI NO.	DESCRIPTION
C867	87-012-286-080		CAP, U 0.01-25<556EZ>
C868	87-012-184-080		C-CAP,U 33P-50 J CH<556EZ>
C869	87-012-180-080		C-CAP,U 22P-50 J CH<556EZ>
C940	87-012-286-080		C-CAP,U 0.01-25 KB<EXCEPT V>
C941	87-012-180-080		C-CAP,U 22P-50 J CH<HR>
C942	87-012-172-080		C-CAP,U 10P-50 CH<EZ,K>
C943	87-012-286-080		C-CAP,U 0.01-25 KB<HR>
C944	87-014-051-080		CAP,PP 560P-100 J PL<HR>
C945	87-012-286-080		C-CAP,U 0.01-25 KB<HR>
C947	87-012-286-080		C-CAP,U 0.01-25 KB<EXCEPT V>
C949	87-A10-039-080		C-CAP,U 470P-50 J CH<EZ,K>
C950	87-014-073-080		CAP,PP 4700P-100J<HR>
C952	87-012-286-080		C-CAP,U 0.01-25 KB<EXCEPT V>
C953	87-012-286-080		C-CAP,U 0.01-25 KB<HR>
C954	87-012-358-080		C-CAP,S 0.47-10 ZF<HR>
C956	87-010-263-080		CAP,E 100-10M 11L<HR>
C958	87-017-197-080		C-CAP,S 0.01-25 K B<EZ,K>
C959	87-010-831-080		C-CAP,U 0.1-16 ZF<EXCEPT V>
C959	87-010-196-080		CHIP CAPACITOR,0.1-25<V>
C960	87-012-350-080		C-CAP,1-25 ZF<HR>
C960	87-010-196-080		CHIP CAPACITOR,0.1-25<EZ,K>
C961	87-012-174-080		CAP CHIP CERA SS 12P CH J
C962	87-010-401-080		CAP,E 1-50 M 11L
C963	87-010-196-080		CHIP CAPACITOR,0.1-25<V>
CF801	87-008-261-010		FILTER, SFE10.7MA5-A<EXCEPT EZ,K>
CF801	87-008-423-010		FILTER, CF SFE10.7MS3 G-A<EZ,K>
CF802	87-008-261-010		FILTER, SFE10.7MA5-A<EXCEPT EZ,K>
CF802	82-785-747-010		CF,MS2 GHY R<EZ,K>
CN701	87-A60-700-010		CONN,13P H GRY <EXCEPT 556EZ>
CN701	87-A60-650-010		CONN,16P H GRY TUC-P16X-C1<556EZ>
FFE801	A8-8ZA-190-030		8ZA-1 FEUNM<HR>
FFE801	A8-6ZA-193-130		6ZA-1 FEVNM<V>
FFE801	A8-6ZA-191-130		6ZA-1 FEENM<EZ,K>
J801	87-A60-703-010		TERMINAL,ANT3P CJ-9037<HR>
J801	87-A60-702-010		TERMINAL,ANT4P CJ-9306<V>
J940	81-754-629-010		CONNECTOR XH 2P (UL)
L771	87-A50-266-010		COIL,FM DET-2N(TOK)
L772	87-A90-052-010		FLTR,CFMT-450A(TOK)<HR>
L772	87-A90-733-010		FLTR,PCFAZH-450(TOK)<EZ,K>
L772	87-A91-110-010		FLTR,PCFJZH-450(TOK)<V>
L781	87-005-847-010		COIL,2.2UH K CECS<EZ,K>
L791	87-A50-027-010		COIL 1 POLE MPX(TOK)<EZ,K>
L792	87-A50-027-010		COIL 1 POLE MPX(TOK)<EZ,K>
L832	87-005-847-010		COIL,2.2UH K CECS<EZ,K>
L851	87-005-847-010		COIL,2.2UH K CECS<556EZ>
L941	87-A50-022-010		COIL,ANT SW(COI)7.96MHZ<HR>
L941	87-A50-020-010		COIL,ANT LW(COI)252KHZ<EZ,K>
L942	87-A50-173-010		COIL,OSC SW-N(COI)<HR>
L942	87-A50-019-010		COIL,OSC LW-N(COI)856KHZ<EZ,K>
L943	87-A50-432-010		COIL,1MH K CW<HR>
L944	87-A50-159-010		COIL,10MH K C2B<HR>
L981	88-NF8-625-110		COIL,AM PACK 3N(TOK)<HR>
L981	87-NF4-651-110		COIL,AM PACK 2N<EZ,K>
L981	8Z-ZA1-664-010		COIL,AM PACK 4N(TOK)<V>
TC941	87-011-220-080		TRIMMER,CER 20P 6.15X5.9
TC942	87-011-164-010		TRIMMER,CER 30P 4.5X3.9<EZ,K>
TC943	87-011-221-080		TRIMMER,CER 30P 6.15X5.9<HR>
X721	87-A70-061-010		VIB,XTAL 4.500MHZ CSA-309
X771	87-030-354-010		VIB,CER 450.0KHZ BFU C<HR>
X851	87-A70-091-010		VIB,XTAL 4.332MHZ CSA-309<556EZ>
DECK C.B			
CON105	87-099-753-019		CONN,11P 9604<EXCEPT HR>
CON105	87-099-756-019		CONN,15P 9604 S F<HR>
CON301	85-MA2-615-010		CONN,ASSY 3P<EXCEPT HR>
SFR1	87-024-581-019		SFR,3.3K DIA 6H
SOL1	82-ZM1-618-410		SOL ASSY,27
SOL2	82-ZM1-618-410		SOL ASSY,27
SW1	87-A90-248-019		SW,MICRO ESE11SH2CXQ
SW2	87-A90-248-019		SW,MICRO ESE11SH2CXQ
SW3	87-A90-248-019		SW,MICRO ESE11SH2CXQ
SW4	87-036-110-019		SW,MICRO SPPB62
SW5	87-036-110-019		SW,MICRO SPPB62
SW6	87-036-110-019		SW,MICRO SPPB62<HR>
SW8	87-A90-248-019		SW,MICRO ESE11SH2CXQ<HR>
SW9	87-A90-248-019		SW,MICRO ESE11SH2CXQ<HR>
W1	82-ZM3-601-019		RBN,CORD,4P-75
HEAD-1 C.B			
	85-ZM3-602-010		PWB,FLEX A
HEAD-2 C.B			
	85-ZM3-602-010		PWB,FLEX A
CON351	87-NF6-616-010		CONN ASSY,8P-RPB

TRANSISTOR ILLUSTRATION

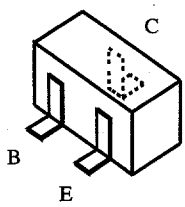

2SA1235 CMBT5551
2SC3052 CMBT5401
2SD1306 RT1N141C
2SC3906 RT1P141C
KTA1298 RT1P441C

E C B

CC5551
CSA1585

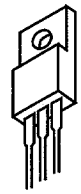

B C E

2SD2495
2SB1626

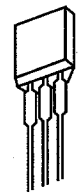

E C B

2SC4115
DTC114ES

B C E

2SB1370
2SD1933
2SB1342
FN1016
FP1016
2SB1344
2SD2025

E C B

KTA1266
KTC3198

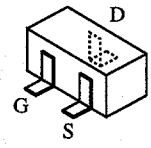

2SK2158

○チップ抵抗部品コード／CHIP RESISTOR PART CODE

チップ抵抗部品コードの成り立ち
Chip Resistor Part Coding

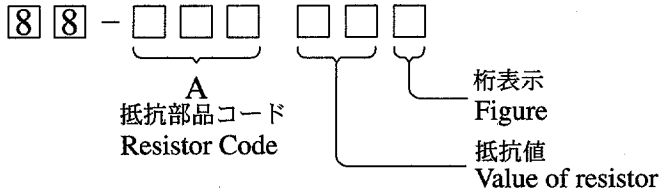

チップ抵抗
Chip resistor

容量 Wattage	種類 Type	許容誤差 Tolerance	記号 Symbol	寸法／Dimensions (mm) 外形／Form	L	W	t	抵抗コード : A Resistor Code : A
1/16W	1005	±5%	CJ	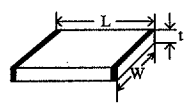	1.0	0.5	0.35	104
1/16W	1608	±5%	CJ		1.6	0.8	0.45	108
1/10W	2125	±5%	CJ		2	1.25	0.45	118
1/8W	3216	±5%	CJ		3.2	1.6	0.55	128

FL GRID ASSIGNMENT & ANODE CONNECTION

GRID ASSIGNMENT

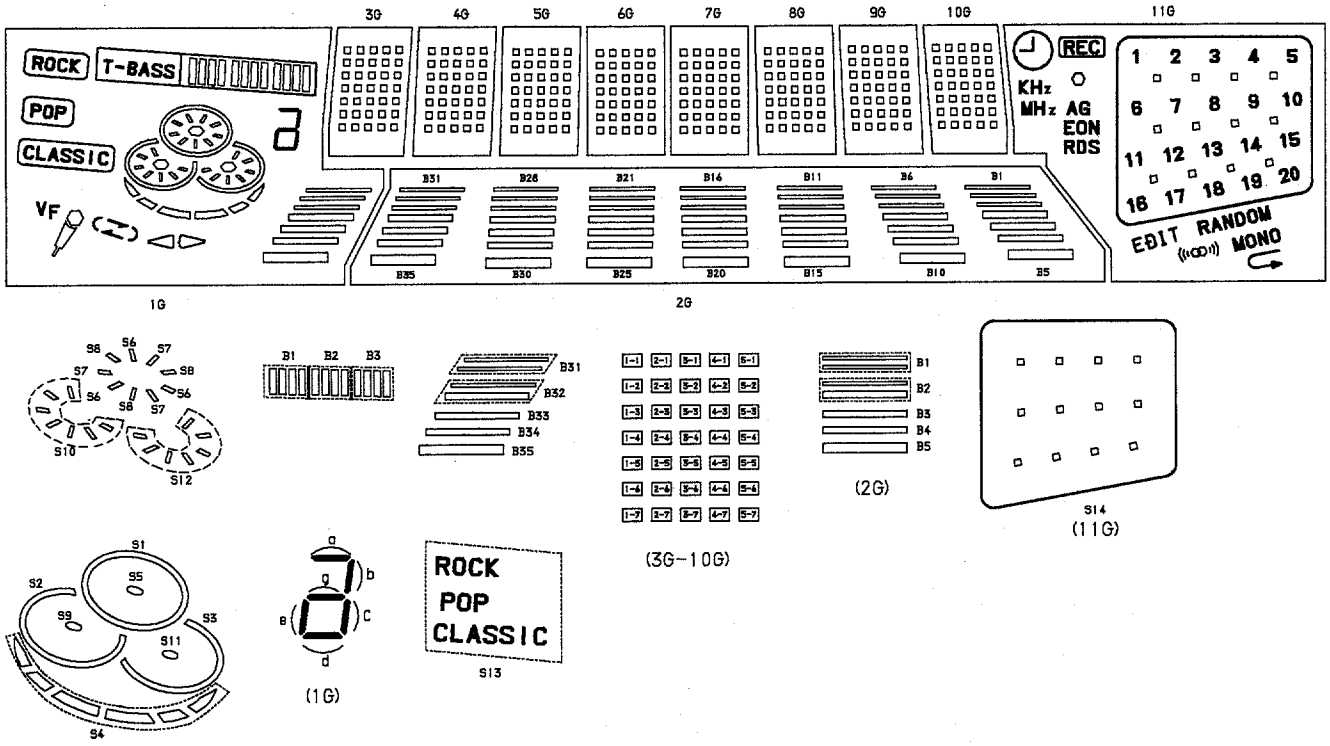

ANODE CONNECTION

	1G	2G	3G-10G	11G
P1	S13	B35	1-1	
P2	ROCK	B30	2-1	MONO
P3	POP	B25	3-1	RANDOM
P4	CLASSIC	B20	4-1	
P5	VF	B15	5-1	EDIT
P6		B10	1-2	
P7		B5	2-2	REC
P8		B34	3-2	KHz
P9		B29	4-2	MHz
P10		B24	5-2	
P11	S4	B19	1-3	AG
P12	S2	B14	2-3	EON
P13	S10	B9	3-3	RDS
P14	S9	B4	4-3	S14
P15	S3	B33	5-3	20
P16	S12	B28	1-4	19
P17	S11	B23	2-4	18
P18	S1	B18	3-4	17

	1G	2G	3G-10G	11G
P19	S6	B13	4-4	16
P20	S7	B8	5-4	15
P21	S8	B3	1-5	14
P22	S5	B32	2-5	13
P23	T-BASS	B27	3-5	12
P24	B1	B22	4-5	11
P25	B2	B17	5-5	10
P26	B3	B12	1-6	9
P27	e	B7	2-6	8
P28	a, g, d	B2	3-6	7
P29	b	B31	4-6	6
P30	c	B26	5-6	5
P31	B35	B21	1-7	4
P32	B34	B16	2-7	3
P33	B33	B11	3-7	2
P34	B32	B6	4-7	1
P35	B31	B1	5-7	-

BLOCK DIAGRAM – 1 (TUNER : HR)

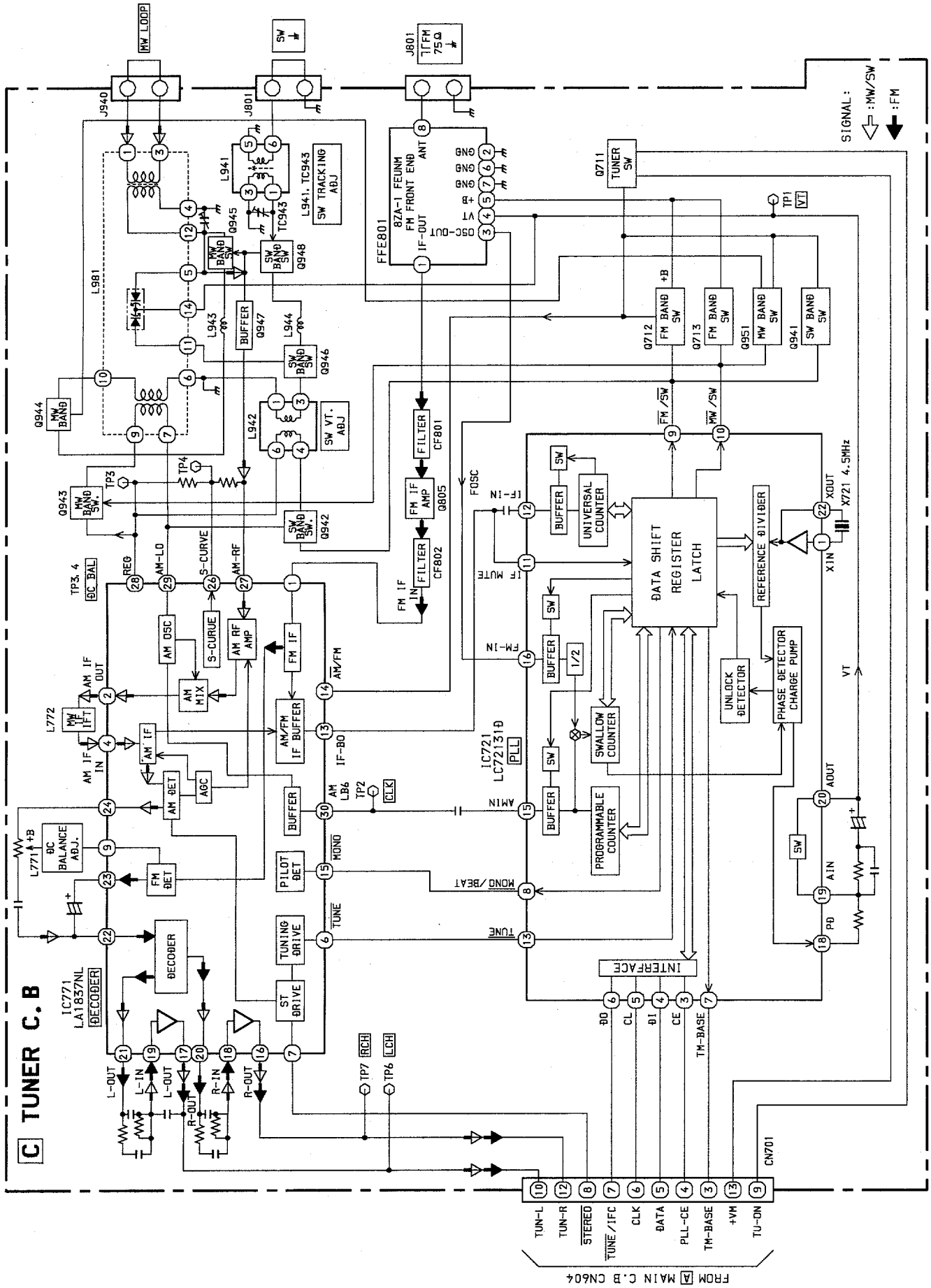

BLOCK DIAGRAM – 2 (TUNER : EZ, K)

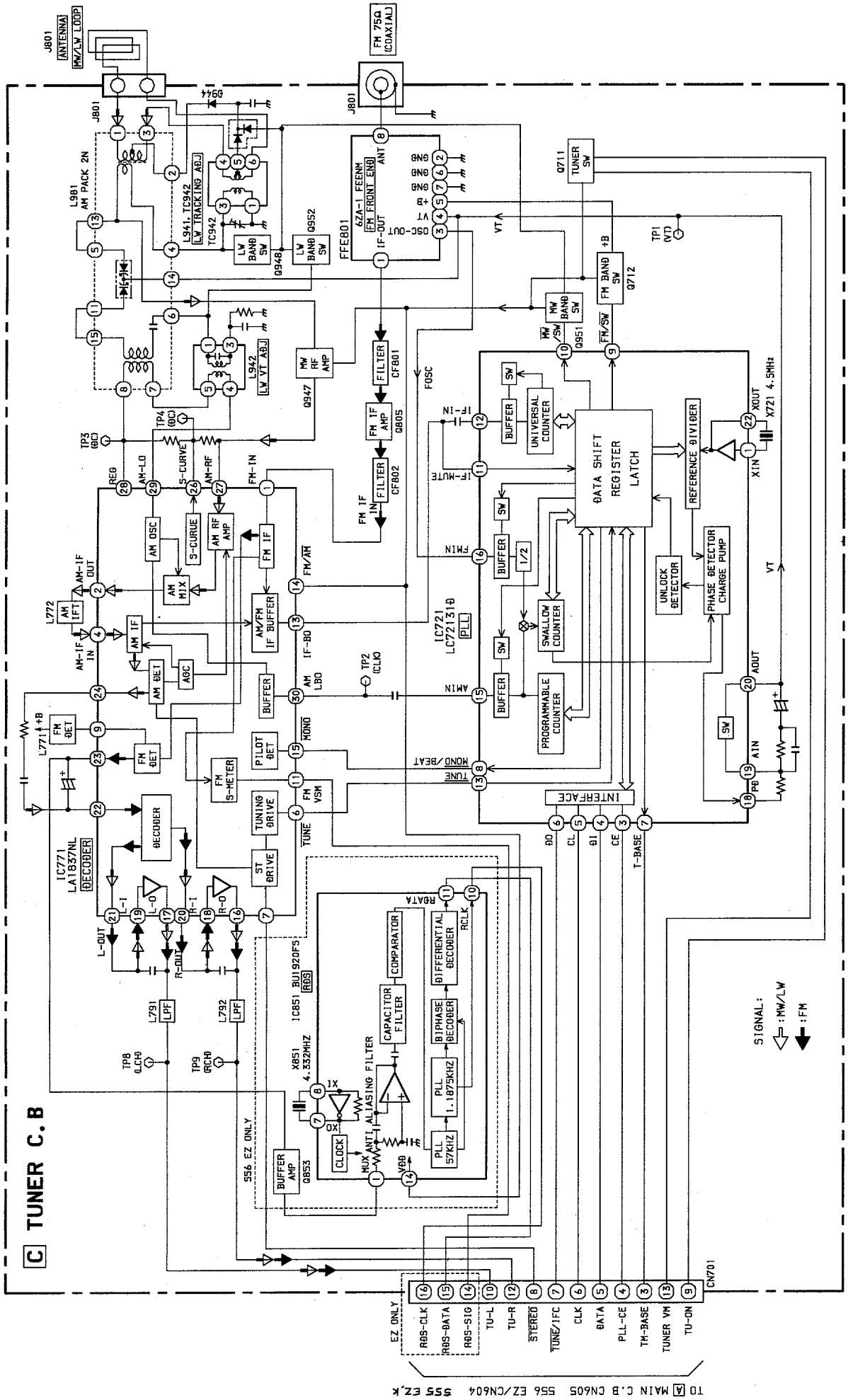

BLOCK DIAGRAM – 3 (TUNER : V)

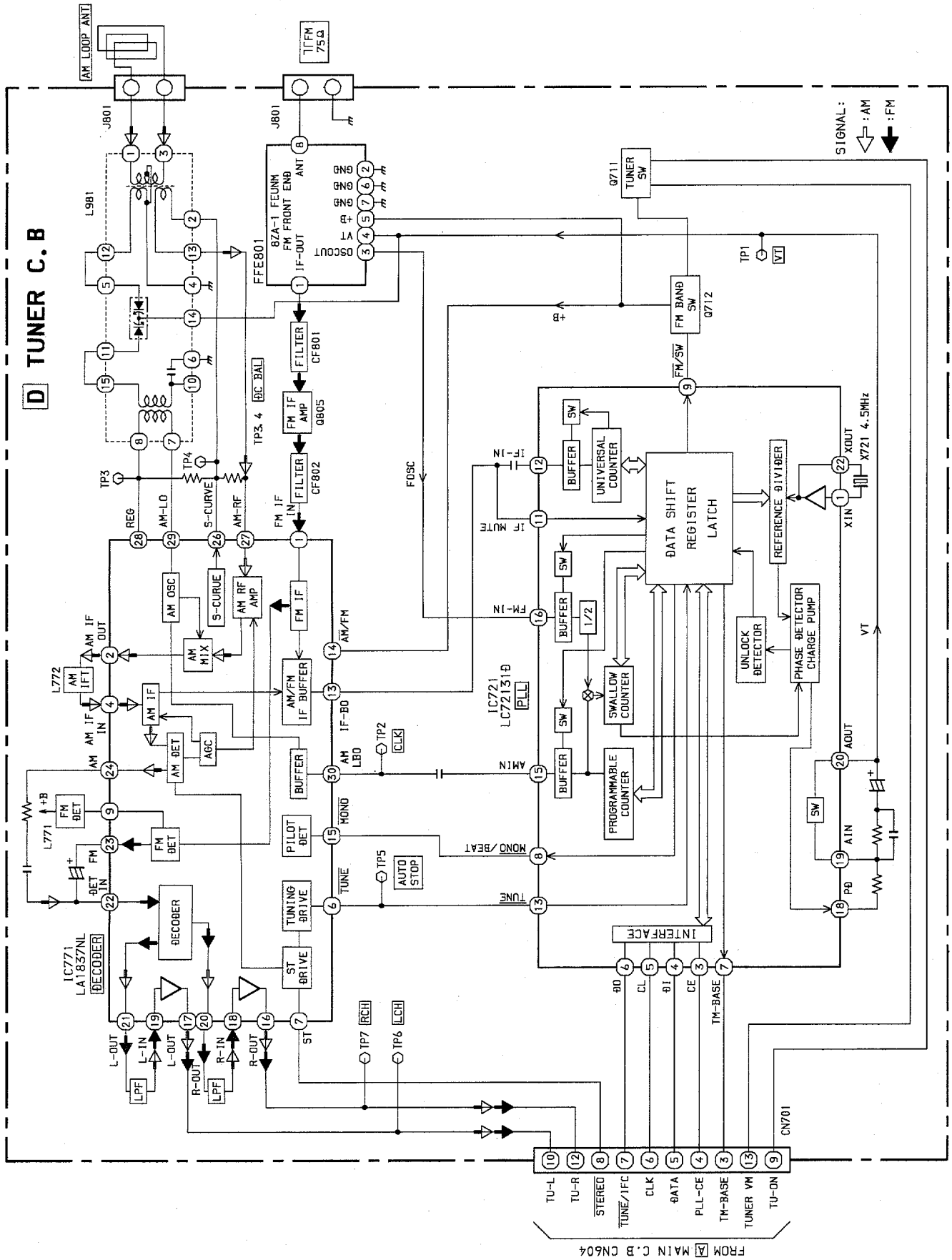

BLOCK DIAGRAM – 4 (MAIN)

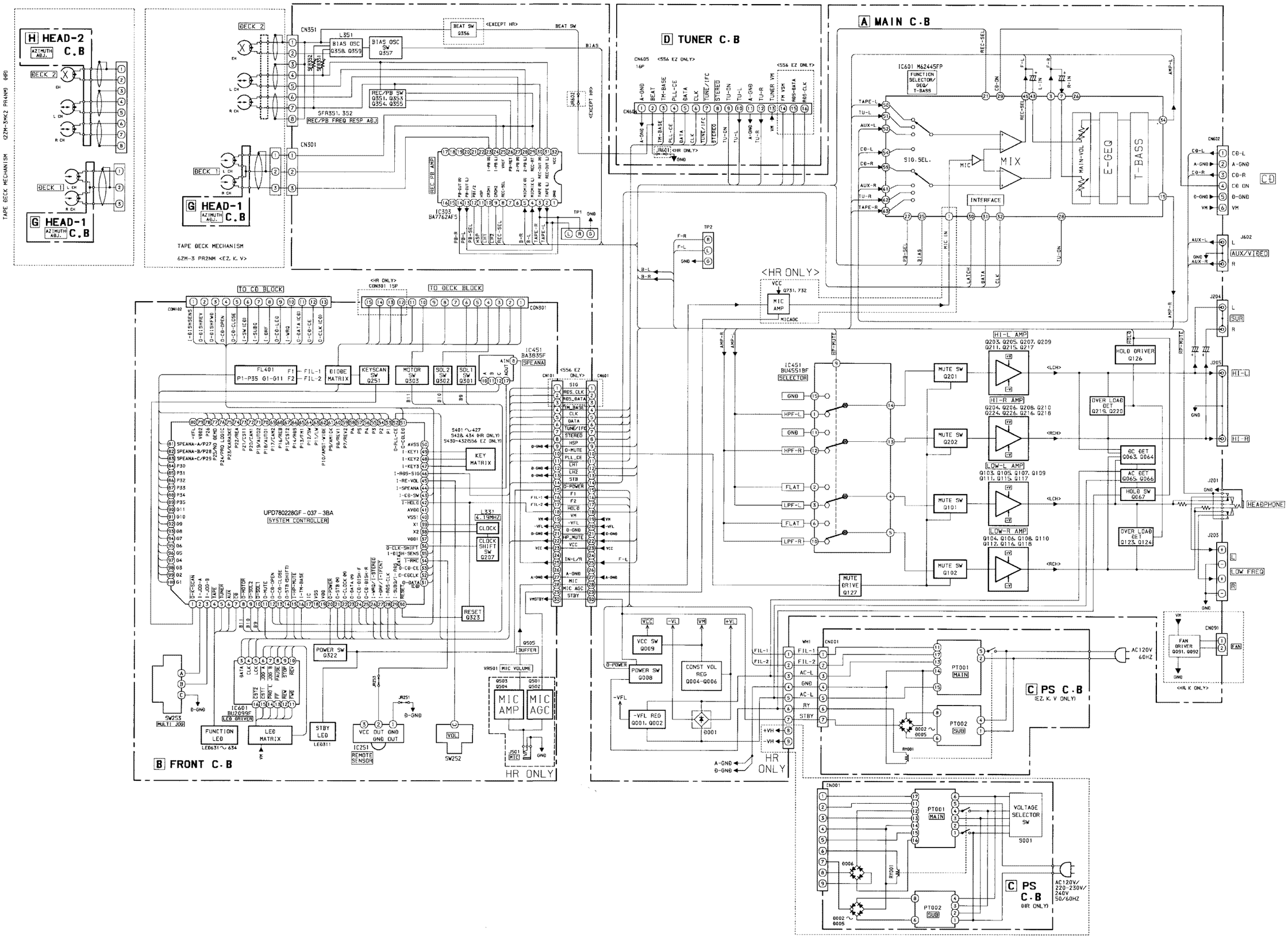

SCHEMATIC DIAGRAM – 1 (MAIN : HR)

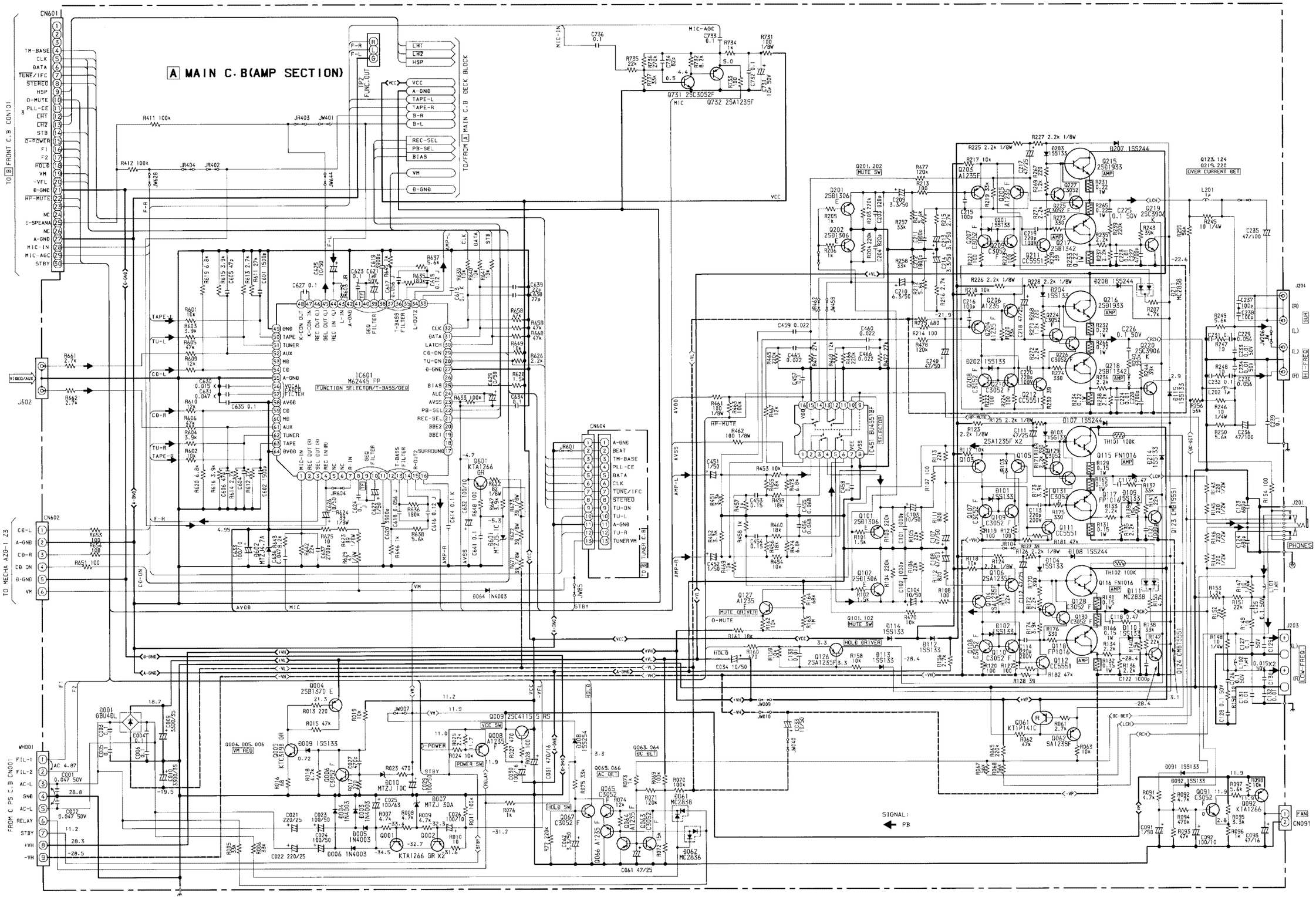

A MAIN C.B

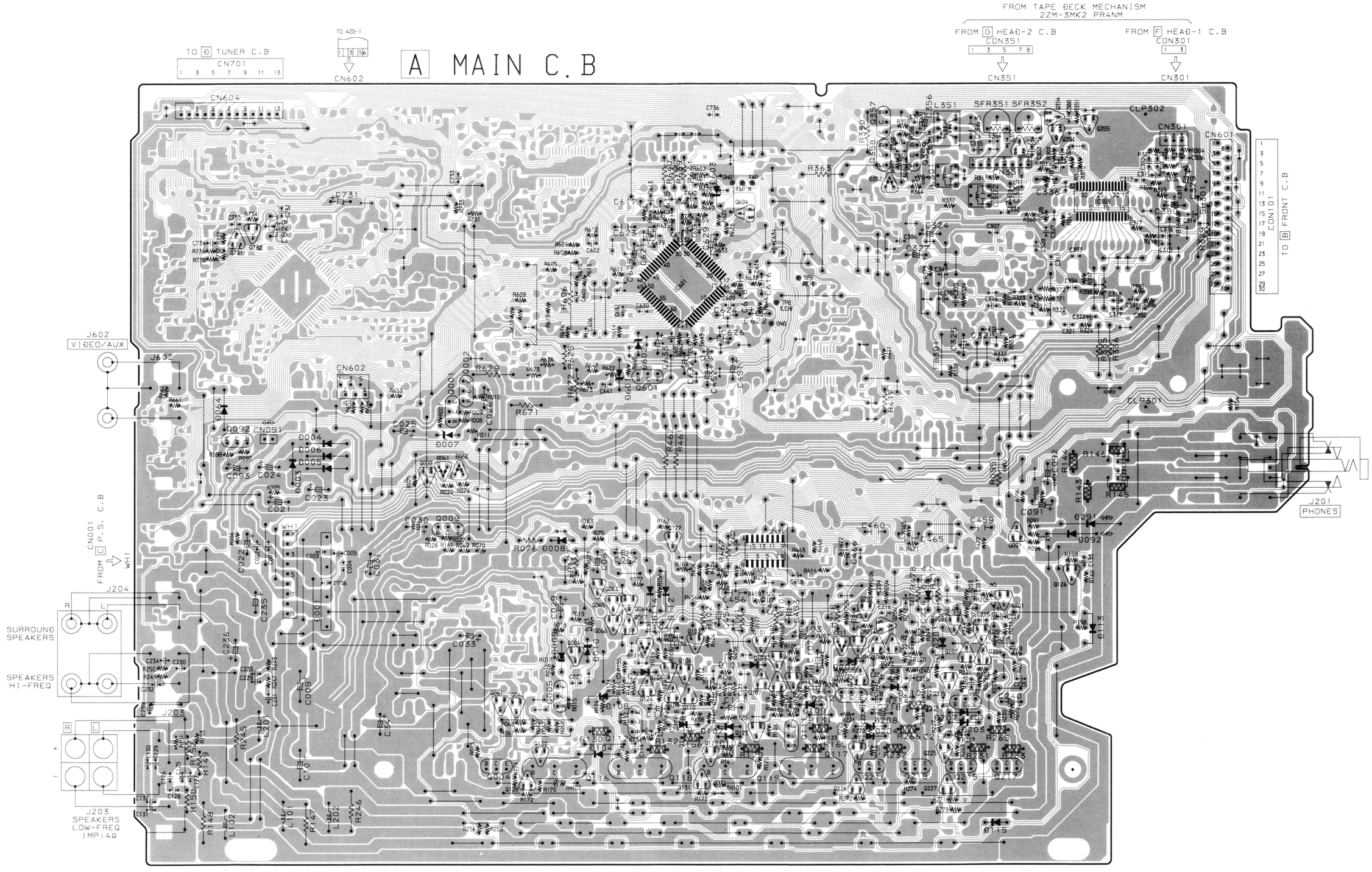
TO D TUNER C.B
CN701
TO 4ZG-1
CN602
FROM TAPE DECK MECHANISM
2ZM-3MK2 PR4NM
FROM G HEAD-2 C.B
CON351
CN351
FROM F HEAD-1 C.B
CON301
CN301
CN604
CN601
CON101
TO B FRONT C.B
J602
VIDEO/AUX
J204
SURROUND SPEAKERS
SPEAKERS HI-FREQ
J203
SPEAKERS LOW-FREQ IMP:4Ω
CN001
FROM C P.S. C.B
J201
PHONES
CLP301
CLP302
SFR351 SFR352

A MAIN C.B

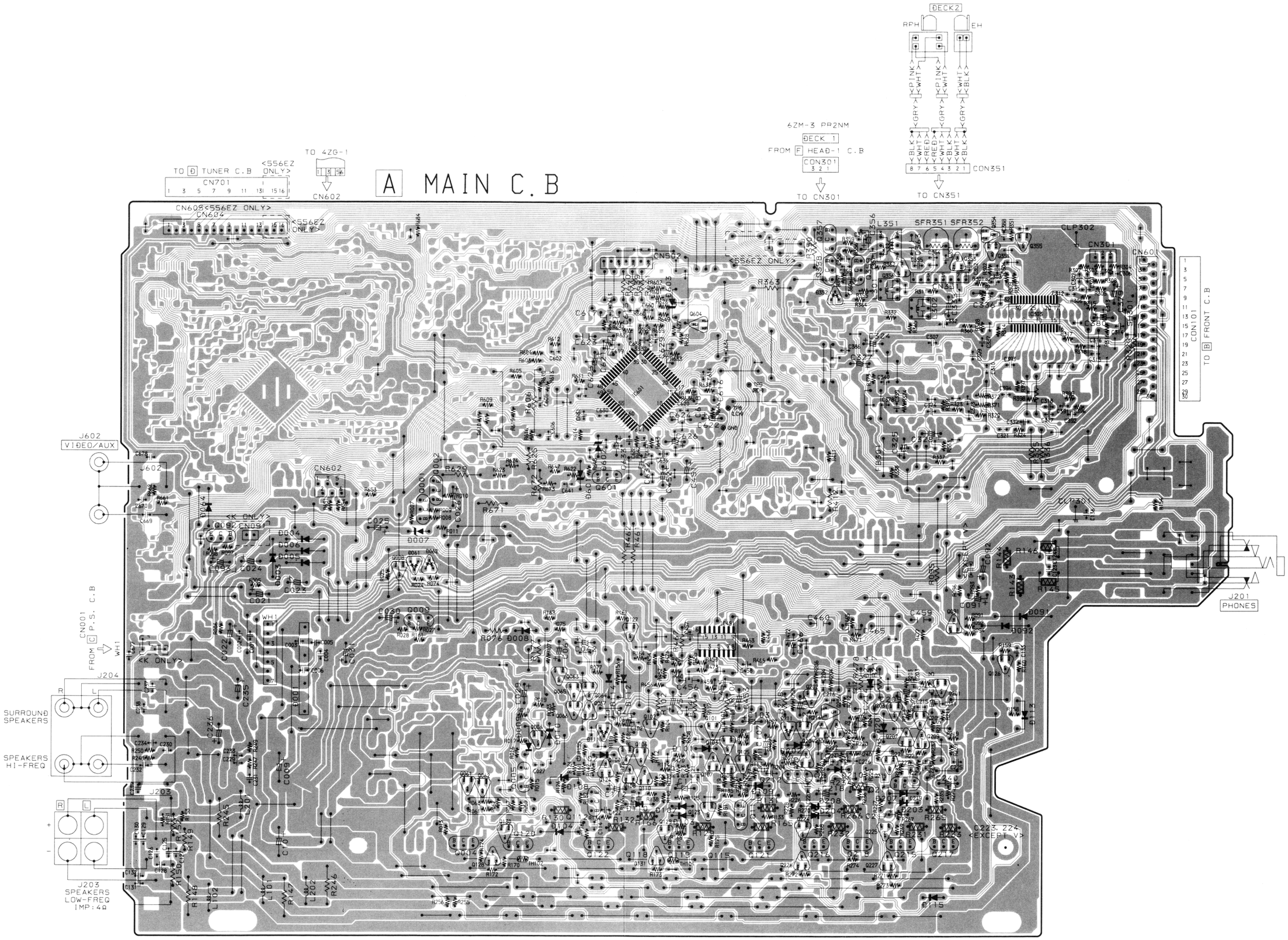
TO Ð TUNER C.B
<556EZ ONLY>
CN701
TO 4ZG-1
CN602
6ZM-3 PR2NM
ÐECK 1
FROM F HEAÐ-1 C.B
CON301
TO CN301
ÐECK2
RPH
EH
CON351
TO CN351
CN608<556EZ ONLY>
CN604
<556EZ ONLY>
<556EZ ONLY>
SFR351 SFR352
CLP302
CN301
CN601
CN101
TO B FRONT C.B
J602
VIÐEO/AUX
<K ONLY>
CN001
FROM C P.S. C.B
J204
SURROUND SPEAKERS
SPEAKERS HI-FREQ
J203
SPEAKERS LOW-FREQ IMP:4Ω
J201
PHONES
C223, Z24 <EXCEPT V>
<K ONLY>

SCHEMATIC DIAGRAM – 2 (MAIN : EZ, K, V)

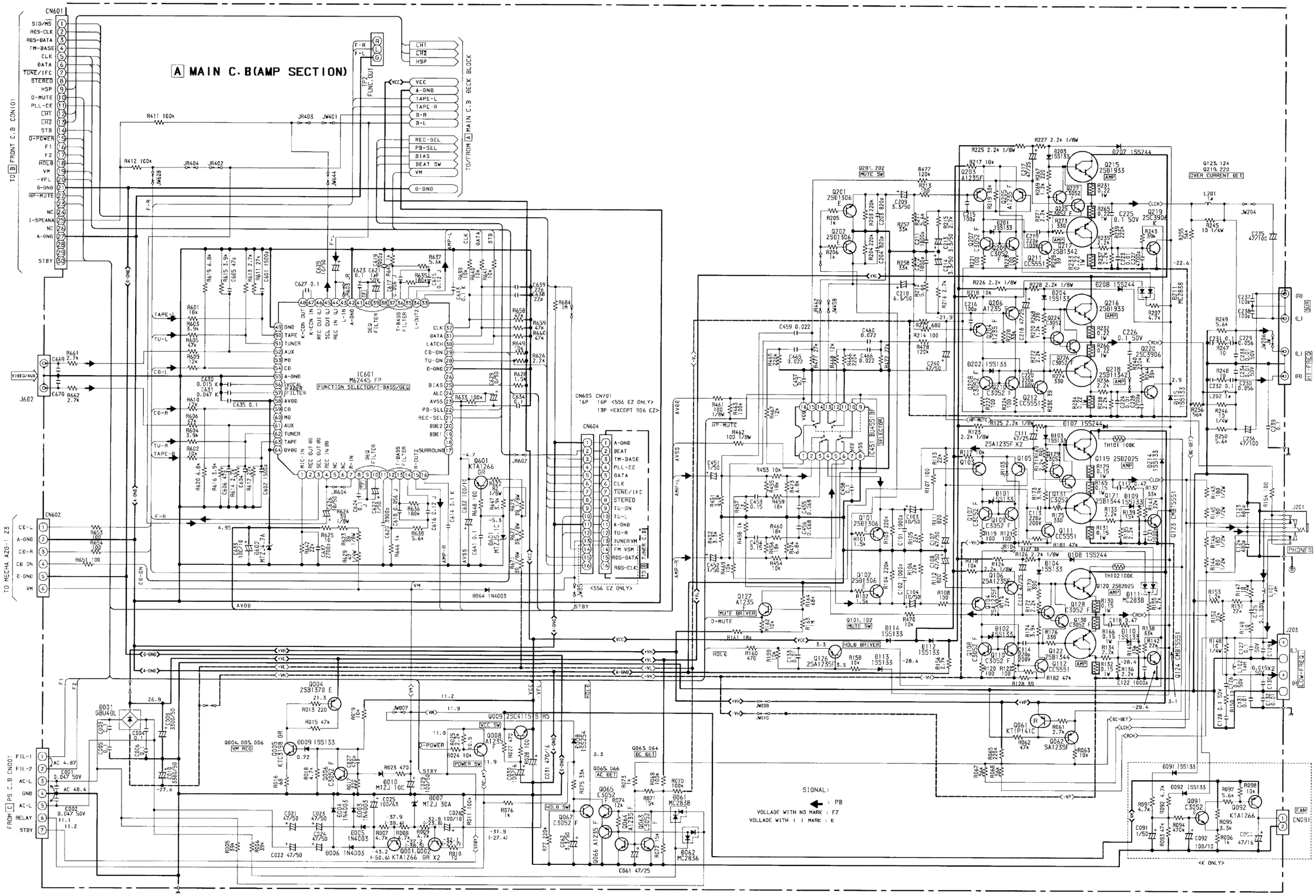

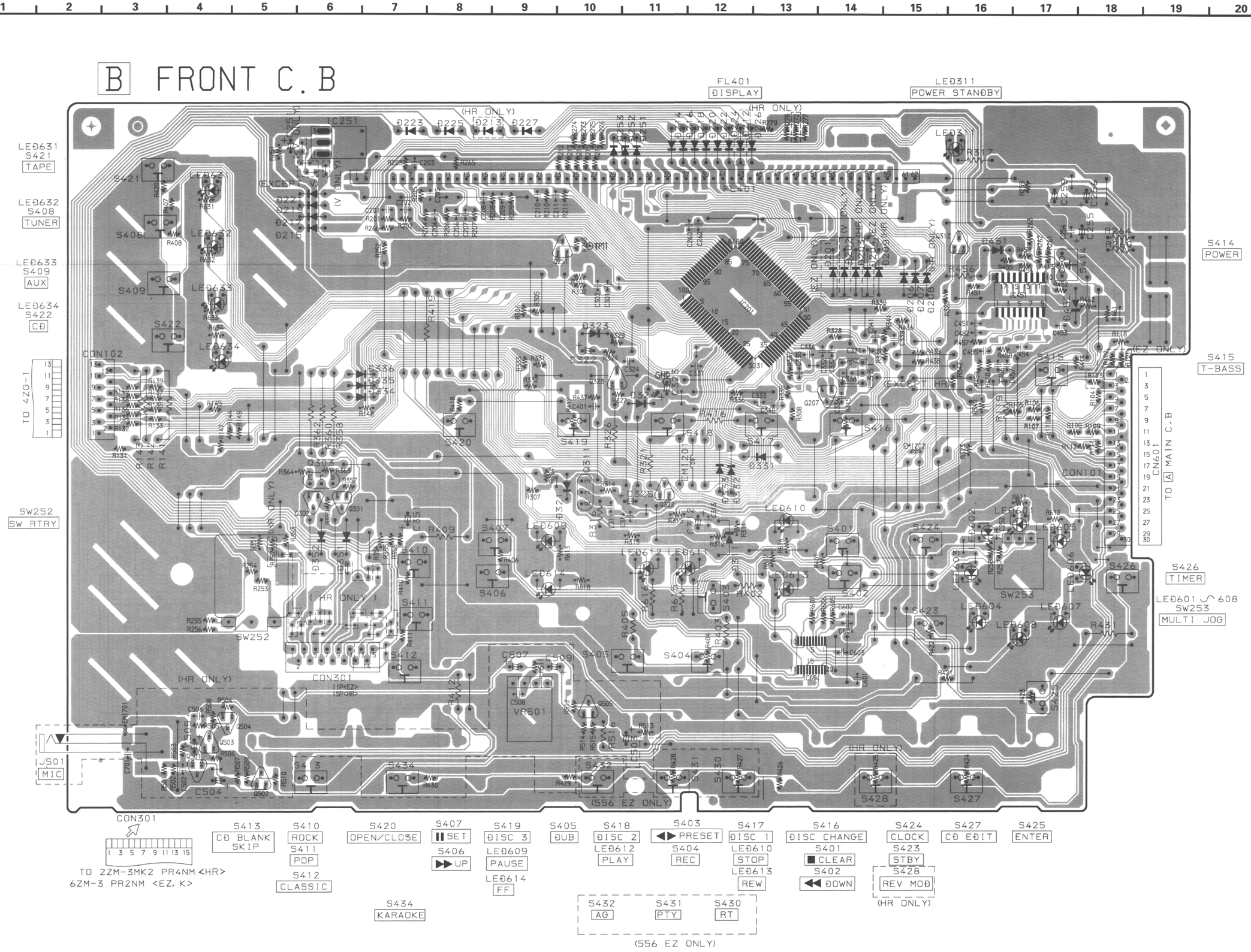
B FRONT C.B
FL401
DISPLAY
LED311
POWER STANDBY
LED631
S421
TAPE
LED632
S408
TUNER
LED633
S409
AUX
LED634
S422
CD
TO 4ZG-1
SW252
SW RTRY
S414
POWER
S415
T-BASS
CN601
TO A MAIN C.B
S426
TIMER
LED601 ∽ 608
SW253
MULTI JOG
J501
MIC
CON301
TO 2ZM-3MK2 PR4NM <HR>
6ZM-3 PR2NM <EZ, K>
S413
CD BLANK SKIP
S410
ROCK
S411
POP
S412
CLASSIC
S420
OPEN/CLOSE
S434
KARAOKE
S407
SET
S406
UP
S419
DISC 3
LED609
PAUSE
LED614
FF
S405
DUB
S418
DISC 2
LED612
PLAY
S403
PRESET
S404
REC
S417
DISC 1
LED610
STOP
LED613
REW
S416
DISC CHANGE
S401
CLEAR
S402
DOWN
S424
CLOCK
S423
STBY
S428
REV MOD
(HR ONLY)
S427
CD EDIT
S425
ENTER
S432
AG
S431
PTY
S430
RT
(556 EZ ONLY)

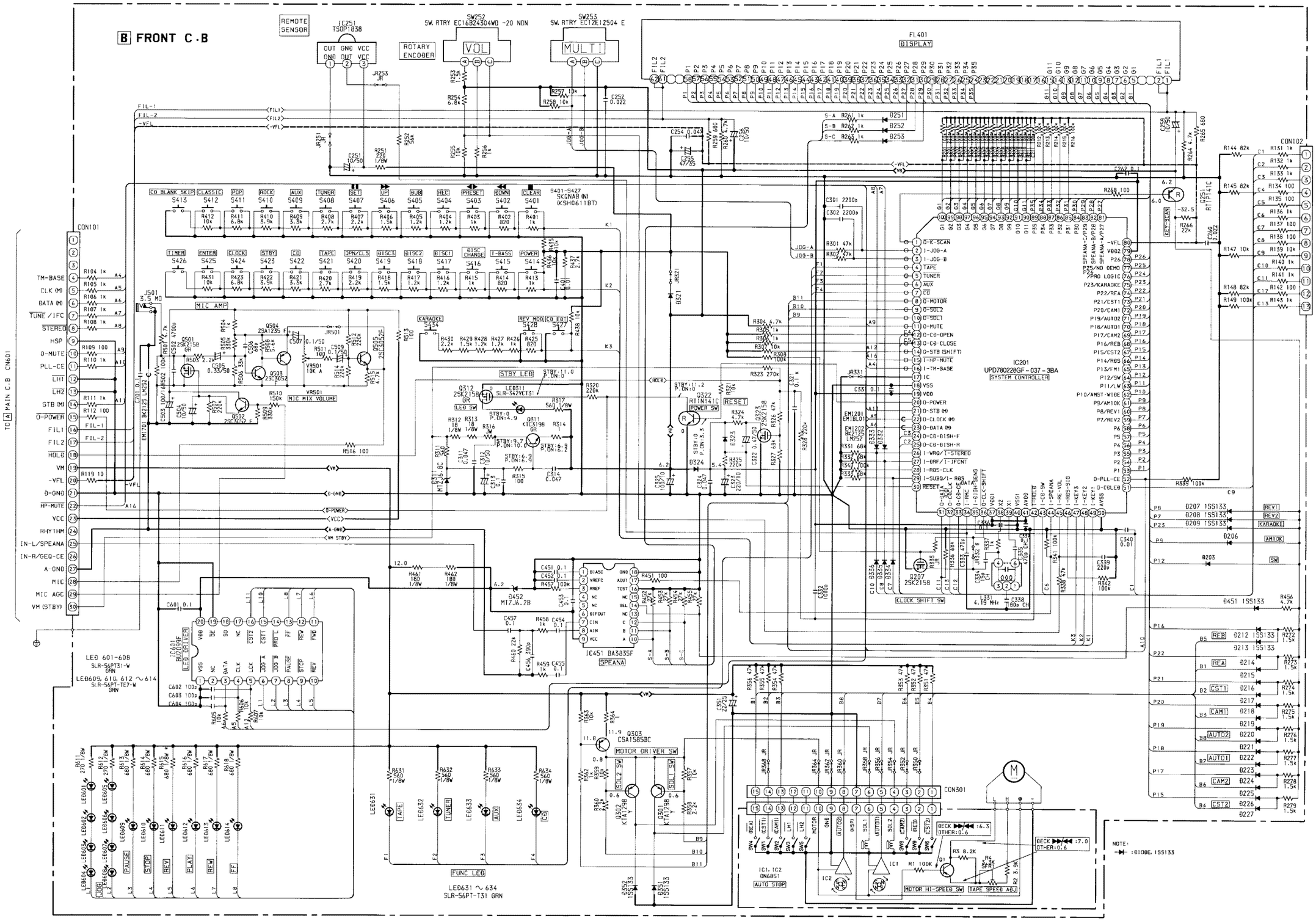
B FRONT C.B
REMOTE SENSOR
IC251 TSOP1838
OUT GND VCC
ROTARY ENCODER
SW252 SW.RTRY EC16BZ4304W0 -20 NON
VOL
SW253 SW.RTRY EC12E12504 E
MULTI
FL401 DISPLAY
CON101
CON102
IC201 UPD78026GF-037-3BA SYSTEM CONTROLLER
CD BLANK SKIP
CLASSIC
POP
ROCK
AUX
TUNER
SET
UP
DUB
HLC
PRESET
DOWN
CLEAR
S401-S427 SKQNAB (N) (KSH0611BT)
TIMER
ENTER
CLOCK
STBY
CD
TAPE
OPN/CLS
DISC3
DISC2
DISC1
DISC CHANGE
T-BASS
POWER
MIC AMP
MIC MIX VOLUME
KARAOKE
REV MDB
CD EBT
STBY LED
LED SW
POWER SW
RESET
CLOCK SHIFT SW
MOTOR DRIVER SW
SDL2 SW
SDL1 SW
LED601-608 SLR-56PT31-W GRN
LED609, 610, 612 ~ 614 SLR-56PT-TE7-W GRN
LED631 ~ 634 SLR-56PT-T31 GRN
FUNC LED
IC451 BA5835F SPEANA
IC1, IC2 BN6851 AUTO STOP
MOTOR HI-SPEED SW
TAPE SPEED ADJ
CON301
NOTE:
TO A MAIN C.B CN601
TO 4G-1 Z3

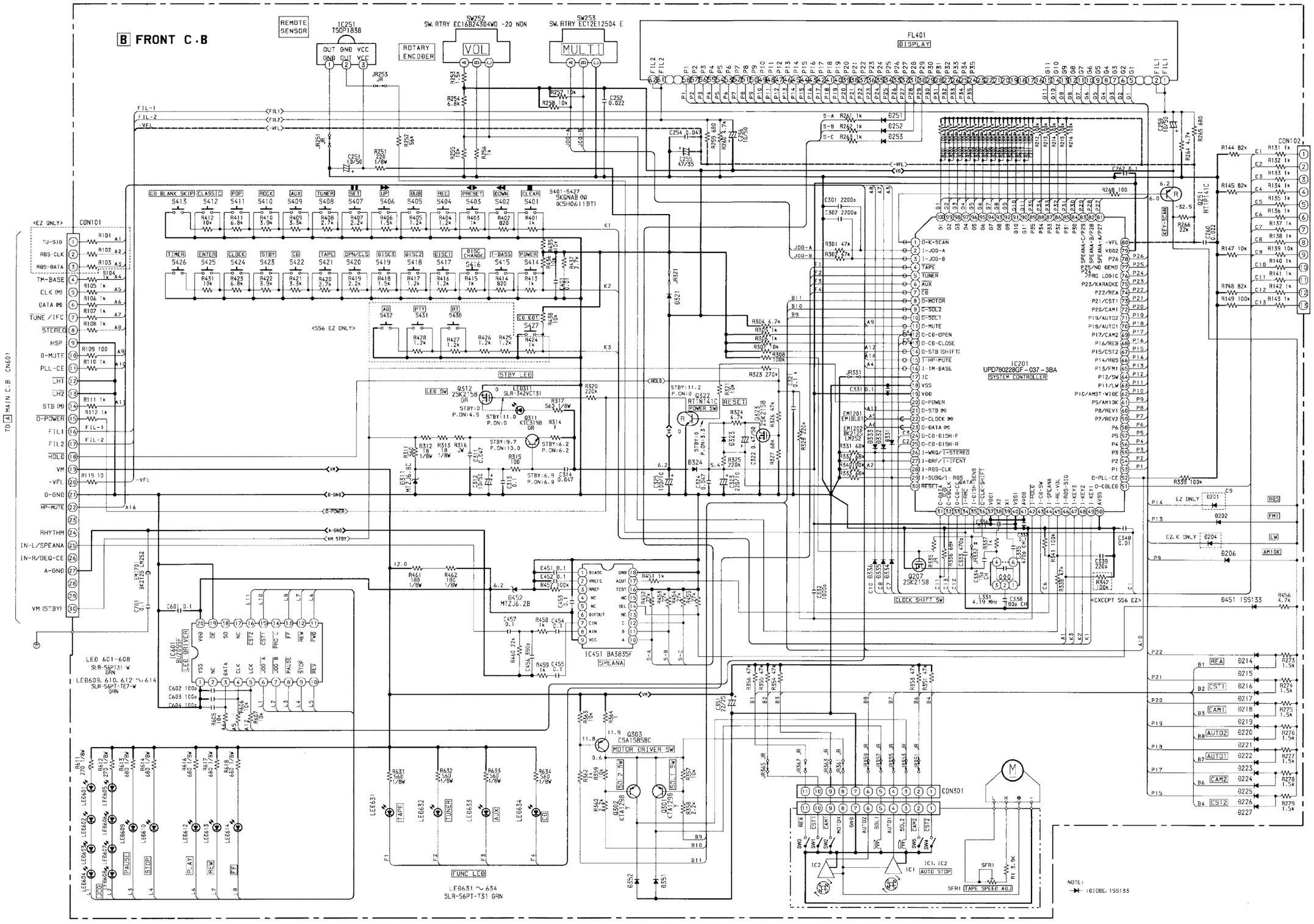
B FRONT C.B
REMOTE SENSOR
IC251 TSOP1838
ROTARY ENCODER
SW252 SW RTRY EC16B24304W0 -20 NON
VOL
SW253 SW RTRY EC12E12504 E
MULTI
FL401 DISPLAY
S401-S427 SKQNAB (N) (KSH0611BT)
CON101
CON102
IC201 UPD780228GF-037-3BA SYSTEM CONTROLLER
IC451 BA3835F SPEANA
IC601 BU2055F LED DRIVER
CON301
TO A MAIN C.B CN601
LED 601-608 SLR-56PT31-W GRN
LED609, 610, 612 ~ 614 SLR-56PT-TE7-W GRN
FUNC LED
LED631 ~ 634 SLR-56PT-T31 GRN
MOTOR DRIVER SW
RESET
POWER SW
CLOCK SHIFT SW
TAPE SPEED ADJ
AUTO STOP
NOTE:
: 01DBE 1SS133
10 420-1 ZS

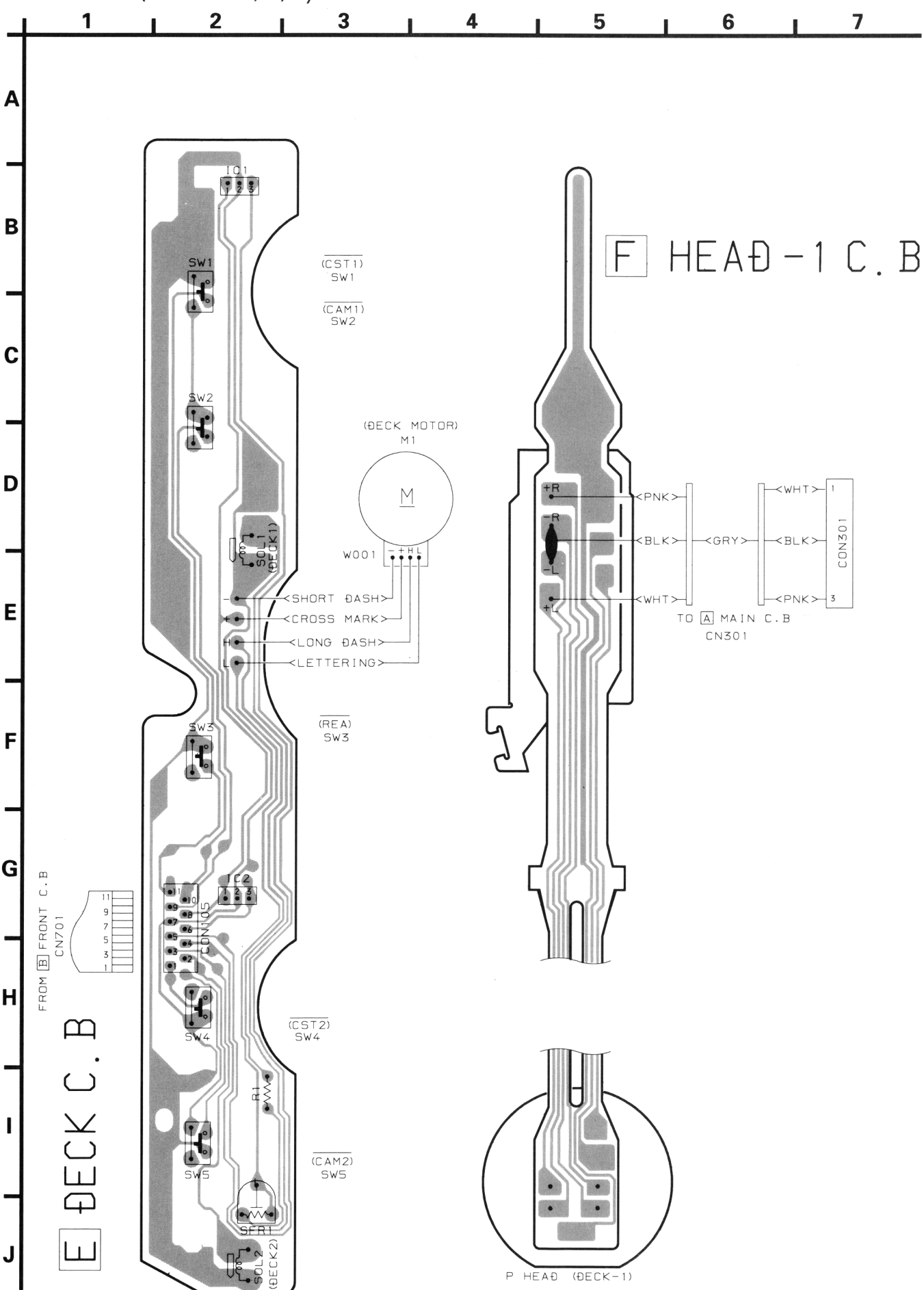
1
2
3
4
5
6
7
A
B
C
D
E
F
G
H
I
J
E DECK C.B
F HEAD-1 C.B
IC1
SW1
(CST1)
SW1
(CAM1)
SW2
SW2
(DECK MOTOR)
M1
M
W001
SOL1
(DECK1)
SHORT DASH
CROSS MARK
LONG DASH
LETTERING
SW3
(REA)
SW3
IC2
CON105
FROM B FRONT C.B
CN701
SW4
(CST2)
SW4
R1
SW5
(CAM2)
SW5
SER1
SOL2
(DECK2)
+R
-R
-L
+L
PNK
BLK
GRY
WHT
WHT
BLK
PNK
CON301
TO A MAIN C.B
CN301
P HEAD (DECK-1)

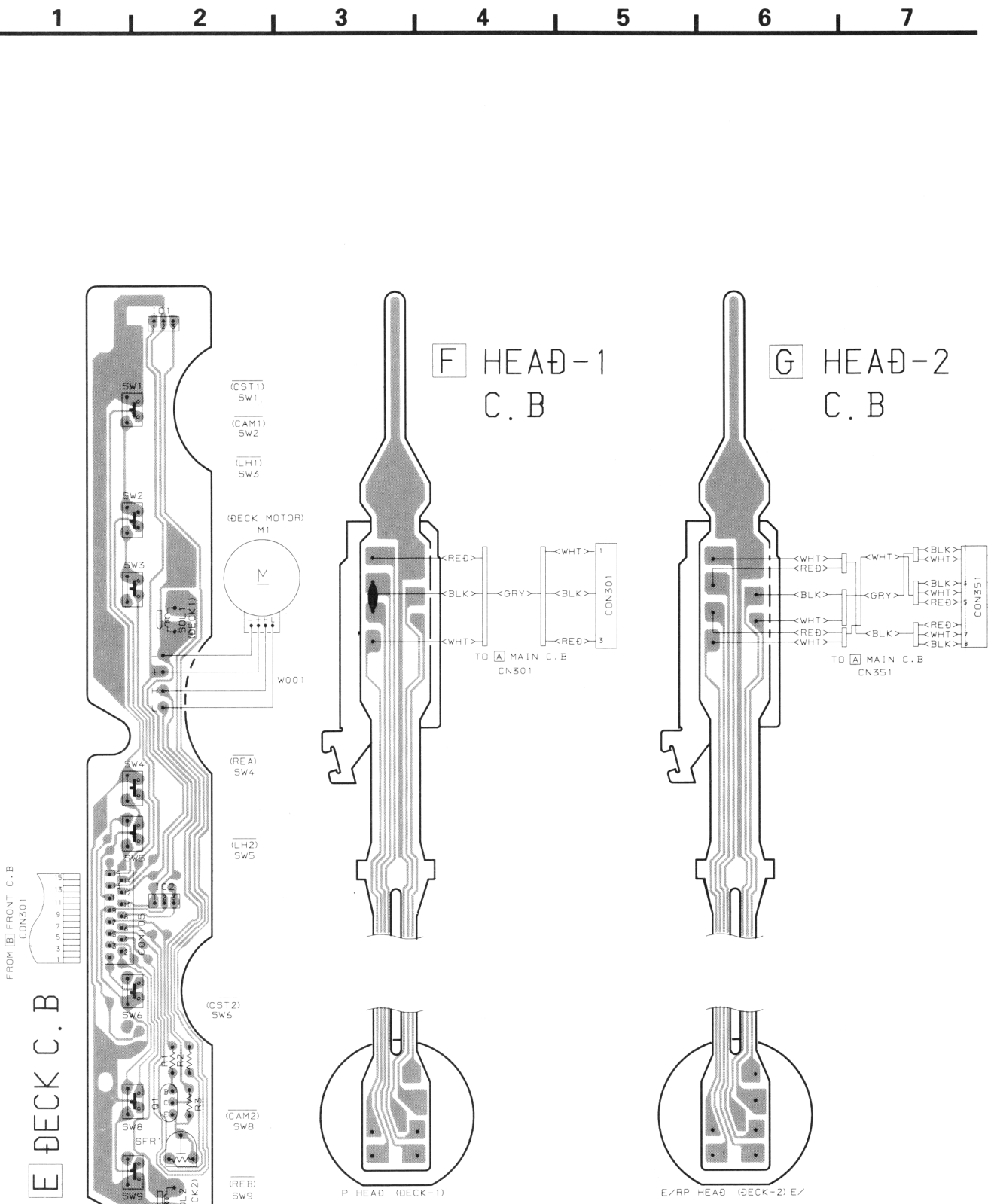
1
2
3
4
5
6
7
A
B
C
D
E
F
G
H
I
J
E DECK C.B
F HEAD-1 C.B
G HEAD-2 C.B
(CST1) SW1
(CAM1) SW2
(LH1) SW3
(DECK MOTOR) M1
(REA) SW4
(LH2) SW5
(CST2) SW6
(CAM2) SW8
(REB) SW9
W001
FROM B FRONT C.B CON301
TO A MAIN C.B CN301
TO A MAIN C.B CN351
P HEAD (DECK-1)
E/RP HEAD (DECK-2) E/

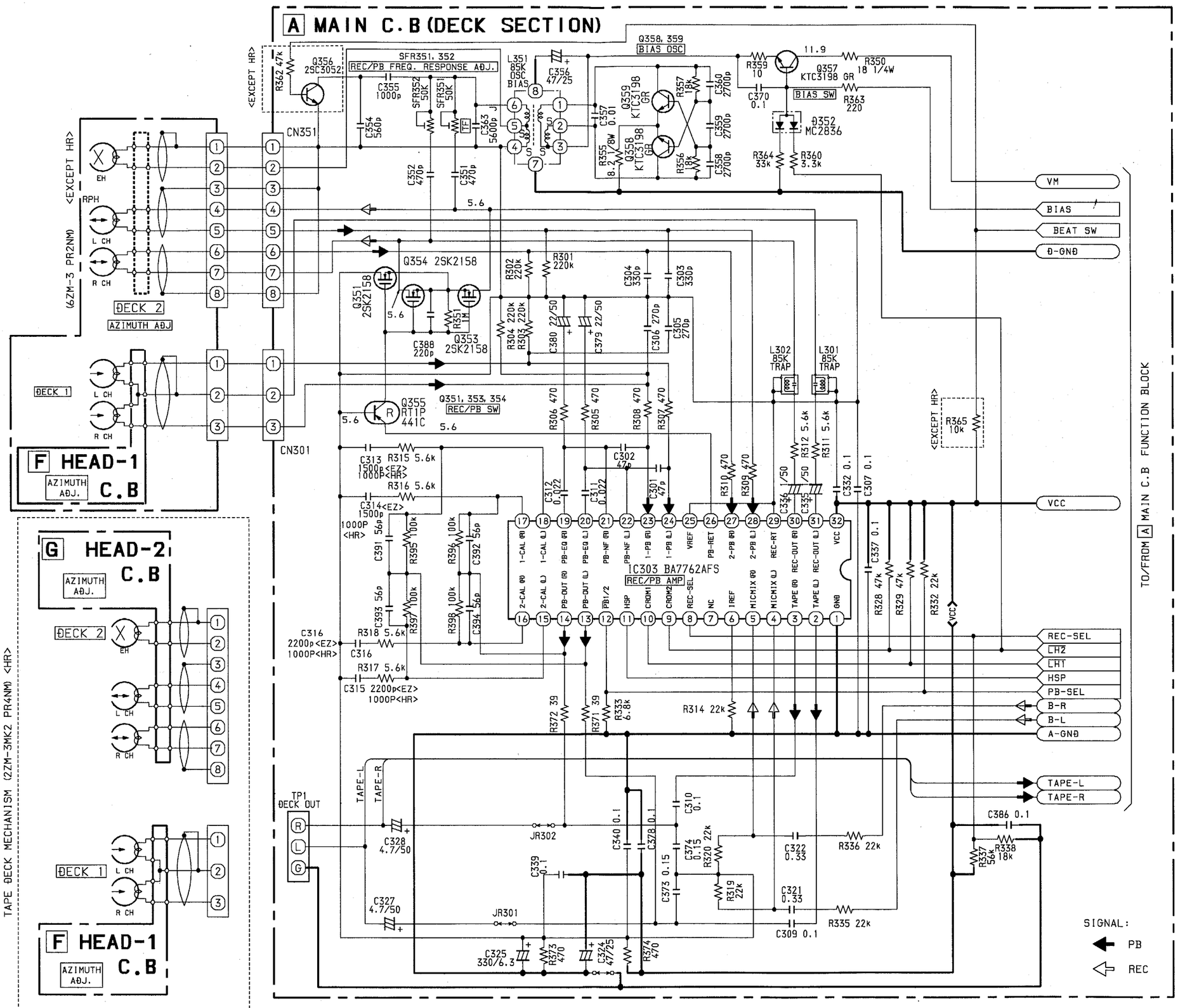
A MAIN C.B (DECK SECTION)
<EXCEPT HR>
R362 47k
Q356 2SC3052
SFR351, 352
REC/PB FREQ. RESPONSE ADJ.
C355 1000p
SFR352 50k
SFR351 50k
C354 5600p
C363 5600p
TF
CN351
L351 85K OSC BIAS
C356 47/25
Q358, 359 BIAS OSC
R359 10
Q357 KTC3198 GR
R350 18 1/4W
C370 0.1
BIAS SW
R363 220
Ð352 MC2836
Q359 KTC3198 GR
R357 18k
C360 2700p
C357 0.01
R355 8.2 1/8W
Q358 KTC3198 GR
R356 18k
C359 2700p
C358 2700p
R364 33k
R360 3.3k
C352 470p
C351 470p
5.6
VM
BIAS
BEAT SW
Ð-GNÐ
<EXCEPT HR>
(6ZM-3 PR2NM)
EH
RPH
L CH
R CH
ÐECK 2
AZIMUTH AÐJ
Q354 2SK2158
Q351 2SK2158
R302 220k
R301 220k
C304 330p
C303 330p
R304 220k
R303 220k
C380 22/50
C379 22/50
C306 270p
C305 270p
R351 1M
C388 220p
Q353 2SK2158
ÐECK 1
L CH
R CH
F HEAD-1
AZIMUTH AÐJ.
C.B
CN301
Q355 RT1P 441C
Q351, 353, 354
REC/PB SW
5.6
R306 470
R305 470
R308 470
R307 470
L302 85K TRAP
L301 85K TRAP
<EXCEPT HR>
R365 10k
C313 1500p<EZ> 1000P<HR>
R315 5.6k
R316 5.6k
C314<EZ> 1500p
1000P <HR>
C302 47p
C312 0.022
C311 0.022
C301 47p
R310 470
R309 470
R312 5.6k
R311 5.6k
C336 1/50
C335 1/50
C332 0.1
C307 0.1
C337 0.1
C391 56p
R395 100k
R396 100k
C392 56p
C393 56p
R397 100k
R398 100k
C394 56p
IC303 BA7762AFS
REC/PB AMP
2-CAL (R)
2-CAL (L)
1-CAL (R)
1-CAL (L)
PB-OUT (R)
PB-OUT (L)
PB-EQ (R)
PB-EQ (L)
PB1/2
HSP
CROM1
CROM2
REC-SEL
NC
IREF
MICMIX (R)
MICMIX (L)
TAPE (R)
TAPE (L)
GNÐ
PB-NF (R)
PB-NF (L)
1-PB (R)
1-PB (L)
2-PB (R)
2-PB (L)
VREF
PB-RET
REC-RT
REC-OUT (R)
REC-OUT (L)
VCC
R328 47k
R329 47k
R332 22k
C316 2200p<EZ> 1000P<HR>
R318 5.6k
C316
R317 5.6k
C315 2200p<EZ> 1000P<HR>
R372 39
R371 39
R333 6.8k
R314 22k
REC-SEL
LH2
LH1
HSP
PB-SEL
B-R
B-L
A-GNÐ
TAPE-L
TAPE-R
TP1 ÐECK OUT
C328 4.7/50
JR302
C340 0.1
C378 0.1
C310 0.1
C339 0.1
C374 0.15
R320 22k
C322 0.33
R336 22k
C386 0.1
R338 18k
R337 56k
C373 0.15
R319 22k
C321 0.33
C309 0.1
R335 22k
C327 4.7/50
JR301
C325 330/6.3
R323 470
C324 47/25
R374 470
SIGNAL:
PB
REC
TO/FROM A MAIN C.B FUNCTION BLOCK
TAPE ÐECK MECHANISM (ZZM-3MK2 PR4NM) <HR>
G HEAD-2
AZIMUTH AÐJ.
C.B
ÐECK 2
EH
L CH
R CH
ÐECK 1
L CH
R CH
F HEAD-1
AZIMUTH AÐJ.
C.B

SCHEMATIC DIAGRAM – 6 (TUNER : HR)

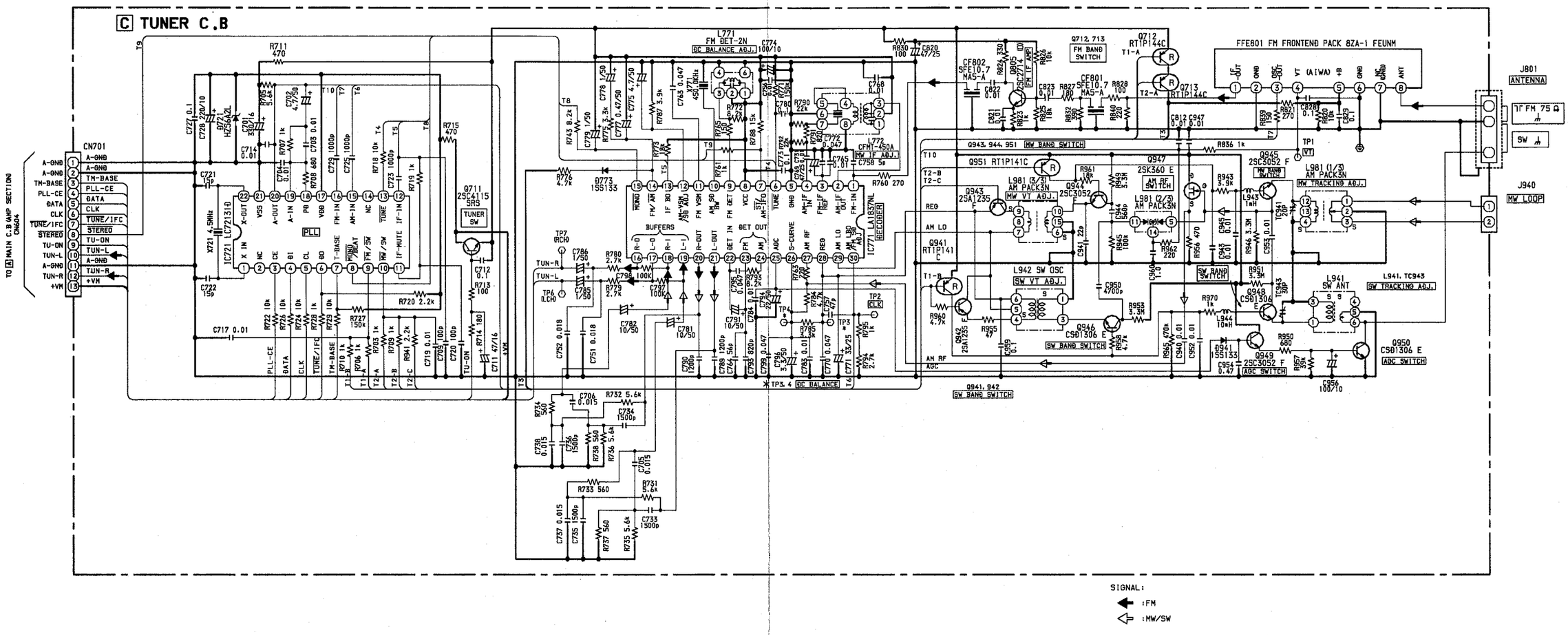

SIGNAL:
- ⬅ :FM
- ⇦ :MW/SW

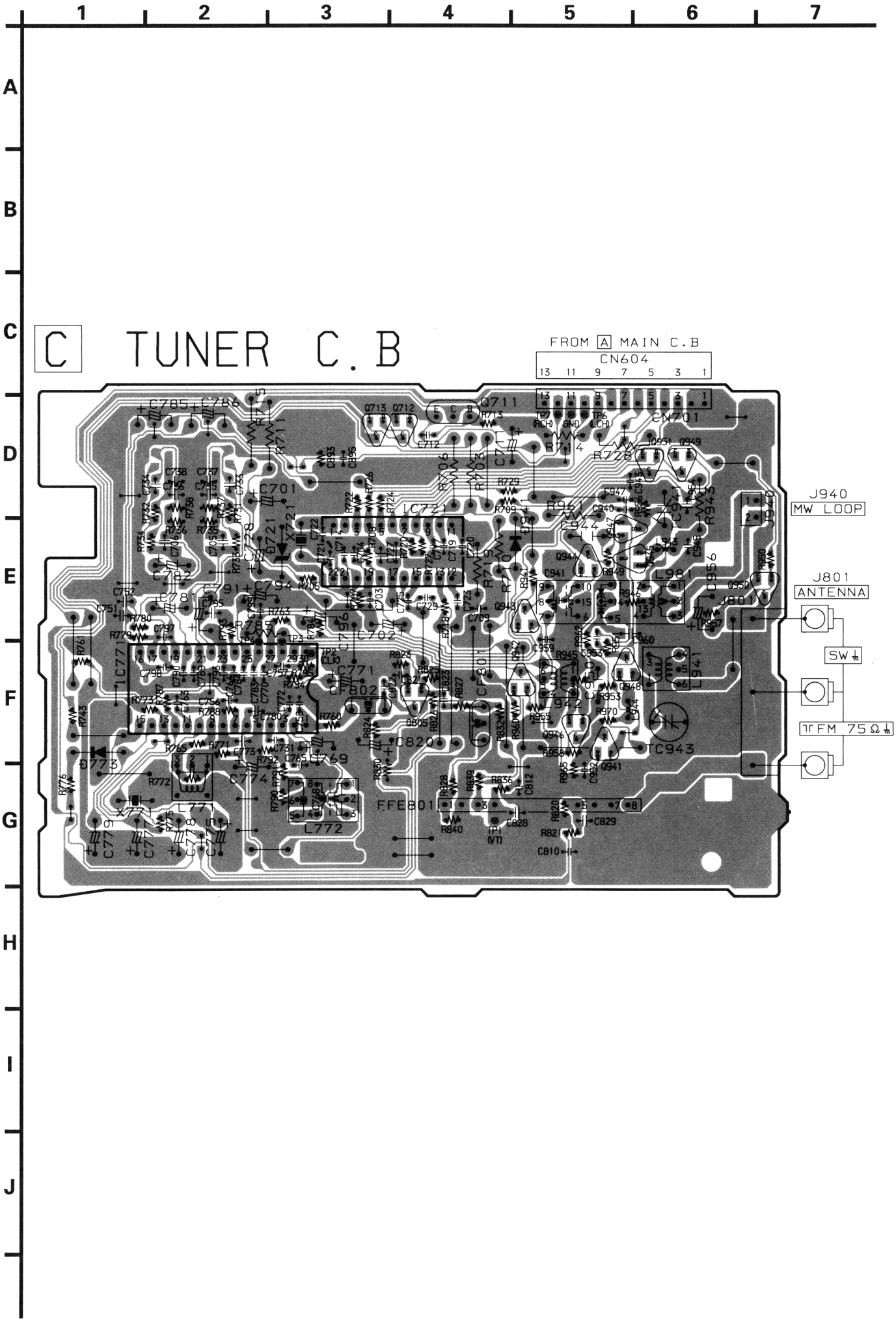
1
2
3
4
5
6
7
A
B
C
D
E
F
G
H
I
J
C TUNER C.B
FROM A MAIN C.B
CN604
13 11 9 7 5 3 1
J940
MW LOOP
J801
ANTENNA
SW
FM 75Ω
C785 C786
Q711
Q713 Q712
CN701
R728
C701
IC721
X721
D721
C728
C791 C794
C782
C781
C752
C751
IC771
C771
CF802
C702
C820
D773
C774
X771
L771
L772
L769
FFE801
TP1 (VT)
C810
C829
C828
R840
R821
R820
C812
R836
R829
R839
R832
R960
R958
R953
R945
R948
R946
R949
R951
R943
C944
C956
L981
L941
L942
L944
C943
Q941
Q942
Q943
Q946
Q948
Q949
Q950
Q951
C940
C941
C947
C945
C953
C952
C959
C957
R963
R962
R970
R955
R954
R957
R960
R952
R950
R947
R944
R941
R942
R940
R938
R937
R936
R935
R934
R933
R932
R931
R930
R929
R928
R927
R926
R925
R924
R923
R922
R921
R920
R919
R918
R917
R916
R915
R914
R913
R912
R911
R910
R909
R908
R907
R906
R905
R904
R903
R902
R901
R900
R899
R898
R897
R896
R895
R894
R893
R892
R891
R890
R889
R888
R887
R886
R885
R884
R883
R882
R881
R880
R879
R878
R877
R876
R875
R874
R873
R872
R871
R870
R869
R868
R867
R866
R865
R864
R863
R862
R861
R860
R859
R858
R857
R856
R855
R854
R853
R852
R851
R850
R849
R848
R847
R846
R845
R844
R843
R842
R841
R840
R839
R838
R837
R836
R835
R834
R833
R832
R831
R830
R829
R828
R827
R826
R825
R824
R823
R822
R821
R820
R819
R818
R817
R816
R815
R814
R813
R812
R811
R810
R809
R808
R807
R806
R805
R804
R803
R802
R801
R800
R799
R798
R797
R796
R795
R794
R793
R792
R791
R790
R789
R788
R787
R786
R785
R784
R783
R782
R781
R780
R779
R778
R777
R776
R775
R774
R773
R772
R771
R770
R769
R768
R767
R766
R765
R764
R763
R762
R761
R760
R759
R758
R757
R756
R755
R754
R753
R752
R751
R750
R749
R748
R747
R746
R745
R744
R743
R742
R741
R740
R739
R738
R737
R736
R735
R734
R733
R732
R731
R730
R729
R728
R727
R726
R725
R724
R723
R722
R721
R720
R719
R718
R717
R716
R715
R714
R713
R712
R711
R710
R709
R708
R707
R706
R705
R704
R703
R702
R701
R700
C799
C798
C797
C796
C795
C794
C793
C792
C791
C790
C789
C788
C787
C786
C785
C784
C783
C782
C781
C780
C779
C778
C777
C776
C775
C774
C773
C772
C771
C770
C769
C768
C767
C766
C765
C764
C763
C762
C761
C760
C759
C758
C757
C756
C755
C754
C753
C752
C751
C750
C749
C748
C747
C746
C745
C744
C743
C742
C741
C740
C739
C738
C737
C736
C735
C734
C733
C732
C731
C730
C729
C728
C727
C726
C725
C724
C723
C722
C721
C720
C719
C718
C717
C716
C715
C714
C713
C712
C711
C710
C709
C708
C707
C706
C705
C704
C703
C702
C701
C700
D893
D895
D773
D721
L981
L941
L942
L944
L771
L772
L769
IC771
IC721
CF802
FFE801
X771
X721
TP1
TP2
TP3
CN701
CN604
J940
J801
SW
FM 75Ω

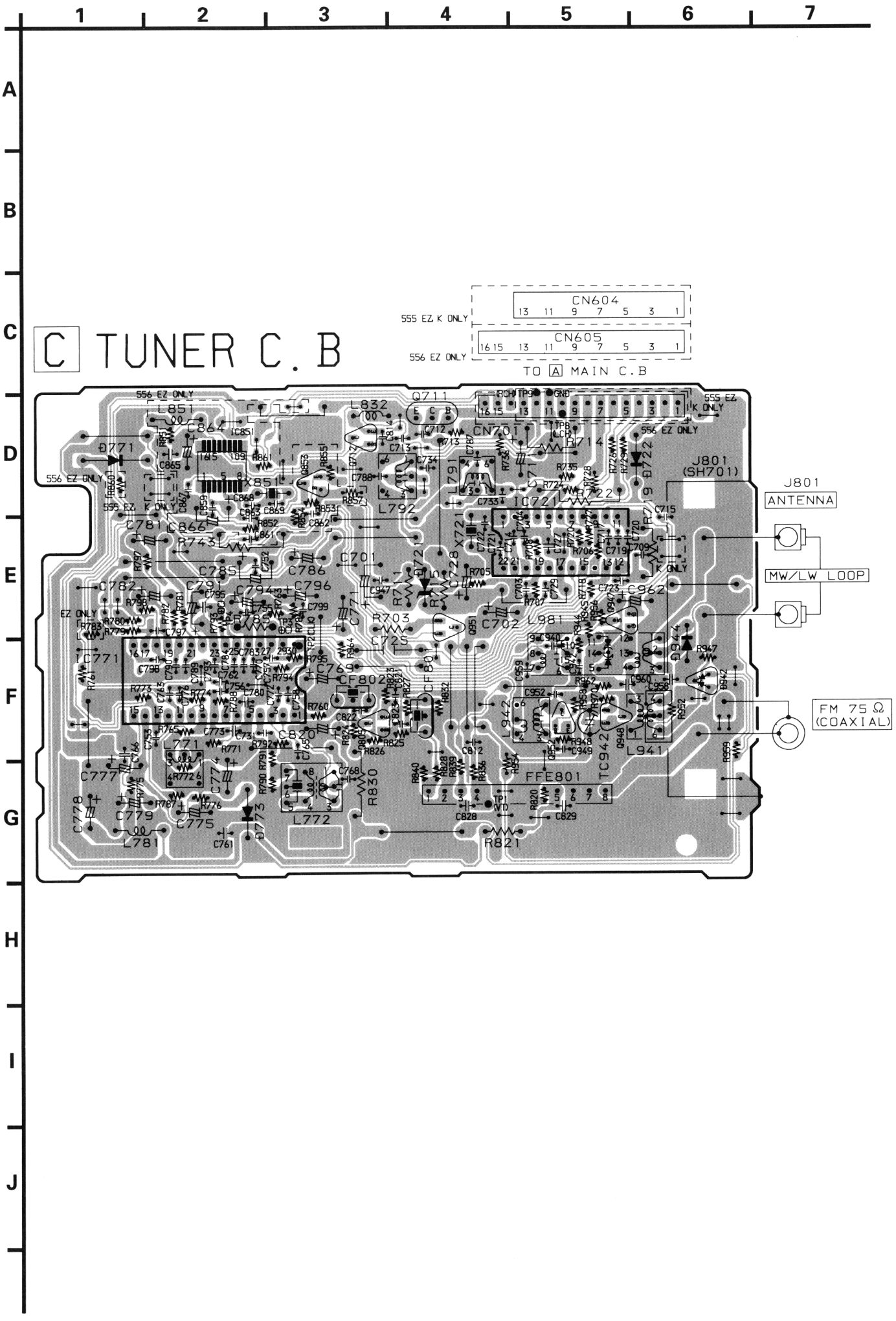
1
2
3
4
5
6
7
A
B
C
D
E
F
G
H
I
J
C TUNER C. B
CN604
13 11 9 7 5 3 1
555 EZ, K ONLY
CN605
16 15 13 11 9 7 5 3 1
556 EZ ONLY
TO A MAIN C.B
J801
(SH701)
J801
ANTENNA
MW/LW LOOP
FM 75 Ω
(COAXIAL)
556 EZ ONLY
555 EZ, K ONLY
IC721
IC771
IC851
Q711
TC942
FFE801
X851
X721
L781
L772
L792
L791
L832
L851
L941
L942
L981
D771
D773
D722
D744
CF801
CF802
CN701

SCHEMATIC DIAGRAM – 7 (TUNER : EZ, K)

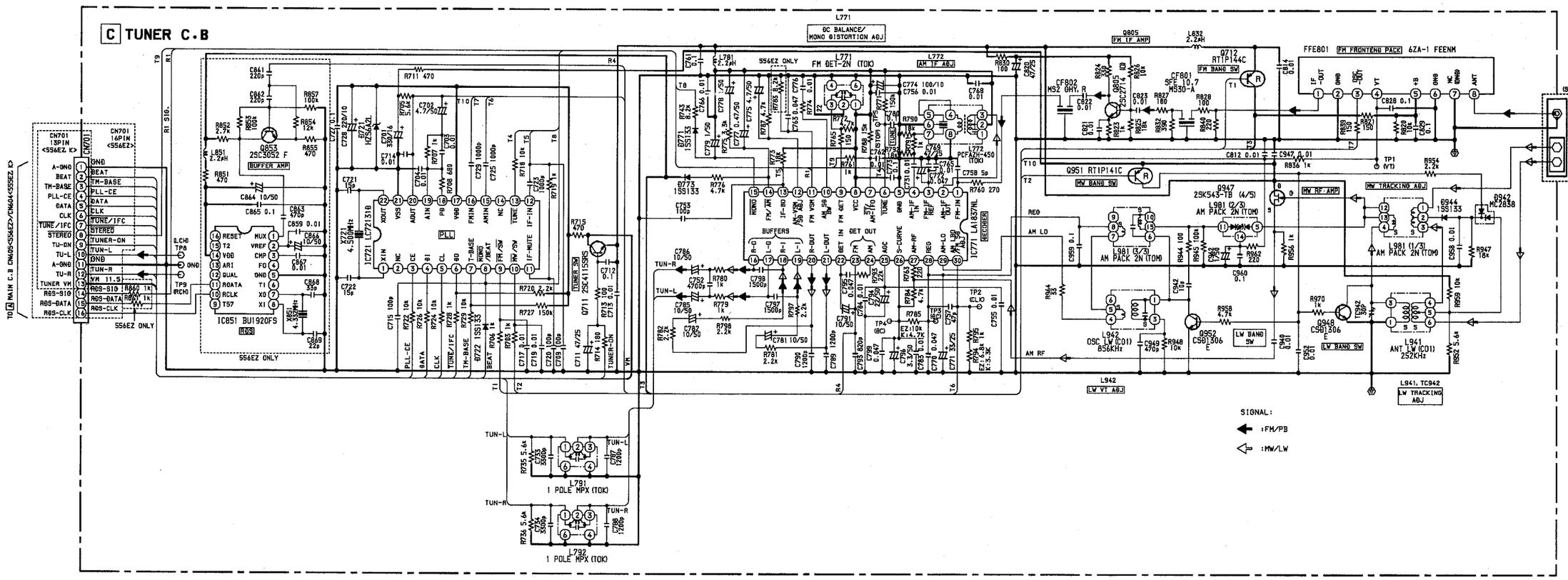

SCHEMATIC DIAGRAM – 8 (TUNER : V)

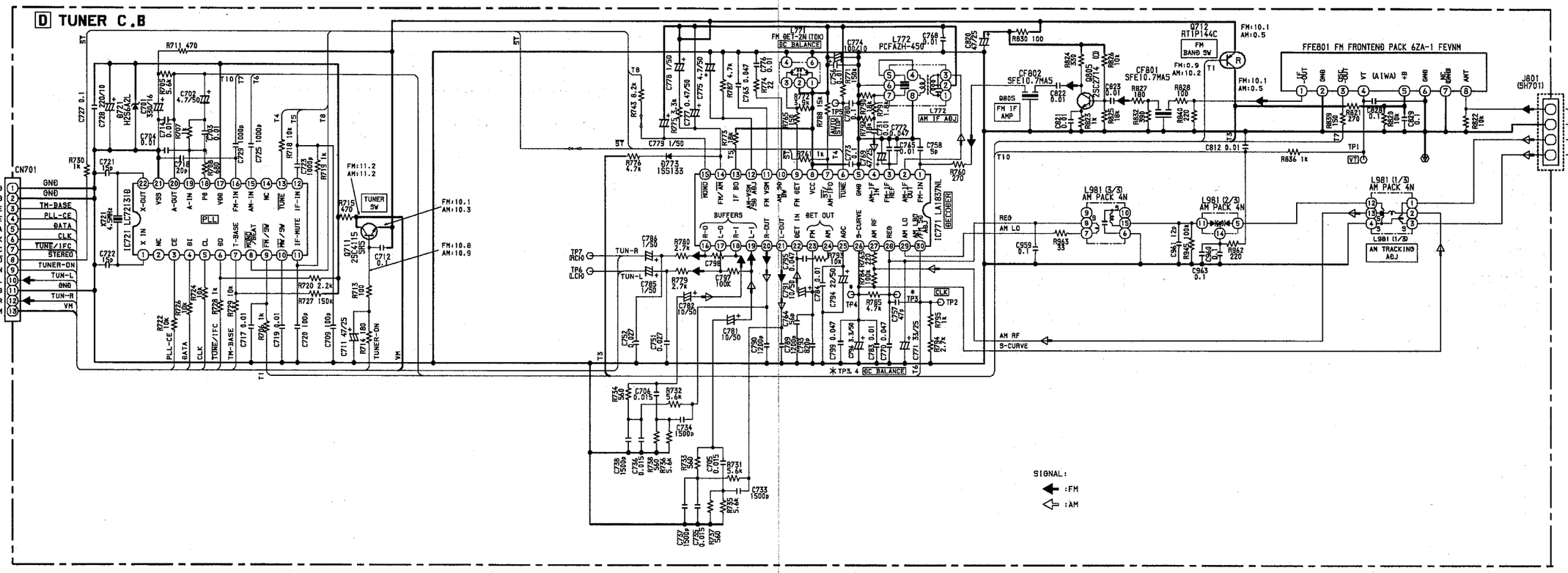

WIRING – 8 (TUNER : V)

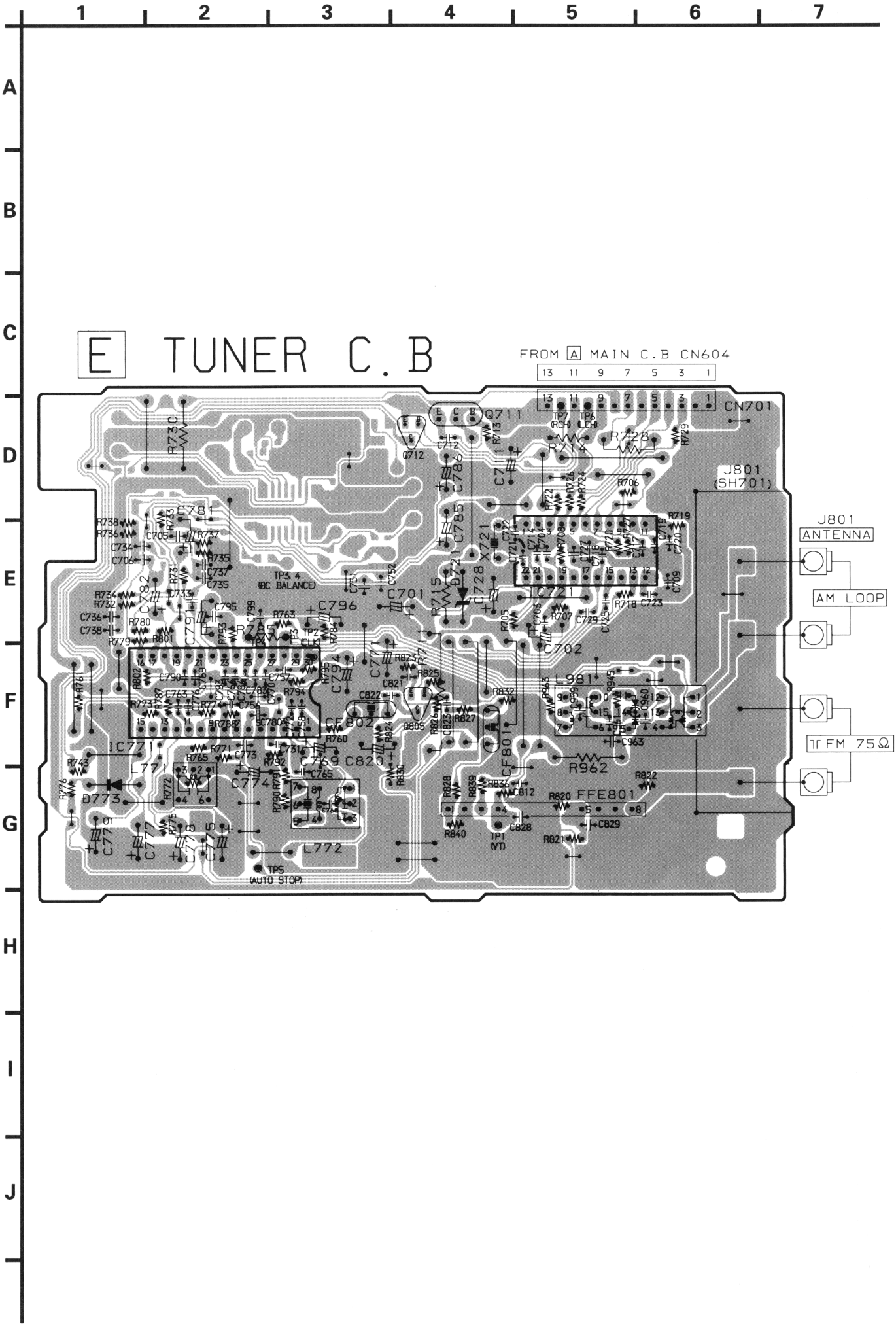

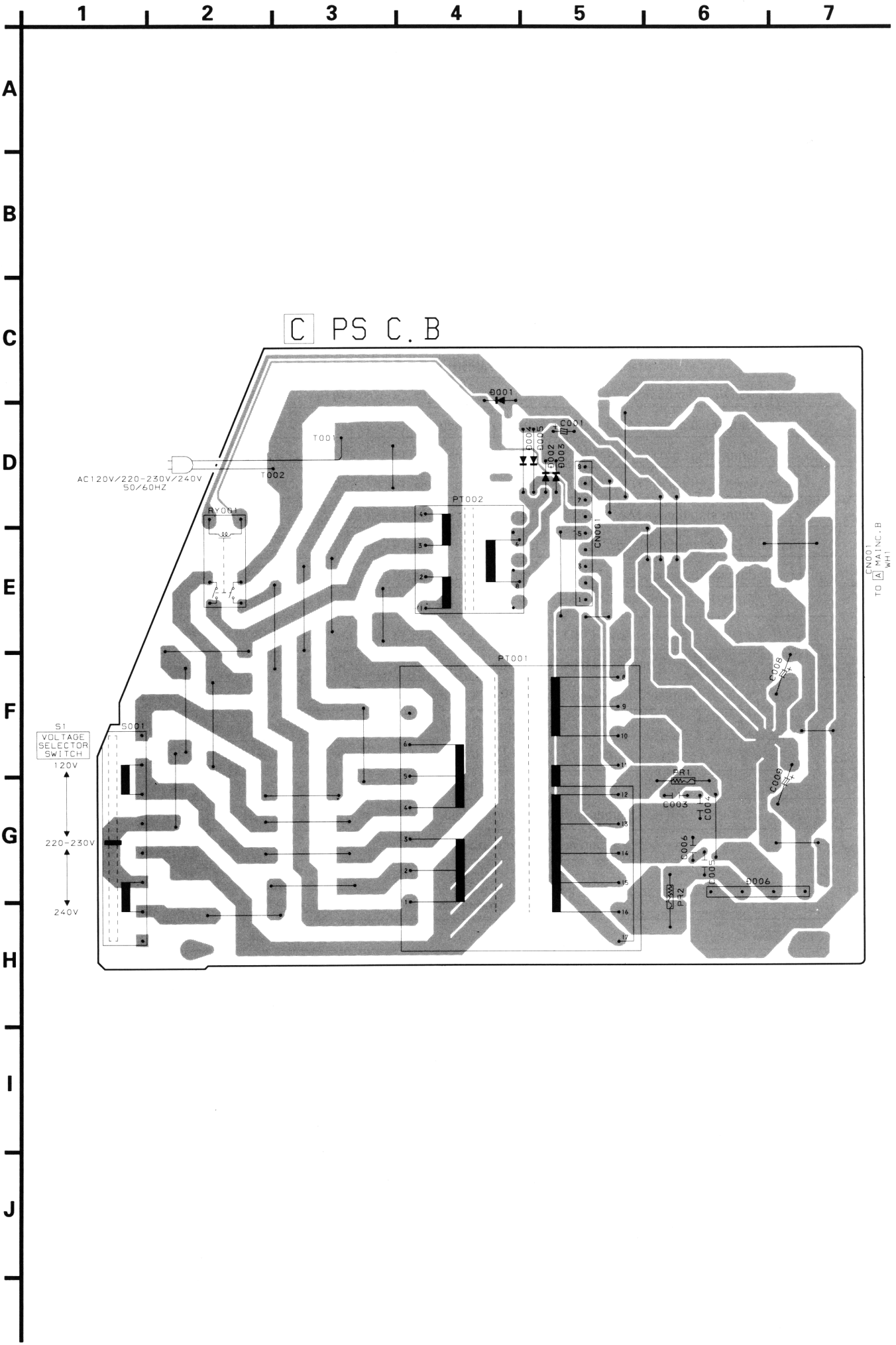
1
2
3
4
5
6
7
A
B
C
D
E
F
G
H
I
J
C PS C.B
D001
C001
T001
T002
AC120V/220-230V/240V
50/60HZ
RY001
PT002
CN001
PT001
S1
VOLTAGE
SELECTOR
SWITCH
120V
220-230V
240V
S001
C008
C009
FR1
C003
C004
C006
C005
D006
PT2
CN001
TO A MAIN C.B
WH1

SCHEMATIC DIAGRAM – 9 (PS : HR)

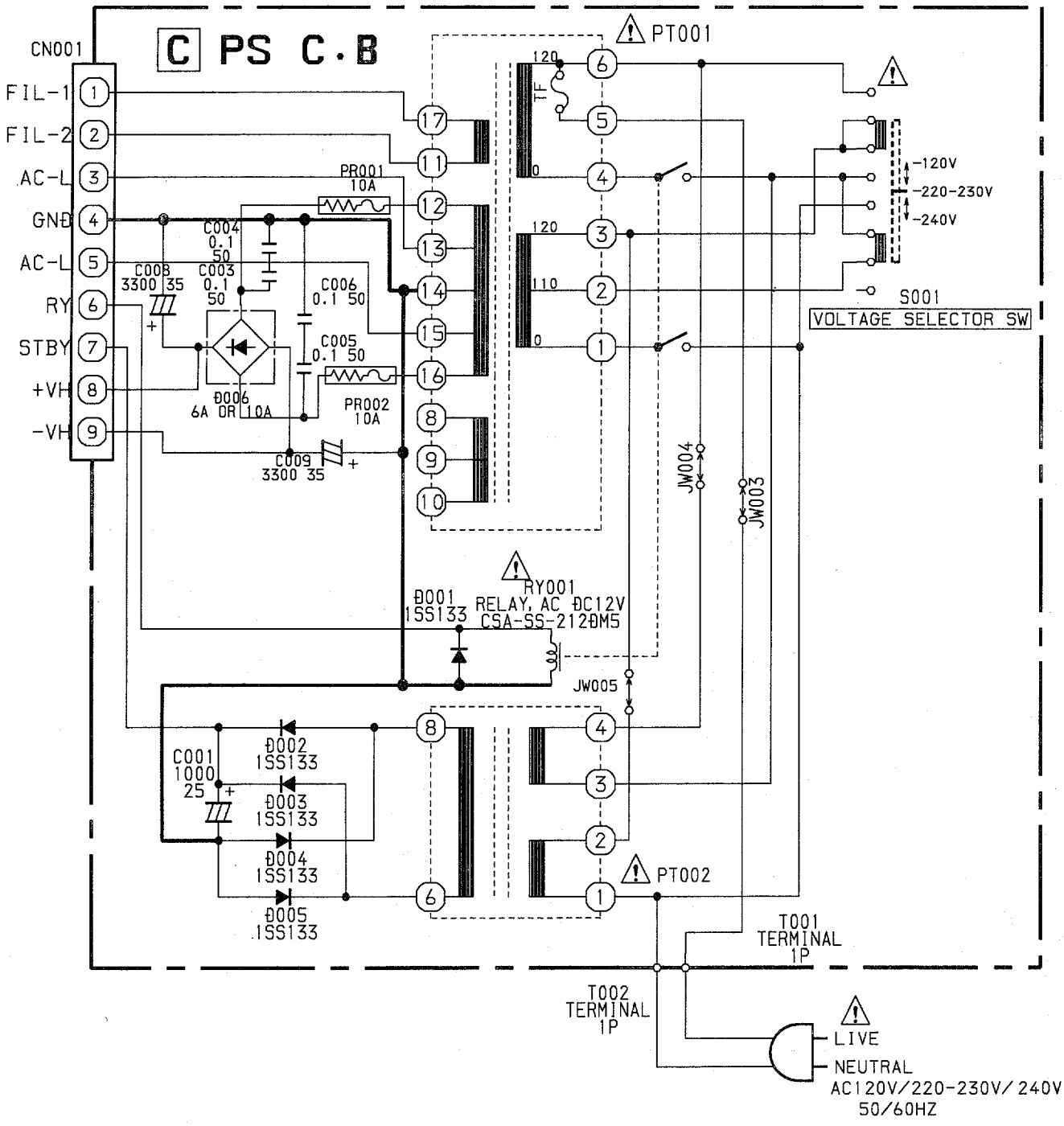

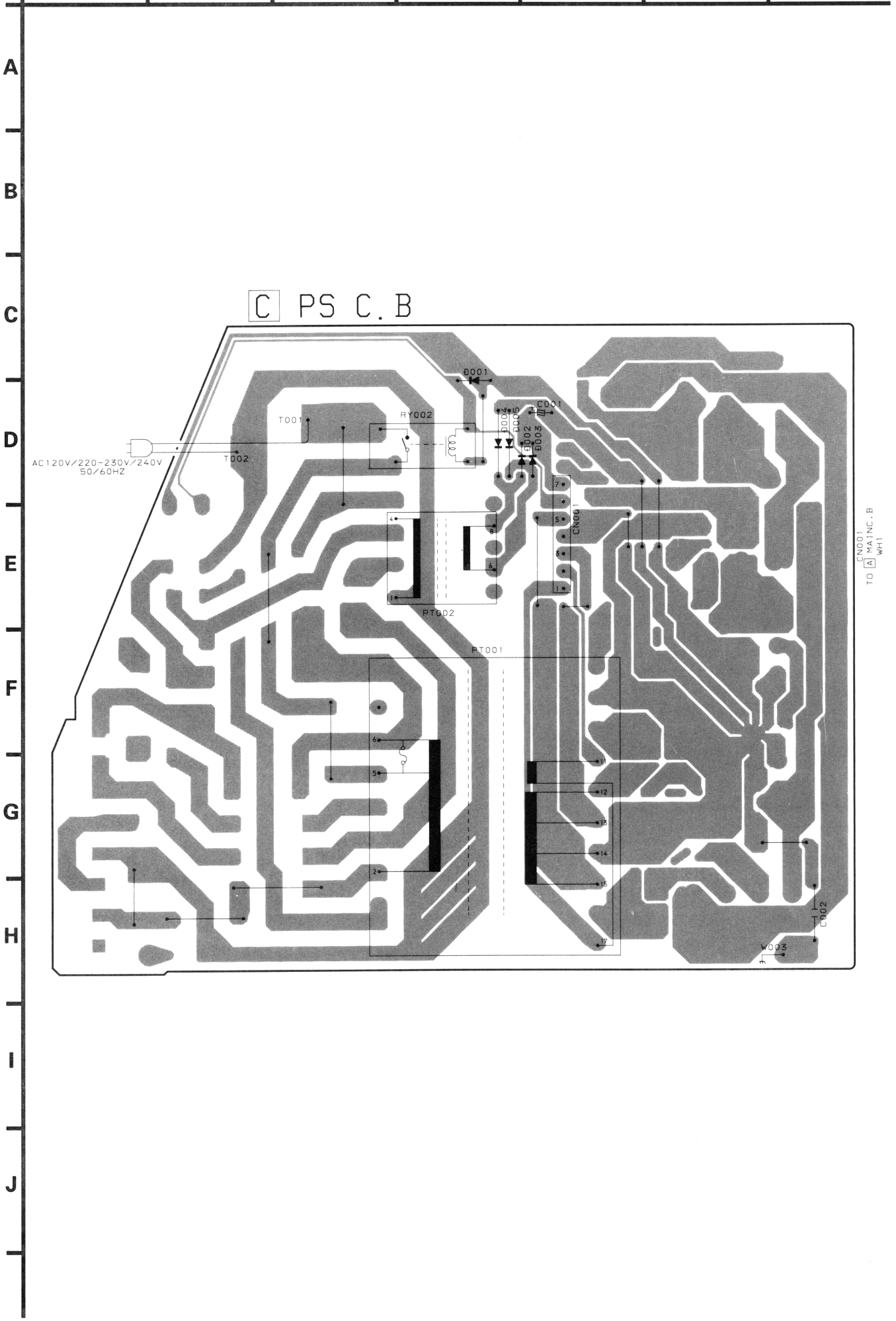
1
2
3
4
5
6
7
A
B
C
D
E
F
G
H
I
J
C PS C.B
AC120V/220-230V/240V
50/60HZ
T002
T001
RY002
D001
D004
D005
D002
D003
C001
CN001
PT002
PT001
C002
W003
CN001
TO A MAINC.B
WH1

SCHEMATIC DIAGRAM – 10 (PS : EZ)

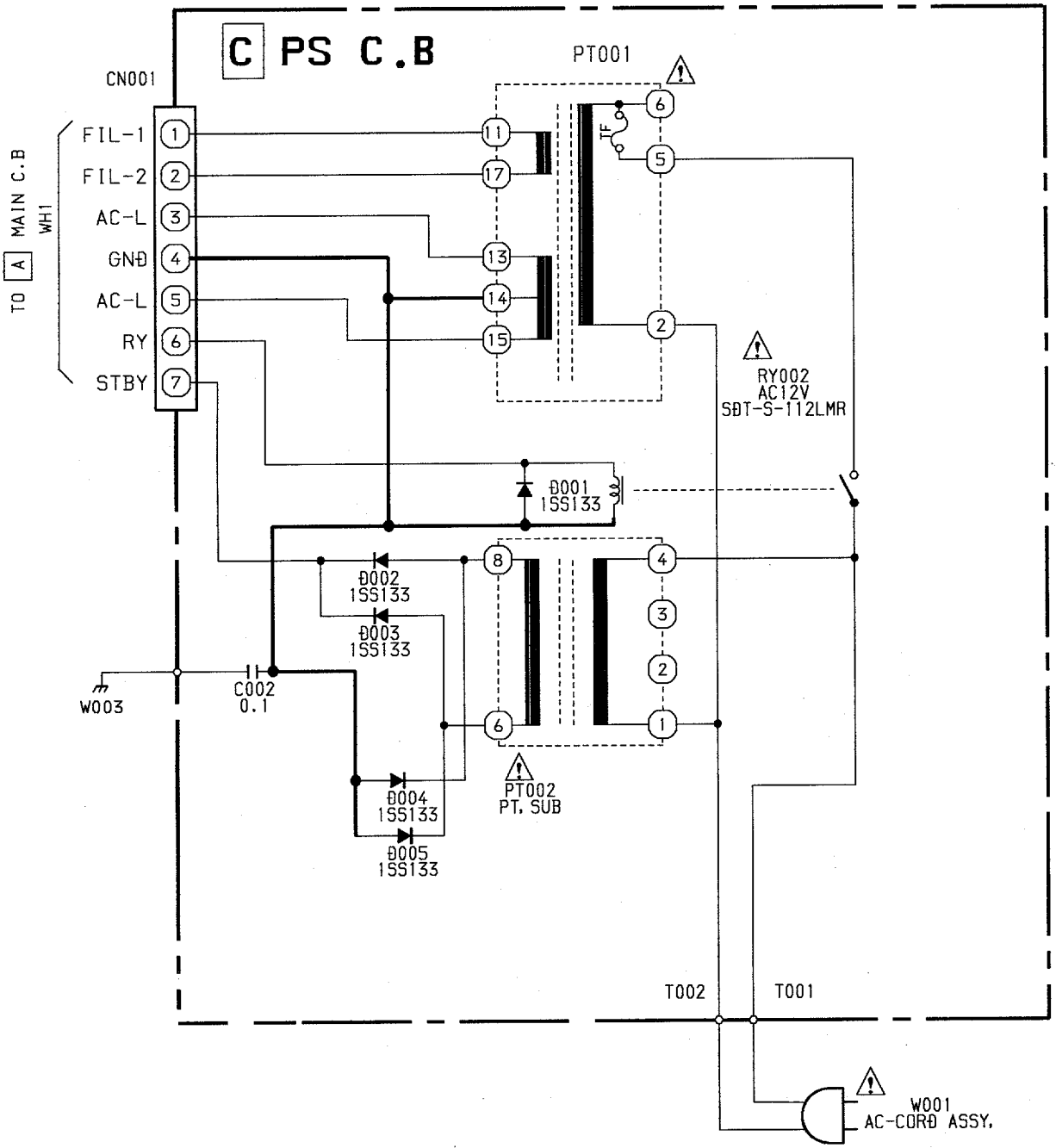

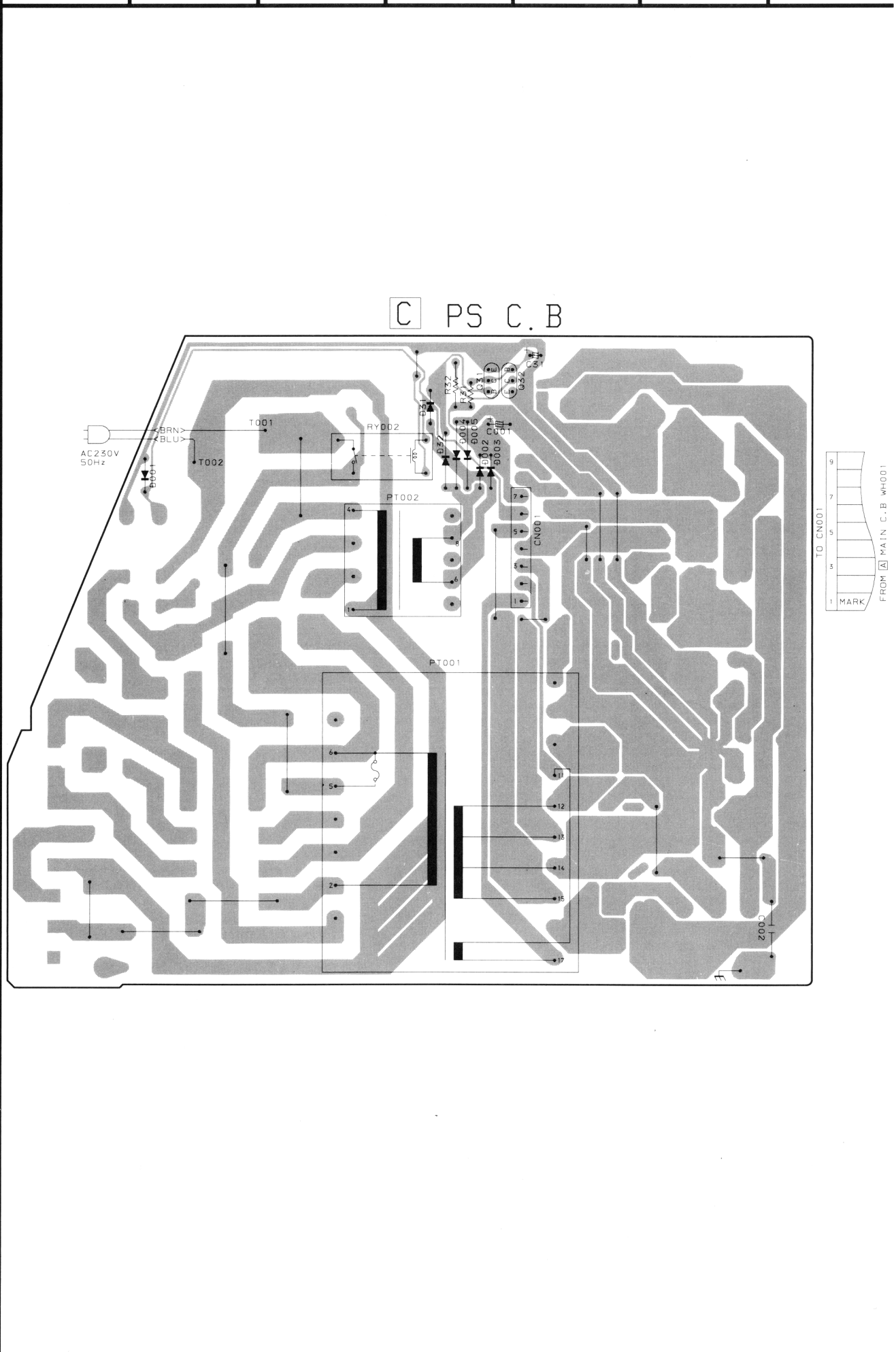
1
2
3
4
5
6
7
A
B
C
D
E
F
G
H
I
J
C PS C.B
AC230V
50Hz
BRN
BLU
T001
T002
RY002
PT002
PT001
CN001
TO CN001
FROM A MAIN C.B WH001
MARK
C002

SCHEMATIC DIAGRAM – 11 (PS : K, V)

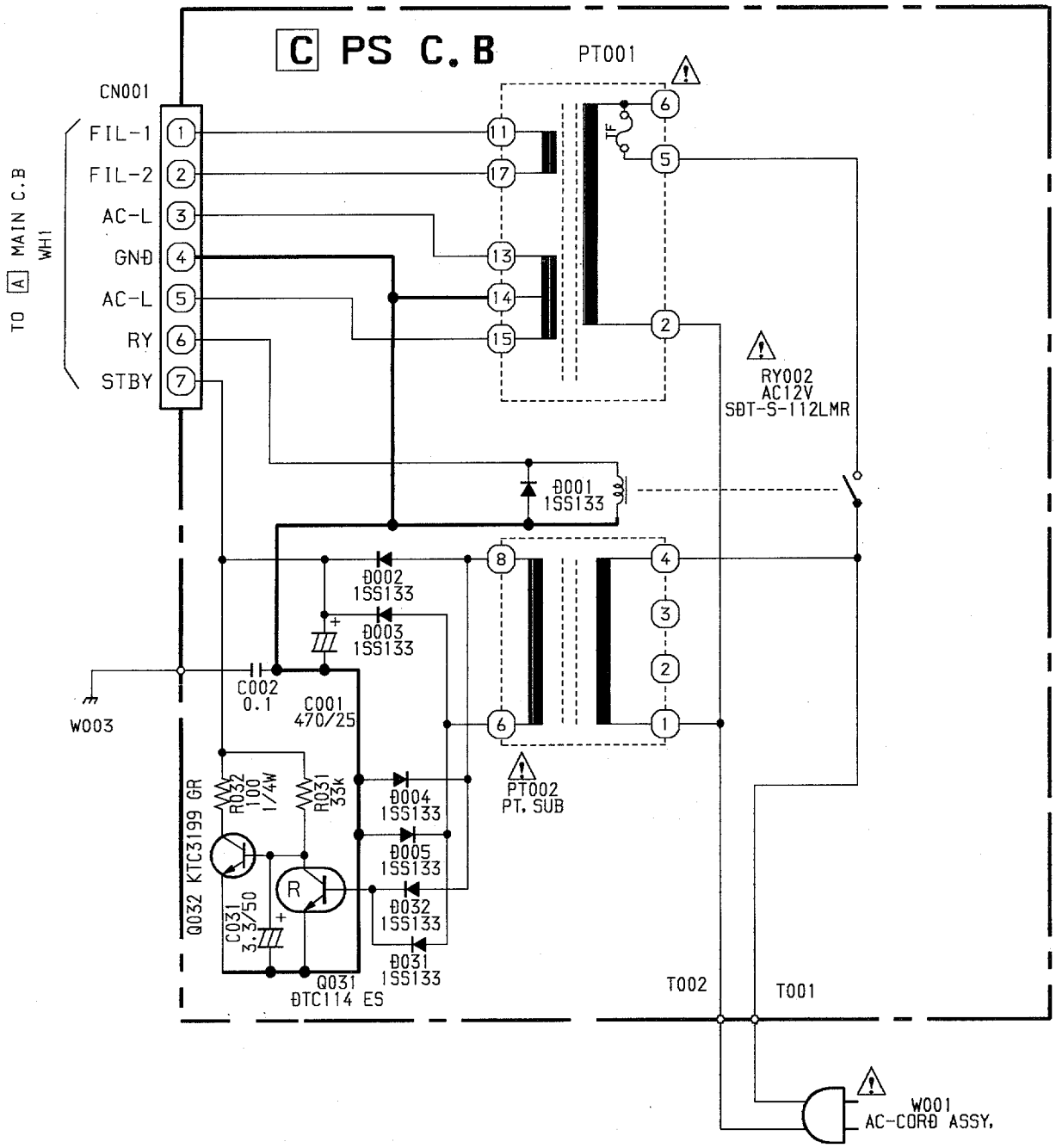

IC BLOCK DIAGRAM

IC, BA7762AFS

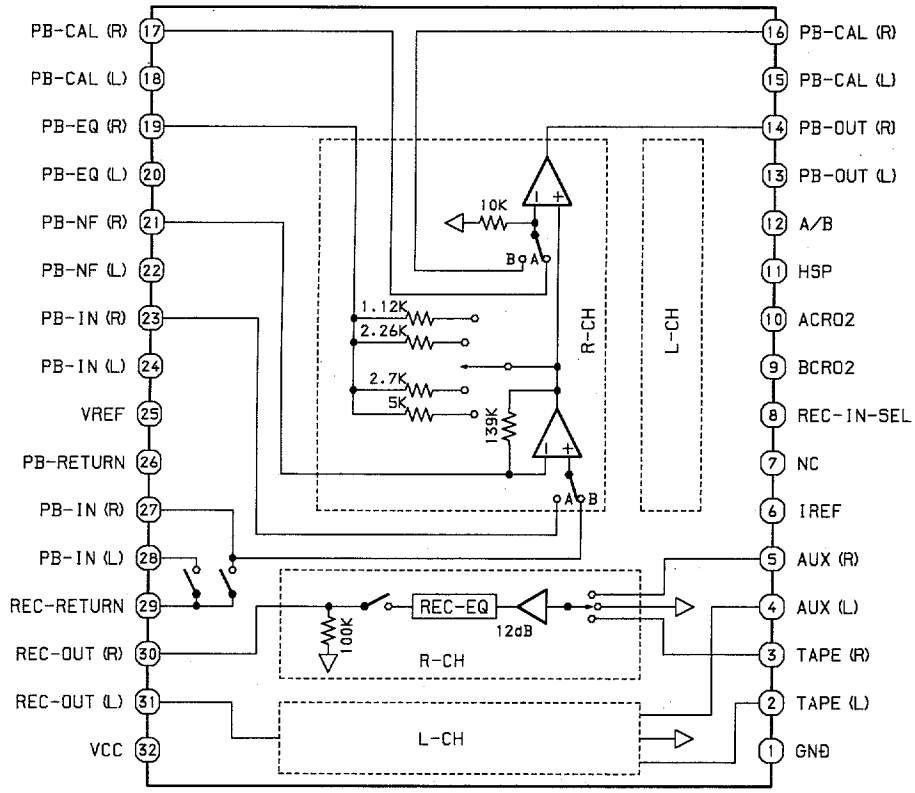

IC, M62445AFP

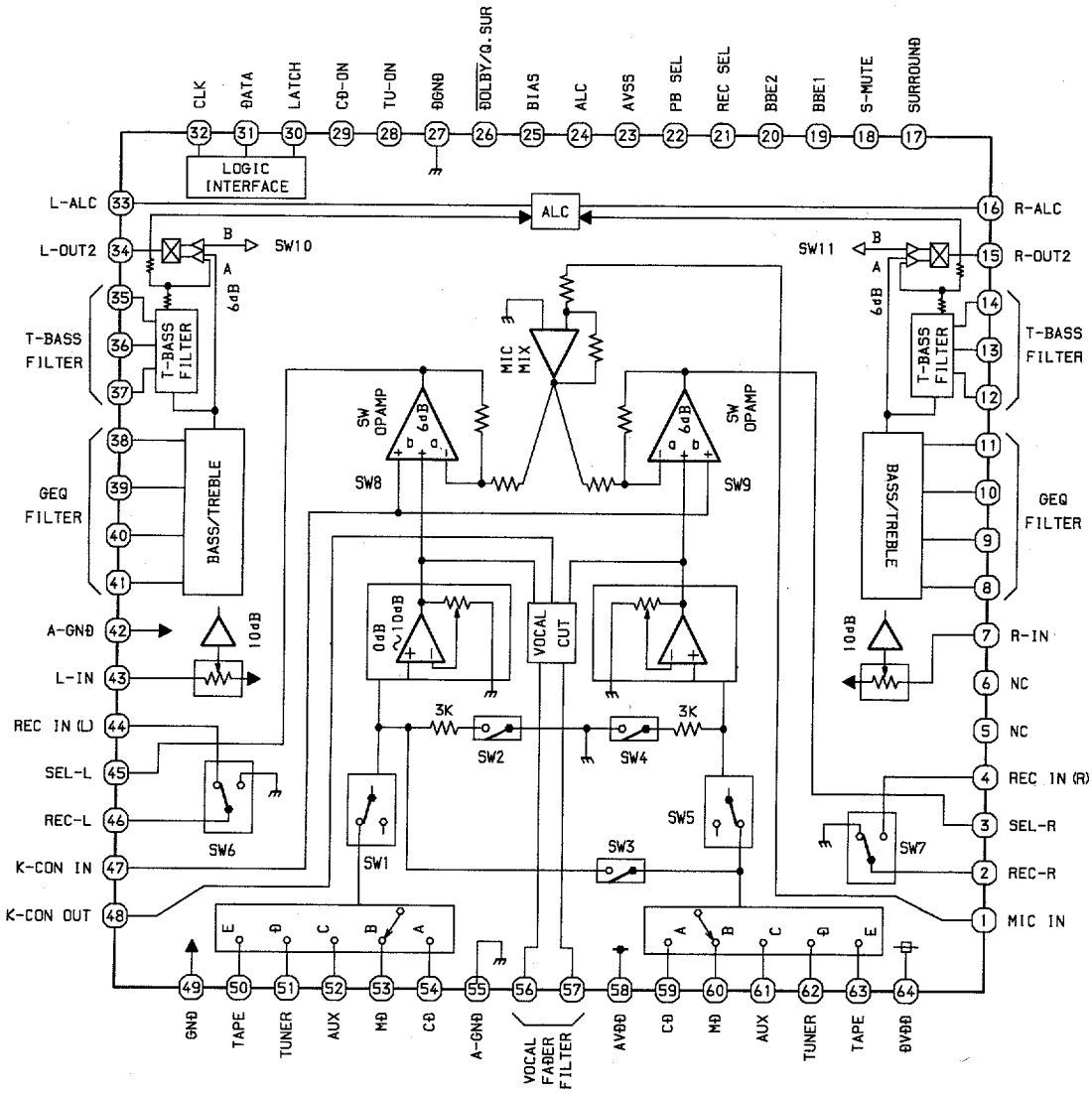

IC, BU2099FV

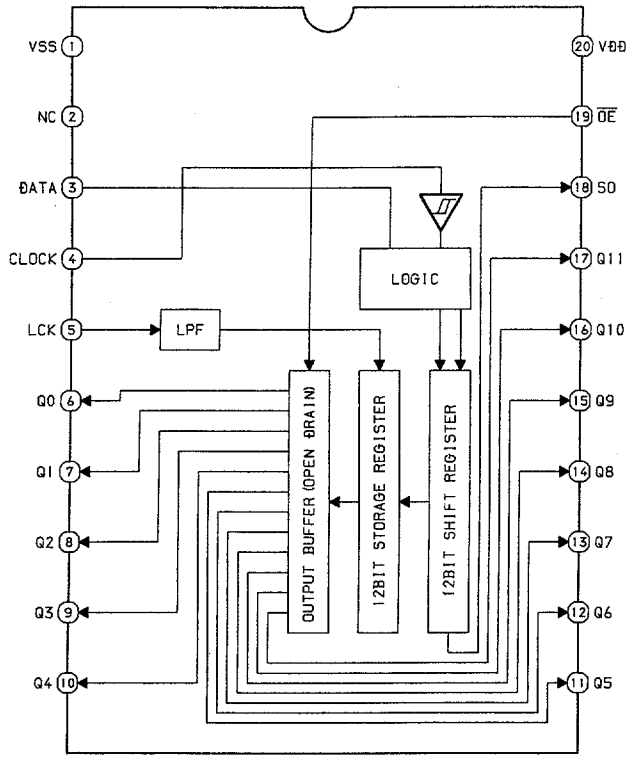

IC, BA3835F

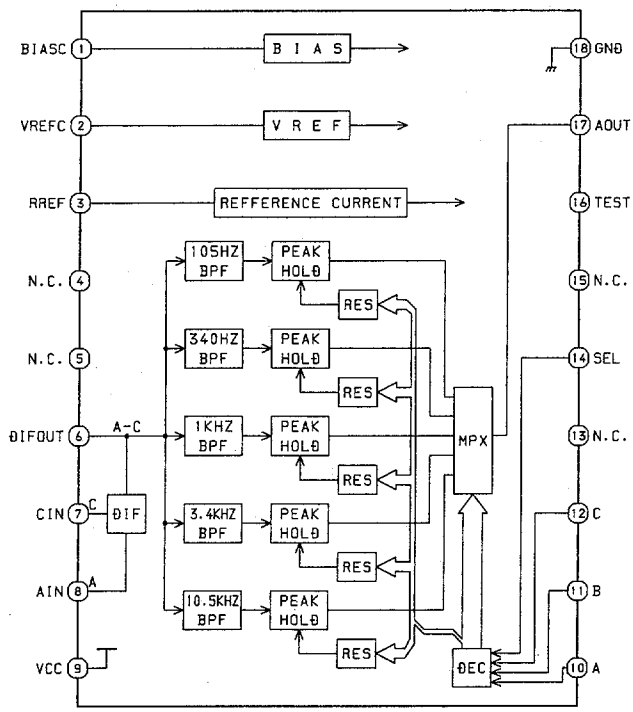

IC, LA1837NL

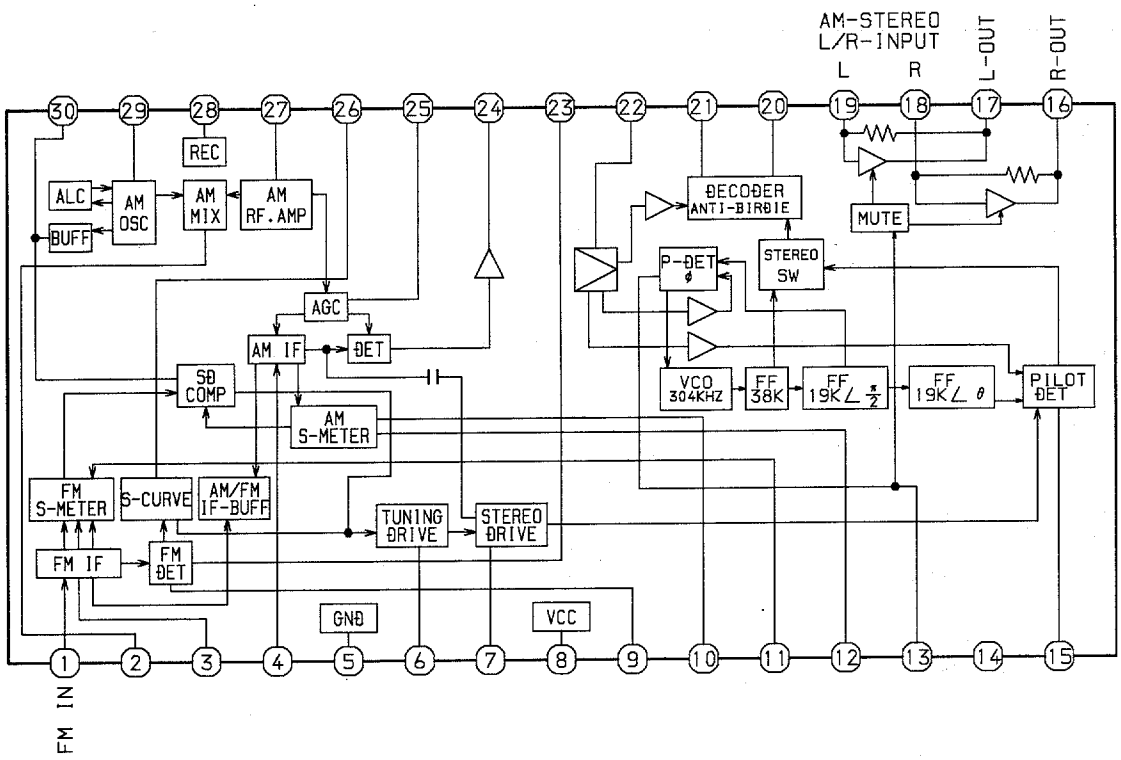

IC, LC72131D

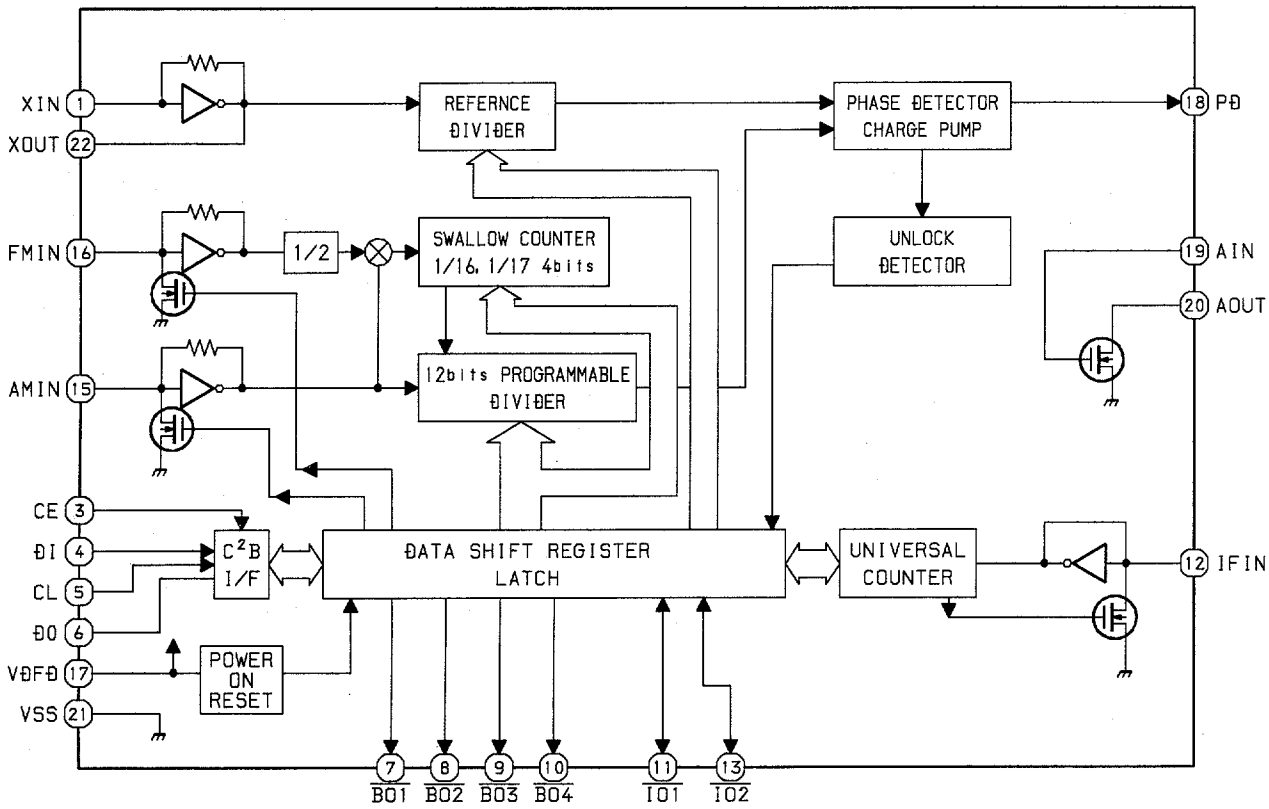

IC, BU1920FS

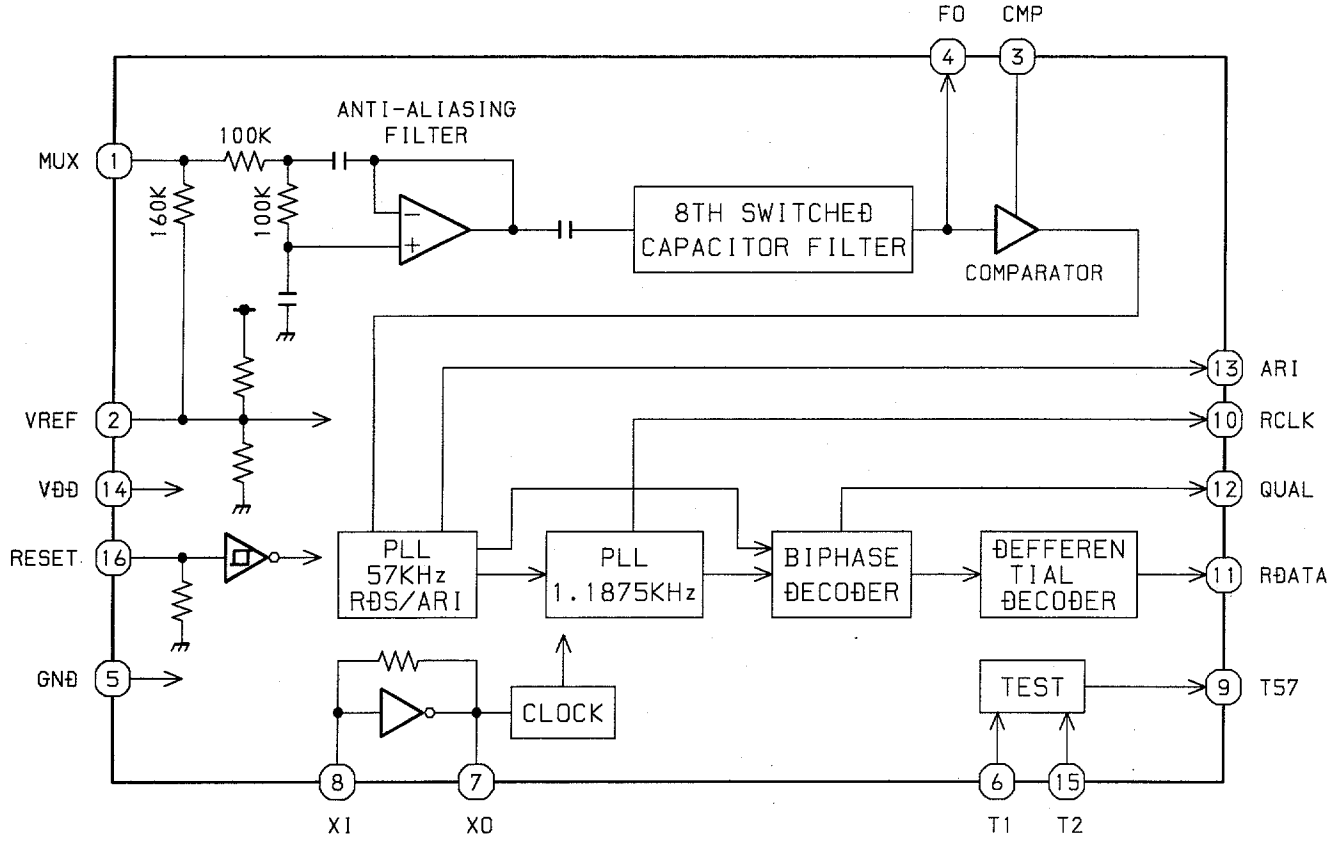

IC DESCRIPTION

IC, uPD780228GF-037-3BA

Pin No.	Pin Name	I/O	Description
1	O-K-SCAN	O	Key scan output.
2	I-JOG-A	I	Dial jog rotary encoder input A.
3	I-JOG-B	I	Dial jog rotary encoder input B.
4	TAPE	O	" TAPE " LED ON/OFF output.
5	TUNER	O	" TUNER " LED ON/OFF output.
6	AUX	O	" AUX " LED ON/OFF output.
7	CD	O	" CD " LED ON/OFF output.
8	O-MOTOR	O	DECK MOTOR ON/OFF output.
9	O-SOL2	O	DECK2 solenoid output.
10	O-SOL1	O	DECK1 solenoid output.
11	O-MUTE	O	System mute ON/OFF output.
12	O-CD.OPEN	O	CD tray open data output.
13	O-CD.CLOSE	O	CD tray close data output.
14	O-STB (SHIFT)	O	Latch strobe output for FRONT shift register.
15	I-HP-MUTE	I	Headphone insert detection input.
16	I-TM-BASE	I	Base input for clock.
17	IC	–	Internal connection (connected to GND).
18	VSS	–	GND.
19	VDD	–	Power supply.
20	O-POWER	O	System power supply ON/OFF output.
21	O-STB (M)	O	Strobe output for MAIN.
22	O-CLOCK (M)	O	Clock output for MAIN.
23	O-DATA (M)	O	Data output for MAIN.
24	O-CD.DISH.F	O	CD turntable forward rotation output.
25	O-CD.DISH.R	O	CD turntable reverse rotation output.
26	I-WRQ/I-STEREO	I	CD WRQ input / Tuner stereo input.
27	I-DRF/I-IFCNT	I	CD DRF input / Tune IF count serial data input.
28	I-RDS-CLK	I	Tuner RDS clock input.
29	I-SUBQ/I-RDS DATA	I	CD SUBQ data input / RDS data input.
30	RESET	–	System reset.
31	O-DATA	O	CD data output.
32	O-CDCLK	O	CD clock output.
33	O-CD-CE	O	CD enable output.
34	I-RMC	I	System remote control input.
35	I-DISH.SENS	I	CD turntable photo sensor input.
36	O-CLK-SHIFT	O	Micon clock shift output.
37	VDD1	–	Power supply.
38	X2	–	4.19MHz oscillator circuit.
39	X1	I	4.19MHz oscillator circuit.
40	VSS1	–	GND.
41	AVDD	–	Power supply.
42	I-HOLD	I	Power failure detected input." H " to stop clock and main memory.
43	I-CD.SW	I	CD mecha switch input.
44	I-SPEANA	I	AD input for spectrum analyser.

Pin No.	Pin Name	I/O	Description
45	I-RE.VOL	I	Volume jog AD input.
46	I-RDS-SIG	I	RDS tuner signal input.
47	I-KEY3	I	Key3 input.
48	I-KEY2	I	Key2 input.
49	I-KEY1	I	Key1 input.
50	AVSS	–	GND.
51	O-CDLED	O	CD flash window LED ON/OFF output.
52	O-PLL-CE	O	Chip enable output for tuner PLL.
53 ~ 58	P1 ~ P6	O	FL segment P1 ~ P6 output.
59	P7/REV2	I/O	FL segment P7 output / REV2 data input.
60	P8/REV1	I/O	FL segment P8 output / REV1 data input.
61	P9/AM10K	I/O	FL segment P9 output / AM10K data input.
62	P10/AMST.WIDE	I/O	FL segment P10 output / AMST WIDE data input.
63	P11/LW	I/O	FL segment P11 output / LW mode data input.
64	P12/SW	I/O	FL segment P12 output / SW mode data input.
65	P13/FM1	I/O	FL segment P13 output / FM1 mode data input.
66	P14/RDS	I/O	FL segment P14 output / RDS data input.
67	P15/CST2	I/O	FL segment P15 output / DECK2 cassette detect switch data input.
68	P16/REB	I/O	FL segment P16 output / DECK2 side B record OK switch data input.
69	P17/CAM2	I/O	FL segment P17 output / DECK2 CAM switch data input.
70	P18/AUTO1	I/O	FL segment P18 output / DECK1 AUTO STOP switch data input.
71	P19/AUTO2	I/O	FL segment P19 output / DECK2 AUTO STOP switch data input.
72	P20/CAM1	I/O	FL segment P20 output / DECK1 CAM STOP switch data input.
73	P21/CST1	I/O	FL segment P21 output / DECK1 cassette detect switch data input.
74	P22/REA	I/O	FL segment P22 output / DECK2 side A record OK switch data input.
75	P23/KARAOKE	I/O	FL segment P23 output / KARAOKE data input.
76	P24/PROLOGIC	I/O	FL segment P24 output / PROLOGIC data input.
77	P25/NO DEMO	I/O	FL segment P25 output / NO DEMO data input.
78	P26	I/O	FL segment P26 output
79	VDD2	–	Power supply.
80	-VFL	–	Power supply for FL display.
81	SPEANA-A/P27	O	Spectrum analyser band switching data output / FL segment P27 output.
82	SPEANA-B/P28	O	Spectrum analyser band switching data output / FL segment P28 output.
83	SPEANA-C/P29	O	Spectrum analyser band switching data output / FL segment P29 output.
84 ~ 89	P30 ~ P35	O	FL segment P30 ~ P35 output.
90 ~100	G11 ~ G1	O	FL grid G10 ~ G1 output.

ADJUSTMENT – 1 <TUNER : HR>

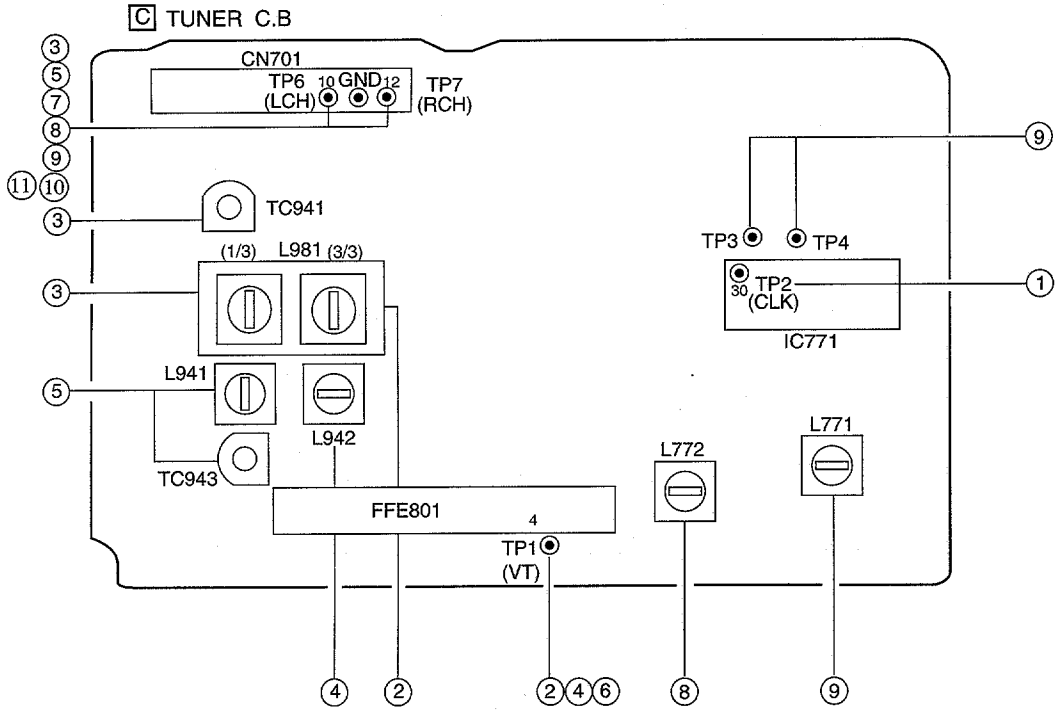

< TUNER SECTION >

1. Clock Frequency Check
   Settings : • Test point : TP2 (CLK)
   Method : Set to MW1602kHz and check that the test point is 2052kHz ± 45Hz.

2. MW VT Adjustment
   Settings : • Test point : TP1(VT)
   • Adjustment location : L981(3/3)
   Method : Set to MW 1710kHz and adjust L981(3/3) so that the test point becomes 8.0V ± 0.05V. Then set to MW 530kHz and check that the test point is more than 0.3V.

3. MW Tracking Adjustment
   Settings : • Test point : TP6(Lch), TP7(Rch)
   • Adjustment location :
   L981(1/3) 603kHz
   TC941 ..... 1404kHz
   Method : Set up TC941 to center before adjustment. The level at 603kHz is adjust to max. by L981(1/3). Then the level at 1404kHz is adjust to max. by TC941.

4. SW VT Adjustment
   Settings : • Test point : TP1(VT)
   • Adjustment location : L942
   Method : Set to SW 17.9MHz and adjust L942 so that the test point becomes 7.0V ± 0.05V. Then set to SW 5.9MHz and check that the test point is more than 0.3V.

5. SW Tracking Adjustment
   Settings : • Test point : TP6(Lch), TP7(Rch)
   • Adjustment location :
   L941 ..... 5.9MHz
   TC943 ..... 17.9MHz
   Method : Set up TC943 to center before adjustment. The level at 5.9MHz is adjust to max. byL941. Then the level at 17.9MHz is adjust to max. by TC943.

6. FM VT Check
   Settings : • Test point : TP1 (VT)
   Method : Set to FM 108.0MHz and check that the test point is less than 8.0V.
   Set to FM 87.5MHz and check that the test point is more than 0.5V.

7. FM Tracking Check
   Settings : • Test point : TP6(Lch), TP7(Rch)
   Method : Set to FM 98.0MHz and check that the test point is less than 9.0dBμV.

8. AM IF Adjustment
   Settings : • Test point : TP6(Lch), TP7(Rch)
   • Adjustment location :
   L772 ..... 450kHz
   Method : Adjust L772 so that the output becomes max.

9. DC Balance / Mono Distortion Adjustment
   Settings : • Test point : TP3, TP4 (DC Balance)
   TP6(Lch), TP7(Rch) (Distortion)
   • Adjustment location : L771
   • Input level : 60dBμV
   Method : Set to FM 98.0MHz and adjust L771 so that the voltage between TP3 and TP4 becomes 0V ± 0.04V. Next, check that the distortion is less than 1.3%.

10. Output Level Check
    <MW>
    Settings : • Test point : TP8 (Lch), TP9 (Rch)
    • Input level : 74dBμV
    Method : Set to MW 999kHz and check that the test point is 130mV ± 3dB.

    <FM>
    Settings : • Test point : TP8 (Lch), TP9 (Rch)
    • Input level : 60dBμV
    Method : Set to FM 98.0MHz and check that the test point is 520mV ± 3dB.

11. FM Separation Check
    Settings : • Test point : TP8 (Lch), TP9 (Rch)
    • Input level : 60dBμV
    Method : Set to FM 98.0MHz and check that the test point is more than 25dB.

ADJUSTMENT – 2 <TUNER : EZ, K>

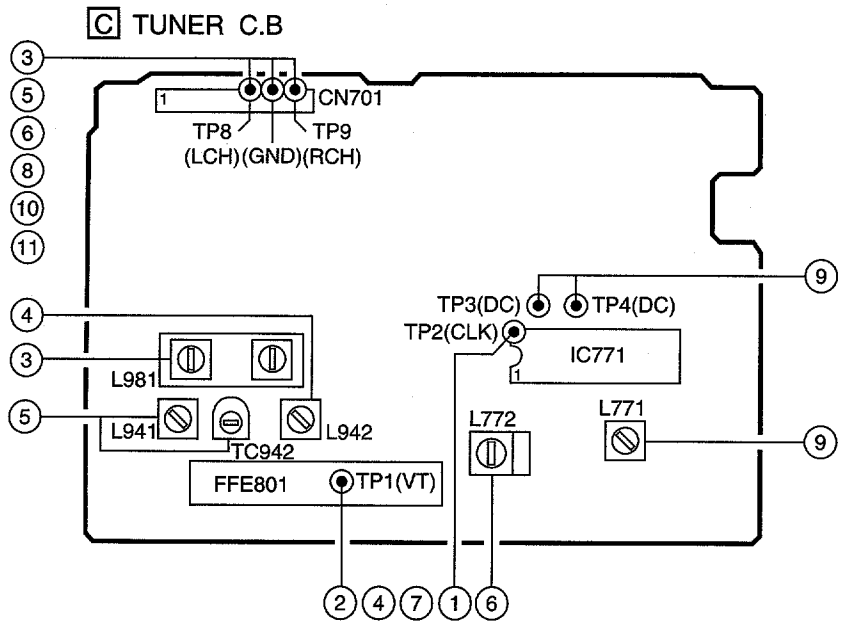

< TUNER SECTION >

1. Clock Frequency Check
   Settings : • Test point : TP2 (CLK)
   Method : Set to MW 1602kHz and check that the test point is 2052kHz ± 45Hz.

2. MW VT Check
   Settings : • Test point : TP1 (VT)
   Method : Set to MW 1602kHz and check that the test point is less than 8.0V. Then set to MW 531kHz and check that the test point is more than 0.6V.

3. MW Tracking Adjustment
   Settings : • Test point : TP8 (Lch), TP9 (Rch)
   • Adjustment location : L981 (1/3)
   Method : Set to MW 999kHz and adjust L981 (1/3) so that the test point becomes maximum.

4. LW VT Adjustment
   Settings : • Test point : TP1 (VT)
   • Adjustment location : L942
   Method : Set to LW 144kHz and adjust L942 so that the test point becomes 1.3V ± 0.05V.
   Then set to LW 290kHz and check that the test point is less than 8.0V.

5. LW Tracking Adjustment
   Settings : • Test point : TP8 (Lch), TP9 (Rch)
   • Adjustment location :
   L941 ..... 144kHz
   TC942 ..... 290kHz
   Method : Set up TC942 to center before adjustment. The level at 144kHz is adjusted to MAX by L941. Then the level at 290kHz is adjusted to MAX by TC942.

6. AM IF Adjustment
   Settings : • Test point : TP8 (Lch), TP9 (Rch)
   • Adjustment location :
   L772 ..... 450kHz

7. FM VT Check
   Settings : • Test point : TP1 (VT)
   Method : Set to FM 108.0MHz and check that the test point is less than 8.0V. Then set to FM 87.5MHz and check that the test point is more than 0.5V.

8. FM Tracking Check
   Settings : • Test point : TP8 (Lch), TP9 (Rch)
   Method : Set to FM 98.0MHz and check that the test point is less than 13dBμV.

9. DC Balance / Mono Distortion Adjustment
   Settings : • Test point : TP3,TP4 (DC balance)
   • Adjustment location : L771
   • Input level : 60dBμV
   Method : Set to FM 98.0MHz and adjust L771 so that the voltage between TP3 and TP4 becomes 0V ± 0.04V.
   Next, check that the distortion is less than 1.3%.

10. Output Level Check
    <MW>
    Settings : • Test point : TP8 (Lch), TP9 (Rch)
    • Input level : 74dBμV
    Method : Set to MW 999kHz and check that the test point is 130mV ± 3dB.

    <FM>
    Settings : • Test point : TP8 (Lch), TP9 (Rch)
    • Input level : 60dBμV
    Method : Set to FM 98.0MHz and check that the test point is 520mV ± 3dB.

11. FM Separation Check
    Settings : • Test point : TP8 (Lch), TP9 (Rch)
    • Input level : 60dBμV
    Method : Set to FM 98.0MHz and check that the test point is more than 25dB.

ADJUSTMENT – 3 <TUNER : V>

[D] TUNER C.B

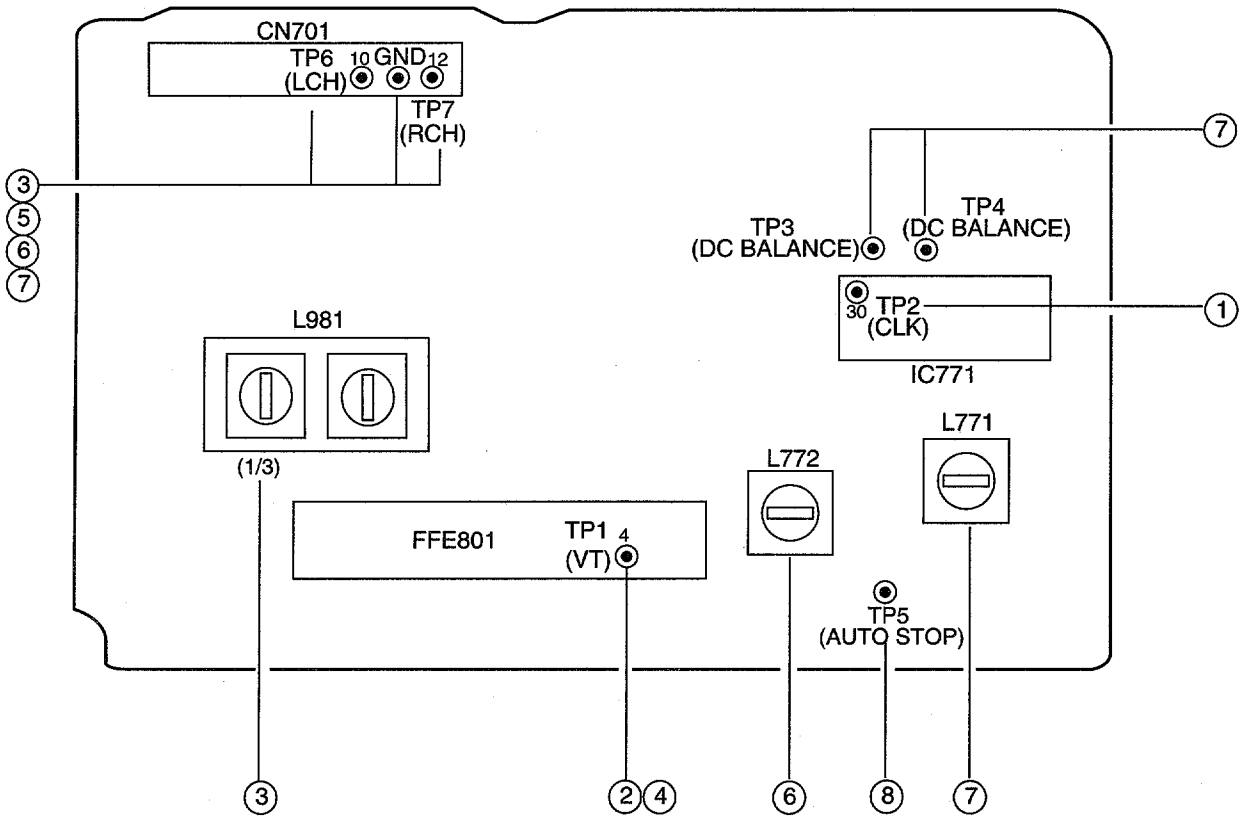

< TUNER SECTION >

1. Clock Frequency Check
   Settings : • Test point : TP2
   Method : Set to AM 1710kHz and check that the test point is 2160kHz ± 45Hz.

2. AM VT Check
   Settings : • Test point : TP1
   Method : Set to AM 1710kHz and AM 530kHz and check that the test point is less than 8.5V(1710kHz) and more than 0.6V(530kHz).

3. AM Tracking Adjustment
   Settings : • Test point : TP6(Lch), TP7(Rch)
   • Adjustment location :
   L981(1/3) 1000kHz
   Method : Set to AM 1000kHz and adjust L981(1/3) so that the test point becomes max.

4. FM VT Check
   Settings : • Test point : TP1
   Method : Set to FM 108.0MHz and check that the test point is less than 8.0V.
   Set to FM 87.5MHz and check that the test point is more than 0.5V.

5. FM Tracking Check
   Settings : • Test point : TP6(Lch), TP7(Rch)
   Method : • Set to FM 98.0MHz and check that the test point is less than 9.0dBμV.

6. AM IF Adjustment
   Settings : • Test point : TP6(Lch), TP7(Rch)
   • Adjustment location :
   L772 .....450kHz
   Method : • Adjust L772 so that the output becomes max

7. DC Balance / Mono Distortion Adjustment
   Settings : • Test point : TP3, TP4 (DC Balance)
   TP6(Lch), TP7(Rch) (Distortion)
   • Adjustment location : L771
   • Input level : 60dBμV
   Method : Set to FM 98.0MHz and adjust L771 so that the voltage between TP3 and TP4 becomes 0V ± 0.04V. Next, check that the distortion is less than 1.3%

8. Auto Stop Level Check
   AM
   Settings : • Test point : TP5
   • Input level : 52dBμV
   Method : Set to AM 1000kHz and check that the auto stop is at 52dBμV +10/-15dB.

   FM
   Settings : • Test point : TP5
   • Input level : 25dBμV
   Method : Set to FM 98.0MHz and check that the auto stop is at 25dBμV ± 10dB.

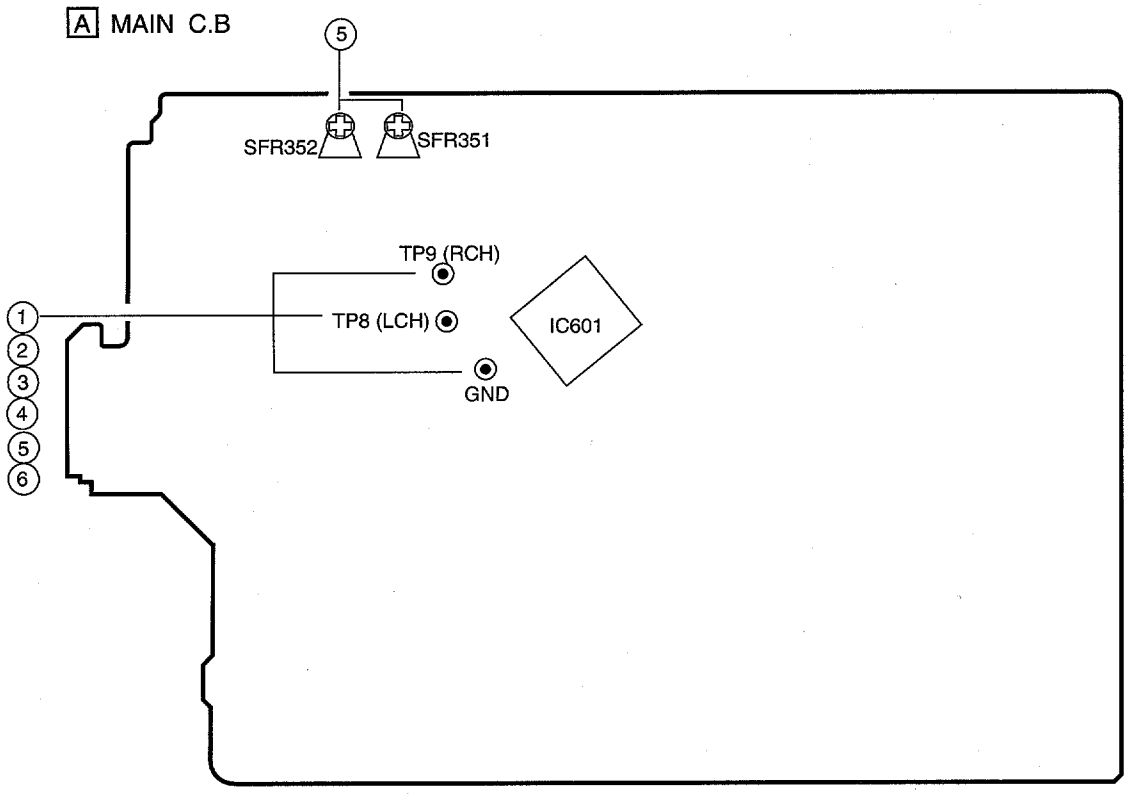

DECK-2 R/P/E HEAD (EXCEPT HR)

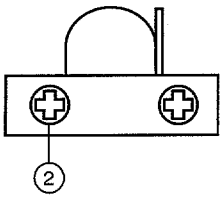

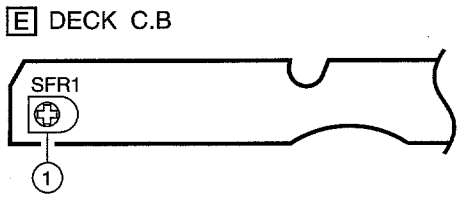

DECK–1 P HEAD
DECK-2 R/P/E HEAD (HR ONLY)

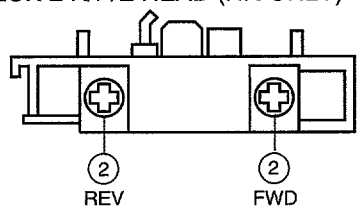

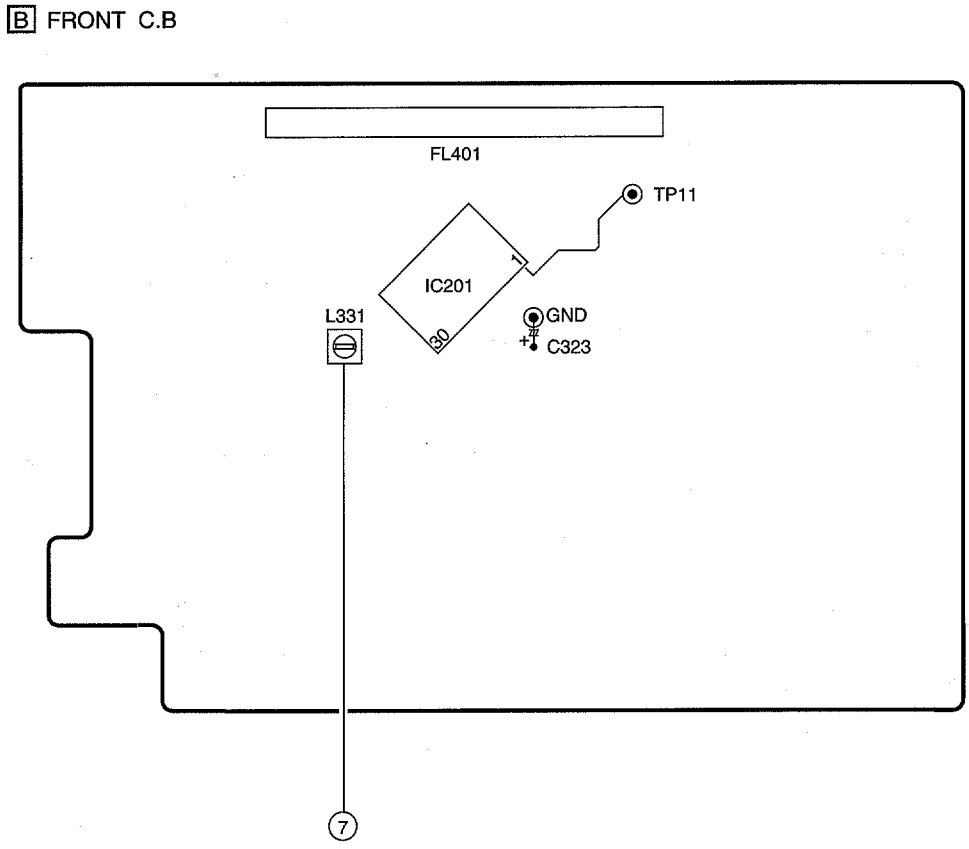

ADJUSTMENT <DECK>

< DECK SECTION >

1. Tape Speed Adjustment (DECK 1, DECK 2)
   Settings : • Test tape : TTA–100
   • Test point : TP8(Lch), TP9(Rch)
   • Adjustment location : SFR1
   Method : Play back the test tape and adjust SFR101 so that the frequency counter reads 3000Hz ± 5Hz and ±45Hz (REV) with respect to forward speed.

2. Head Azimuth Adjustment (DECK 1, DECK 2)
   Settings : • Test tape : TTA–330
   • Test point : TP8(Lch), TP9(Rch)
   • Adjustment location : Head azimuth adjustment screw
   Method : Play back (FWD) the 8kHz signal of the test tape and adjust screw so that the output becomes maximum. Next, perform on REV PLAY mode.

3. PB Frequency Response Check (DECK 1, DECK 2)
   Settings : • Test tape : TTA–330
   • Test point :TP8(Lch), TP9(Rch)
   Method : Play back the 315Hz and 8kHz signals of the test tape and check that the output ratio of the 8kHz signal with respect to that of the 315Hz signal is within 5dB.

4. PB Sensitivity Check (DECK 1, DECK 2)
   Settings : • Test tape : TTA–200 (400Hz)
   • Test point : TP8(Lch), TP9(Rch)
   Method : Play back the test tape and check that the output level of the test point is 250mV ± 3dB.

5. REC/PB Frequency Response Adjustment (DECK 1)
   Settings : • Test tape : TTA–602
   • Test point : TP8(Lch), TP9(Rch)
   • Input signal : 1kHz / 10kHz (LINE IN)
   • Adjustment location : SFR351 (Lch)
   SFR352 (Rch)
   Method : Apply a 1kHz signal and REC mode. Then adjust OSC attenuator so that the output level at the TP8, TP9 becomes -20VU(-30.2dBV). Record and play back the 1kHz and 8kHz signals and adjust SFRs so that the output of the 8kHz signals becomes 0dB ± 0.5dB with respect to that of the 1kHz signal.

6. REC/PB Sensitivity Check (DECK 1)
   Settings : • Test tape : TTA–602
   • Test point : TP8(Lch), TP9(Rch)
   • Input signal : 1kHz (LINE IN)
   Method : Apply a 1kHz signal and REC mode. Then adjust OSC attenuator so that the output level at TP8, TP9 becomes 0VU (-10.2dBV). Record and play back the 1kHz signals and check that the output is 0dB ± 3.5dB.

7. μ-con OSC Adjustment
   Settings : • Test point : TP11,GND
   • Adjustment location : L331
   Method : Insert AC plug while pressing TUNER function key. Adjust L351 so that the frequency across the test point becomes 84.8 ± 0.08Hz.

PRACTICAL SERVICE FIGURE

<TUNER SECTION>

FM SECTION

IHF Sensitivity :	Less than 10dB (at 87.5MHz)<HR>
	Less than 9dB (at 98.0/108.0MHz)<HR>
	Less than 14dB (at 87.5MHz)<EZ,K>
	Less than 13dB (at 98.0/108.0MHz)<EZ,K>
	Less than 8dB (at 87.598.0/108.0MHz)<V>
	Less than 12dB (at 70.0MHz)<V>
Signal to noise ratio :	More than 68dB (at 98.0MHz)<MONO>
	More than 68dB (at 98.0MHz)<STEREO>
Distortion :	Less than 1.2%(at 98.0MHz) <MONO>
	Less than 2.0%(at 98.0 MHz) <STEREO>
Stereo separation :	More than 22dB (at 98.0MHz)<EXCEPT EZ,K>
	More than 12dB (at 98.0MHz)<EZ,K>
Intermediate frequency :	10.7MHz

MW SECTION

Sensitivity :	Less than 60 dB (at 603kHz)
	Less than 58 dB (at 999/1404kHz)
S/N :	More than 36 dB (at 999/1000kHz)
Distortion :	Less than 1.5% (at 999/1000kHz)

SW SECTION<HR>

Sensitivity :	Less than 51 dB (at 5.9MHz)
	Less than 45 dB (at 12.0MHz)
	Less than 44 dB (at 17.9MHz)

LW SECTION<EZ,K>

Sensitivity :	Less than 64 dB (at 144kHz)
	Less than 68 dB (at 198kHz)
	Less than 66 dB (at 290kHz)

<DECK SECTION>

Tape speed :	3000Hz ± 45Hz
Wow & flutter :	Less than 0.25% (W.R.M.S.)
Take-up torque :	30 ~ 55g-cm
F.F torque :	75 ~ 180g-c
REW torque :	75 ~ 130g-c
Back tension :	2 ~ 7g-cm (FWD,REV)
PB Output level :	2.8V ± 2dB (SP OUT 2V)
REC/PB Output level :	2.0V ± 1dB (SP OUT 2V)
Distortion (REC/PB) :	Less than 2.0%
Noise level (PB) :	Less than 1.0mV(FILTER DIN AUDIO)
Noise level (REC/PB) :	Less than 1.2mV(FILTER DIN AUDIO)
Erasing ratio :	More than 60dB (at 125Hz)
Test Tape :	TTA-602,TA-200

MECHANICAL EXPLODED VIEW 1 / 1

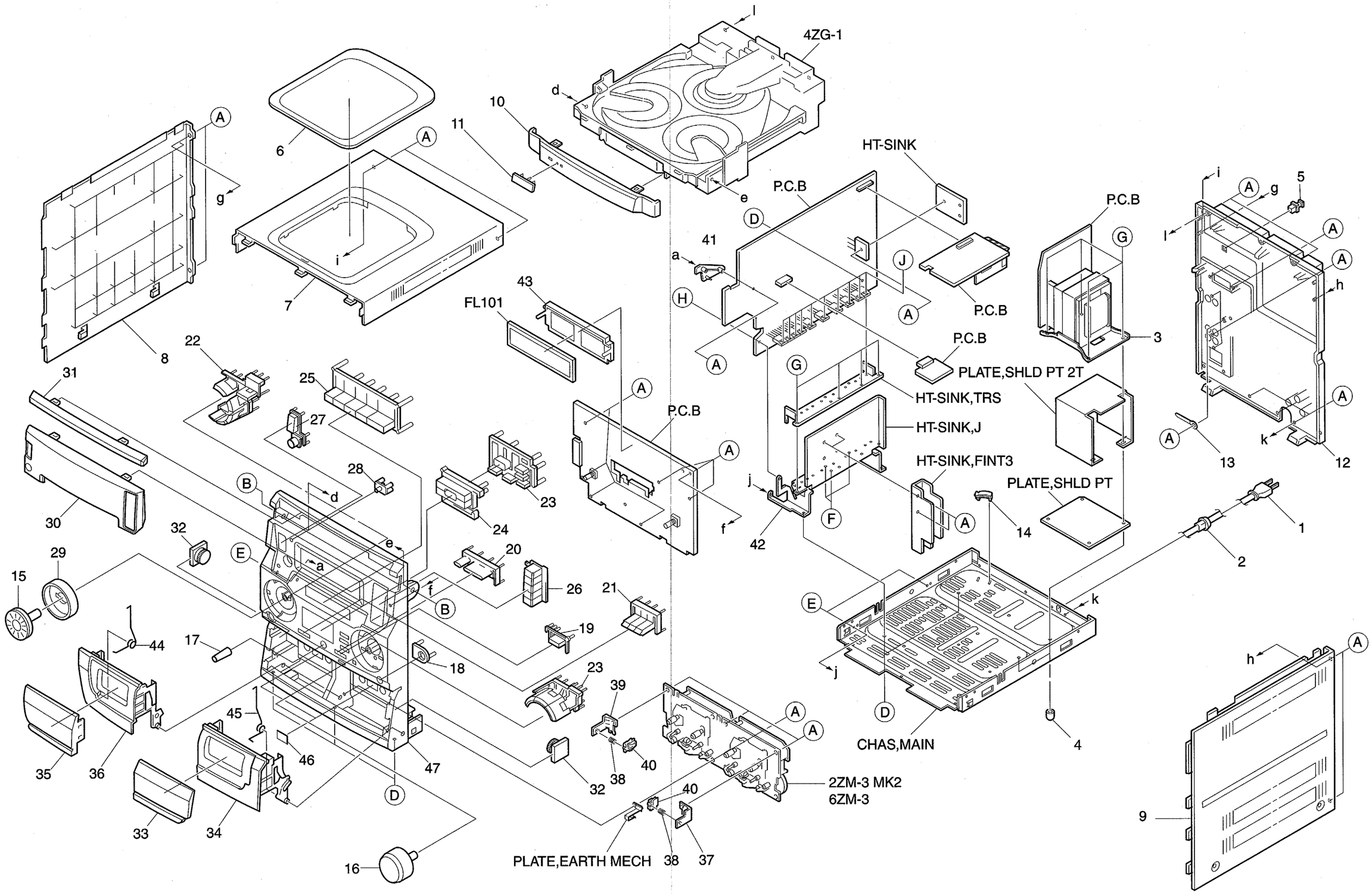

MECHANICAL PARTS LIST 1 / 1

If can't understand for Description please kindly refer to " REFERENCE NAME LIST ".

REF. NO	PART NO.	KANRI NO.	DESCRIPTION
⚠ 1	87-050-034-010		AC CORD ASSY,E<K>
⚠ 1	87-050-079-010		AC-CORD ASSY,E<EXCEPT K>
2	87-085-185-010		BUSHING, AC CORD (E)
⚠ 3	8Z-NF8-606-010		PT,ZNF-8EZ<555EZ,556EZ,K,V>
⚠ 3	8Z-NF8-605-010		PT,ZNF-8HR<HR>
4	8Z-NB8-240-010		COVER, PL
5	84-ZG1-245-210		CAP,OPTICAL
6	86-NFZ-001-010		WINDOW,TOP
7	8Z-NF9-042-010		PANEL,TOP V-2
8	8Z-NB8-011-110		PANEL,LEFT V-2
9	8Z-NF9-043-010		PANEL,RIGHT S V-2
10	8Z-NF8-025-010		PANEL,TRAY U
11	82-NE6-067-010		BADGE,AIWA 30N
12	8Z-NF8-056-010		CABI,REAR EZSTM<555EZ>
12	8Z-NF8-057-010		CABI,REAR EZSTM R<556EZ>
12	8Z-NF8-041-010		CABI,REAR HRJSTNM<HR>
12	8Z-NF8-043-010		CABI,REAR KSTNE<K>
12	8Z-NF8-046-110		CABI,REAR VJSTM<V>
13	87-064-185-010		HLDR,WIRE
14	87-NF4-221-010		HLDR,CABLE
15	8Z-NF8-026-010		KNOB,RTRY JOG
16	8Z-NF8-027-010		KNOB,RTRY VOL
17	8Z-NF8-028-010		KNOB,RTRY MIC<HR>
18	8Z-NF9-204-010		PLATE,MIC<HR>
19	8Z-NF8-009-010		KEY,EDIT<555EZ,556EZ,K,V>
19	8Z-NF8-048-010		KEY,EDIT H<HR>
20	8Z-NF8-050-010		KEY,KARAOKE<HR>
21	8Z-NF8-020-010		KEY,RDS<556EZ>
22	8Z-NF8-008-010		KEY,TIMER
23	8Z-NF8-013-010		KEY,ASSY PLAY
24	8Z-NF8-016-010		KEY,ASSY PAUSE
25	8Z-NF8-006-010		KEY,CD
26	8Z-NF8-010-010		KEY,ASSY FUN
27	8Z-NF8-005-010		KEY,POWER<EXCEPT K>
27	8Z-NF8-005-110		KEY,POWER<K>
28	8Z-NF8-007-010		REFLECTOR,ECO
29	8Z-NF8-029-010		REFLECTOR,JOG
30	8Z-NF8-036-010		WINDOW,DISP E<556EZ>
30	8Z-NF8-034-010		WINDOW,DISP H<HR>
30	8Z-NF8-035-010		WINDOW,DISP K<555EZ,K,V>

REF. NO	PART NO.	KANRI NO.	DESCRIPTION
31	8Z-NF8-024-010		WINDOW,CD
32	87-NF8-220-010		DMPR,150
33	8Z-NF8-022-010		WINDOW,CASS 2
34	8Z-NF8-038-010		BOX,CASS 2H<HR>
34	8Z-NF8-004-010		BOX,CASS 2U<555EZ,556EZ,K,V>
35	8Z-NF8-021-010		WINDOW,CASS 1
36	8Z-NF8-068-010		BOX,CASS 1 E<EXCEPT HR>
36	8Z-NF8-037-010		BOX,CASS 1H<HR>
37	87-NF4-217-010		HLDR,LOCK 2<HR,555EZ,556EZ>
37	87-NF4-217-110		HLDR,LOCK 2<K,V>
38	86-NF9-224-010		SPR-C,LOCK
39	87-NF4-216-010		HLDR,LOCK 1
40	82-NF5-229-010		PLATE,LOCK
41	88-NF5-208-010		HLDR,PWB-M N
42	8Z-NF8-205-110		HLDR,HT-SINK<K,V>
42	8Z-NF8-205-010		HLDR,HT-SINK<HR,555EZ,556EZ>
43	88-NF8-205-010		GUIDE,FL<EXCEPT K>
44	82-NF5-218-010		SPR-T,EJECT 1 (SIN)
45	82-NF5-219-010		SPR-T,EJECT 2 (SIN)
46	81-532-080-010		LABEL, CASS. COMPT
47	8Z-NF8-040-010		CABI,FR E<556EZ>
47	8Z-NF8-033-010		CABI,FR H<HR>
47	8Z-NF8-001-010		CABI,FR U<555EZ,K,V>
A	87-067-703-010		TAPPING SCREW, BVT2+3-10
B	87-721-097-410		QT2+3-12 GLD
C	87-078-191-010		S-SCREW,IT+4-10
D	87-067-688-010		BVTT+3-6
E	87-721-096-410		QT2+3-10 GLD
F	87-067-758-010		BVT2+3-12 W/O SLOT
G	87-067-581-010		TAPPING SCREW, BVT2+3-15
H	87-NF4-224-010		S-SCREW,IT3B+3-8 CU

COLOR NAME TABLE

Basic color symbol	Color	Basic color symbol	Color	Basic color symbol	Color
B	Black	C	Cream	D	Orange
G	Green	H	Gray	L	Blue
LT	Transparent Blue	N	Gold	P	Pink
R	Red	S	Silver	ST	Titan Silver
T	Brown	V	Violet	W	White
WT	Transparent White	Y	Yellow	YT	Transparent Yellow
LM	Metallic Blue	LL	Light Blue	GT	Transparent Green
LD	Dark Blue	DT	Transparent Orange		

TAPE MECHANISM PARTS LIST 1 / 1 <2ZM-3MK2 PR4NM>

If can't understand for Description please kindly refer to " REFERENCE NAME LIST ".

REF. NO	PART NO.	KANRI NO.	DESCRIPTION
1	82-ZM3-301-519		CHAS ASSY,M2
2	82-ZM1-258-110		SPR-T,PINCH L
3	82-ZM1-341-110		LVR ASSY,PINCH L2
4	82-ZM1-333-010		PLATE,LINK 2
5	82-ZM1-266-11K		LVR,DIR
6	82-ZM1-214-010		SPR-T,DIR
7	82-ZM1-206-81K		CHAS,HEAD
8	82-ZM3-307-019		CUSH-G,DIA3.7-8-3.2
9	82-ZM1-269-219		SPR-T,BRG
10	82-ZM1-219-119		SPR-T,LINK
11	82-ZM1-210-119		GEAR,H T
12	82-ZM1-213-019		SPR-T,HEAD
13	82-ZM1-207-619		GUIDE,TAPE
14	86-ZM4-206-010		S-SCREW,AZIMUTH
15	82-ZM1-314-119		PLATE,HEAD
16	82-ZM1-208-119		HLDR,HEAD
17	82-ZM1-218-019		SPR-E,HB
18	82-ZM1-263-110		LVR,EJECT L (DECK 1)
18	82-ZM1-264-010		LVR,EJECT R (DECK 2)
19	82-ZM1-222-21K		LVR,PLAY
20	82-ZM1-217-319		REEL TABLE
21	82-ZM1-244-510		SPR-C,BT
22	82-ZM1-285-310		SPR-C,BT L
23	82-ZM1-257-019		SPR-T,CAS
24	82-ZM1-241-319		LVR,MC
25	82-ZM1-242-019		LVR,CAS
26	82-ZM1-243-019		LVR,STOP
27	82-ZM1-344-110		LVR ASSY,PINCH R2
28	82-ZM1-259-110		SPR-T,PINCH R
29	82-ZM1-240-11K		LVR,REC (DECK 2)
31	82-ZM1-255-319		SPR-E,LVR DIR
32	82-ZM3-305-01K		GEAR,CAM M2
33	82-ZM1-227-21K		LVR,TRIG
34	82-ZM3-306-11K		LVR,FR M2
35	82-ZM1-265-119		SPR-E,TRIG
36	82-ZM1-236-019		CAPSTAN N 2-41.5
37	82-ZM1-239-019		CAPSTAN N 2.2-41.7
38	82-ZM1-322-019		SPR-T,FR60
39	82-ZM1-220-219		GEAR,IDLER
40	82-ZM3-616-019		RING MAGNET 4
41	82-ZM1-216-31K		GEAR,REEL
42	87-A90-319-010		HEAD,PH HADKH2 FPC
42	87-A90-320-010		HEAD,RPH HADKH5 FPC
43	82-ZM1-225-21K		GEAR,FR
44	82-ZM1-226-019		GEAR,REW
45	82-ZM3-333-310		SLIP DISK ASSY 2
46	82-ZM1-338-010		BELT FR4
47	82-ZM1-349-110		FLY-WHL,R W(DECK 2)
47	82-ZM3-338-110		FLY-WHL,R3 W(DECK 1)
48	82-ZM1-348-010		FLY-WHL,L W(DECK 2)
48	82-ZM1-348-010		FLY-WHL,L W(DECK 1)
49	82-ZM3-329-210		BELT,SBU R2
50	82-ZM1-245-210		HLDR,IC
51	87-045-347-019		MOT,SHU2L 70(M1)
52	82-ZM3-221-010		PULLEY,MOT 2M
53	82-ZM1-288-019		SH,1.63-3.2-0.5 SLT
54	80-ZM6-243-019		SH,1.75-3.6-0.5 SLT
55	82-ZM3-335-210		PULLEY,COUPLER M3(DECK 1)
56	82-ZM3-337-010		BELT,SBU MOT 2
57	82-ZM3-339-010		SHAFT,COUPLER N3(DECK 1)
58	86-ZM1-206-010		BELT,MAIN L
59	82-ZM3-340-010		SH,BELT D2
A	85-ZM3-202-010		S-SCREW,TG
B	80-ZM6-207-019		V+1.6-7
C	82-ZM3-318-019		S-SCRW MOTOR M2
D	87-B10-043-010		W-P,0.99-4-0.25 SLT
E	82-ZM3-334-010		PW,2.16-6-0.4

TAPE MECHANISM EXPLODED VIEW 1 / 1 <2ZM-3MK2 PR4NM>

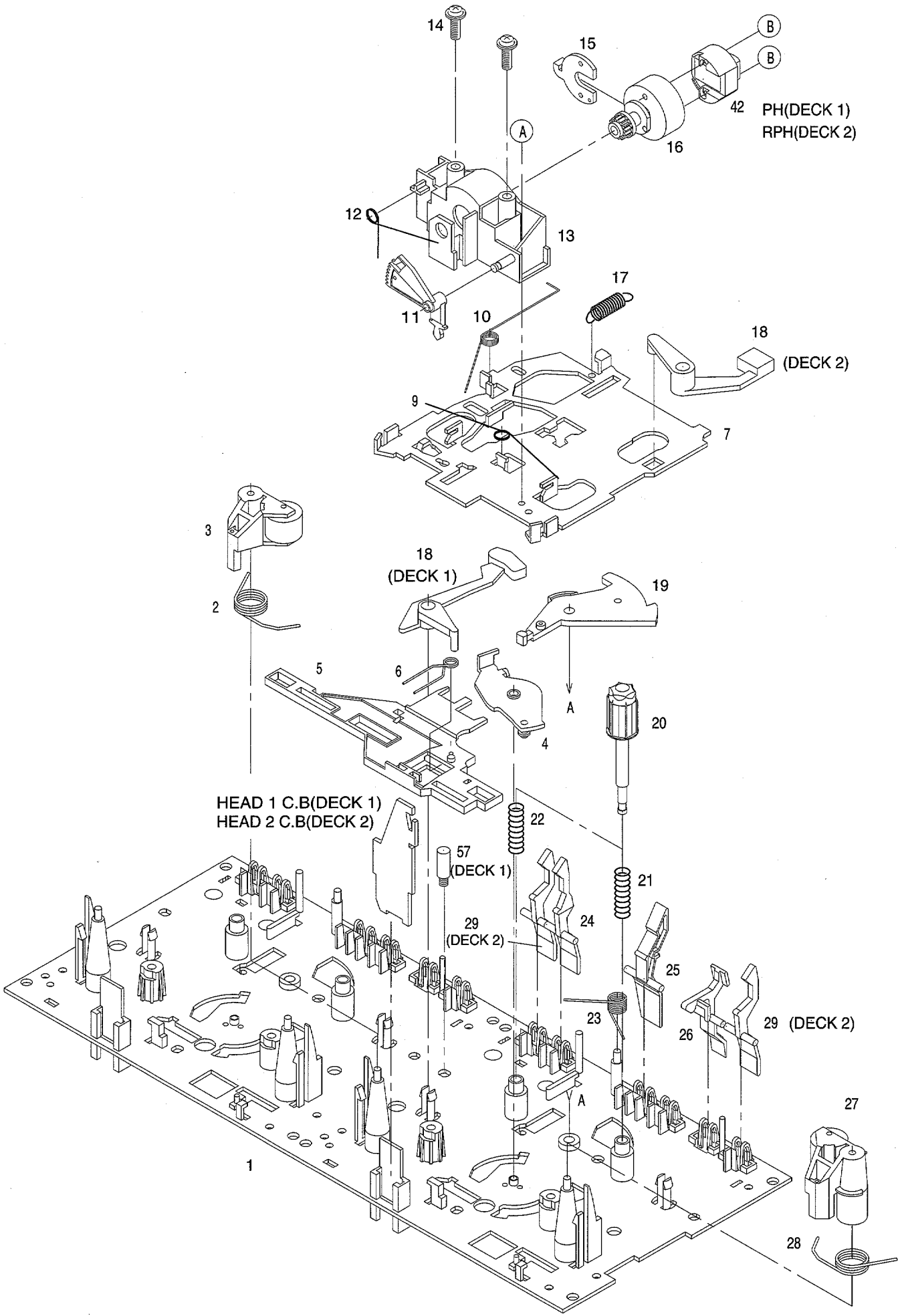

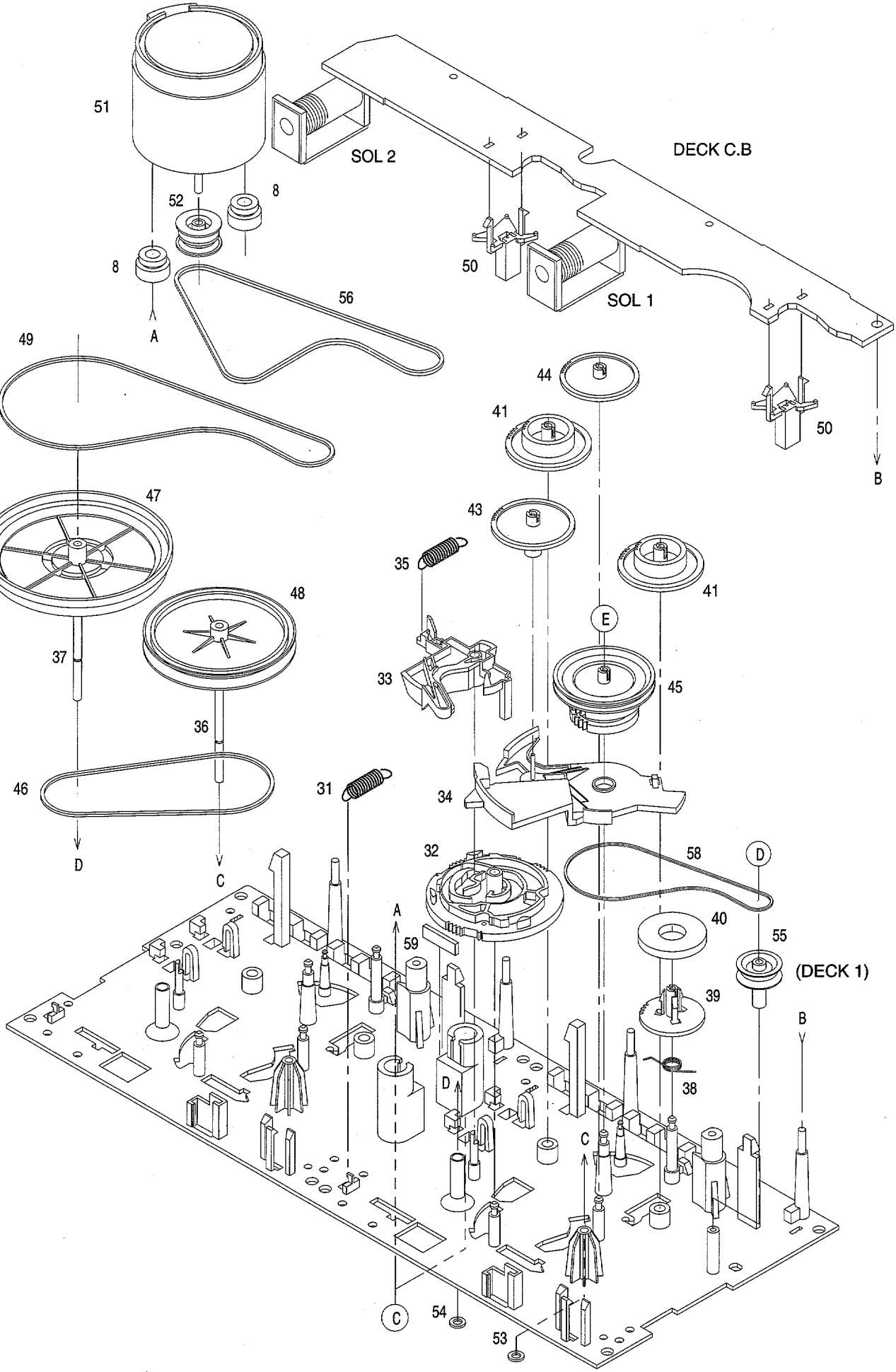
51
SOL 2
DECK C.B
52
8
8
50
SOL 1
56
A
49
44
41
50
B
47
43
35
41
48
E
37
33
45
36
46
31
34
D
C
32
58
D
A
40
55
(DECK 1)
59
39
B
38
D
C
C
54
53

TAPE MECHANISM EXPLODED VIEW 1 / 1 <6ZM-3 PR2NM>

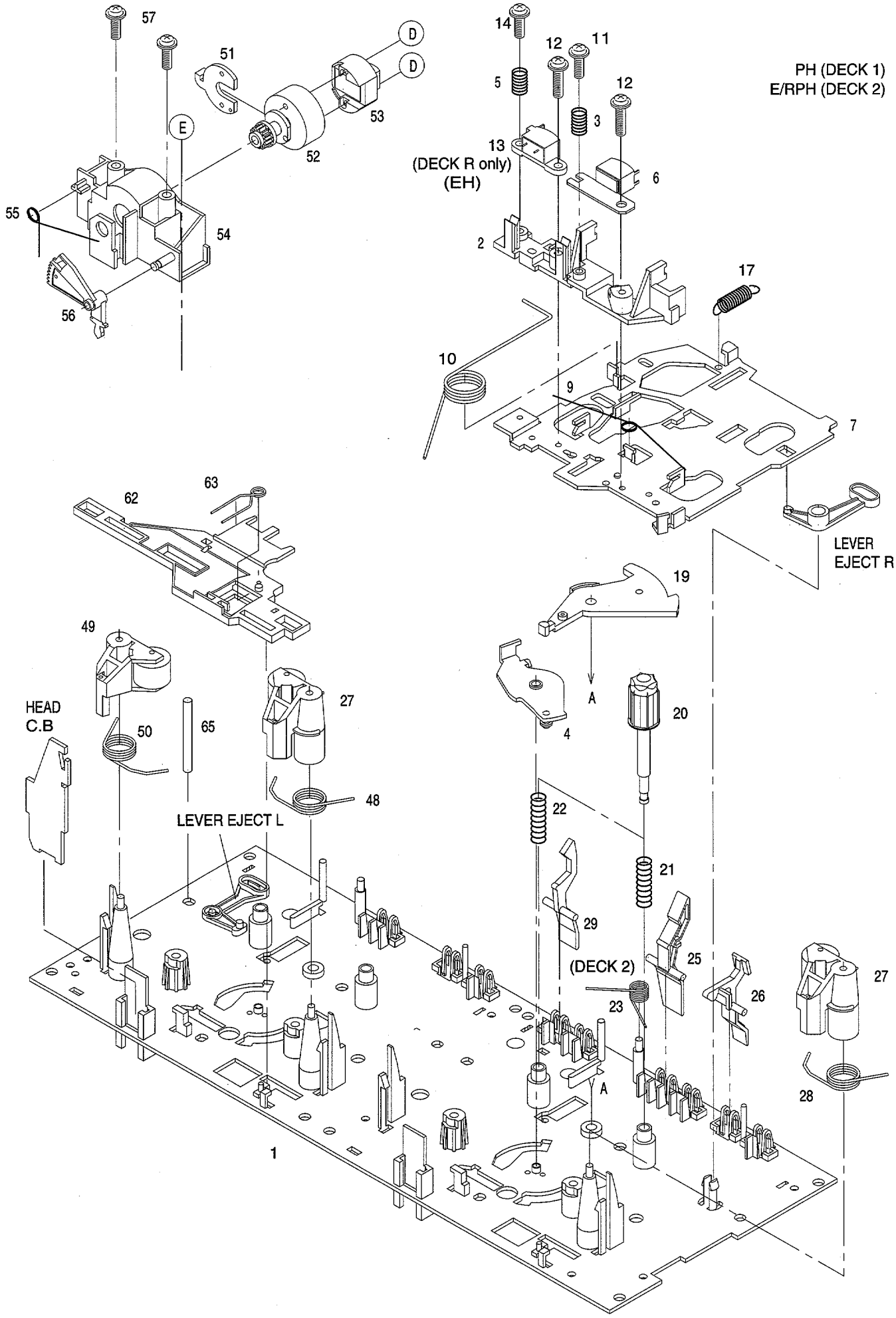

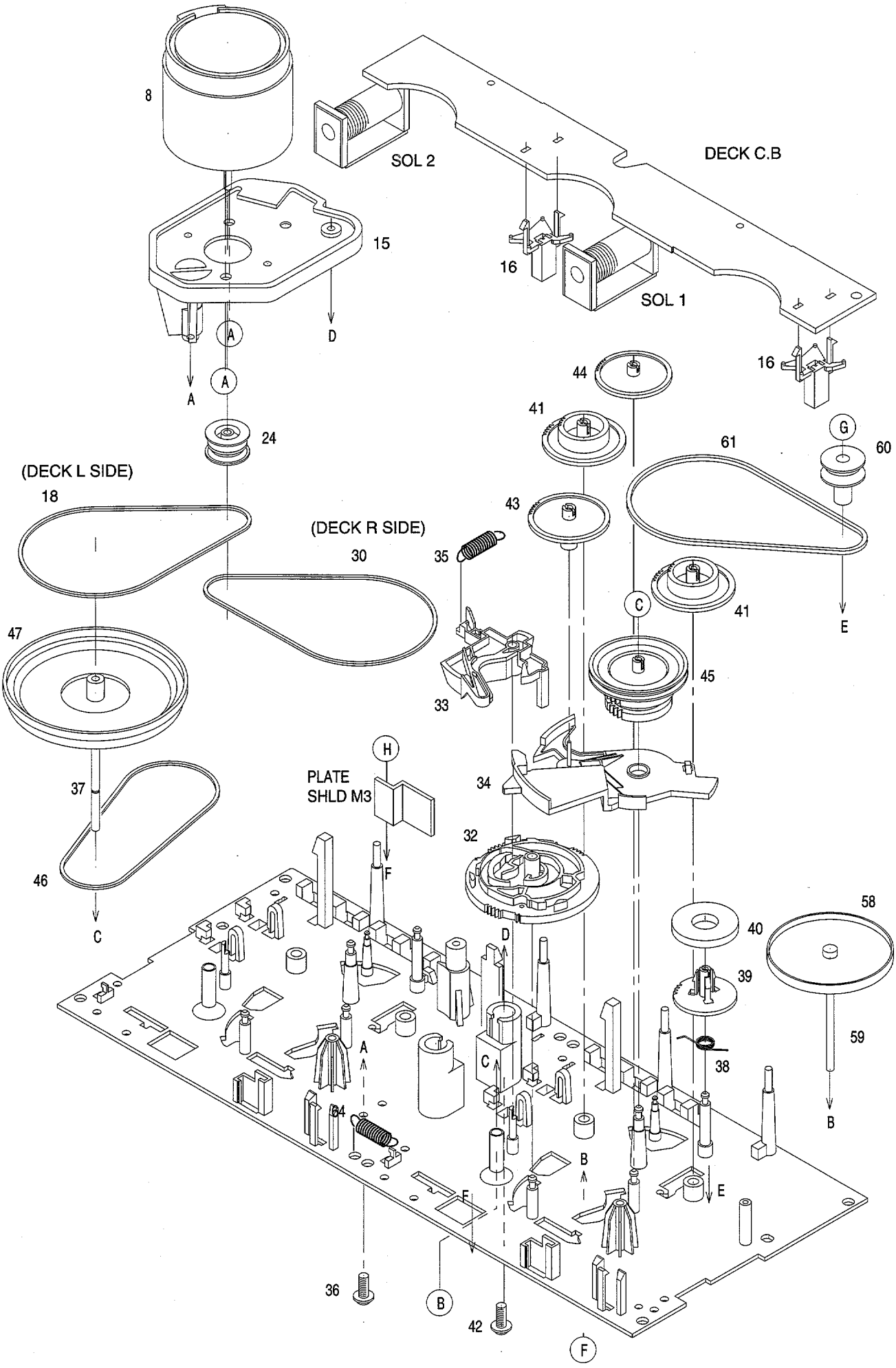
8
SOL 2
DECK C.B
15
16
SOL 1
D
A
A
A
16
44
41
24
G
60
61
(DECK L SIDE)
18
43
(DECK R SIDE)
30
35
C
41
E
47
45
33
H
PLATE
SHLD M3
34
37
32
F
46
C
58
40
D
39
59
A
C
38
64
B
B
E
F
36
B
42
F

TAPE MECHANISM PARTS LIST 1 / 1 <6ZM-3 PR2NM>

If can't understand for Description please kindly refer to " REFERENCE NAME LIST ".

REF. NO.	PART NO.	KANRI NO.	DESCRIPTION
1	86-ZM3-215-010		CHAS ASSY,RS
2	86-ZM3-202-010		BASE,HEAD S
3	86-ZM3-205-010		SPR-C,RPH S
4	82-ZM1-333-210		PLATE,LINK 2
5	86-ZM3-206-010		SPR-C,EH S
6	87-A90-403-019		HEAD,RPH MS15R
7	86-ZM3-201-010		CHAS,HEAD S(DECK L)
7	82-ZM3-206-910		CHAS,HEAD(DECK R)
8	87-045-347-019		MOT,SHU2L 70(M1)
9	82-ZM1-269-219		SPR-T,BRG
10	82-ZM1-219-110		SPR-T,LINK
11	86-ZM3-209-010		S-SCREW,ASIMUTHS
12	86-ZM3-207-010		S-SCREW,RPH
13	87-A90-404-019		HEAD,EH LE15B
14	86-ZM3-208-010		S-SCREW,EH
15	86-ZM3-203-010		HLDR,MOTS
16	82-ZM1-245-210		HLDR,IC
17	82-ZM1-218-019		SPR-E,HB
18	86-ZM3-214-010		BELT,SUB RR
19	82-ZM1-222-219		LVR,PLAY
20	82-ZM1-217-419		REEL TABLE
21	82-ZM1-244-519		SPR-C,BT
22	82-ZM1-285-410		SPR-C,BT L
23	82-ZM1-257-019		SPR-T,CAS
24	82-ZM3-221-010		PULLEY,MOT 2M
25	82-ZM1-242-019		LVR,CAS
26	82-ZM1-243-019		LVR,STOP
27	82-ZM1-344-119		LVR ASSY,PINCH
28	86-ZM3-204-010		SPR-T,PINCHDS
29	82-ZM1-240-119		LVR,REC (DECK 2)
30	86-ZM3-210-010		BELT,RS
32	82-ZM3-305-119		GEAR,CAM M2
33	82-ZM1-227-319		LVR,TRIG
34	82-ZM3-306-110		LVR,FR M2
35	82-ZM1-265-119		SPR-E,TRIG
36	87-761-073-419		VFT2+2.6-6 W/O SLOT
37	82-ZM1-239-019		CAPSTAN N 2.2-41.7
38	82-ZM1-322-019		SPR-T,FR60
39	82-ZM1-220-219		GEAR,IDLER
40	82-ZM3-616-019		RING MAGNET 4
41	82-ZM1-216-319		GEAR,REEL
42	86-ZM3-213-010		S-SCREW,HLDR,MOT 3
43	82-ZM1-225-219		GEAR,FR
44	82-ZM1-226-019		GEAR,REW
45	82-ZM3-333-310		SLIP DISK ASSY 2
46	82-ZM1-338-010		BELT FR4
47	82-ZM1-349-019		FLY-WHL RW (DECK L)
47	82-ZM3-338-010		FLY-WHL R3W (DECK R)
48	82-ZM1-259-210		SPR-T,PINCH R
49	82-ZM1-341-110		LVR ASSY,PINCH L2
50	82-ZM1-258-210		SPR-T,PINCH L
51	82-ZM1-314-110		PLATE,HEAD
52	82-ZM1-208-310		HLDR,HEAD
53	87-A90-366-010		HEAD,PH YK50P-BF414
54	82-ZM1-207-810		GUIDE TAPE
55	82-ZM1-213-010		SPR-T,HEAD
56	82-ZM1-210-110		GEAR,HT
57	86-ZM4-206-010		S-SCREW AZIMUTH L
58	82-ZM1-348-010		FLY-WHL,LW
59	82-ZM1-236-019		CAPSTAN N 2-41.5
60	82-ZM3-335-210		PULLEY,COUPLER M3
61	86-ZM1-206-010		BELT,MAIN L
62	82-ZM1-266-110		LVR,DIR
63	82-ZM1-214-010		SPR-T,DIR
64	82-ZM1-255-310		SPR-E,LVR DIR
65	82-ZM3-339-010		SHAFT,COUPLER N3
A	87-251-071-417		U+2.6-4
B	80-ZM6-243-019		SH,1.75-3.6-0.5 SLT
C	82-ZM3-334-010		PW,2.16-6-0.4
D	80-ZM6-207-010		V+1.6-7
E	85-ZM3-202-010		S-SCREW TG
F	82-ZM1-288-010		SH,1.63-3.2-0.5 SLT
G	87-B10-043-010		W-P,0.99-4-0.25 SLT
H	87-571-032-410		VIT+2-3

SPRING APPLICATION POSITION <2ZM-3MK2 PR4NM>

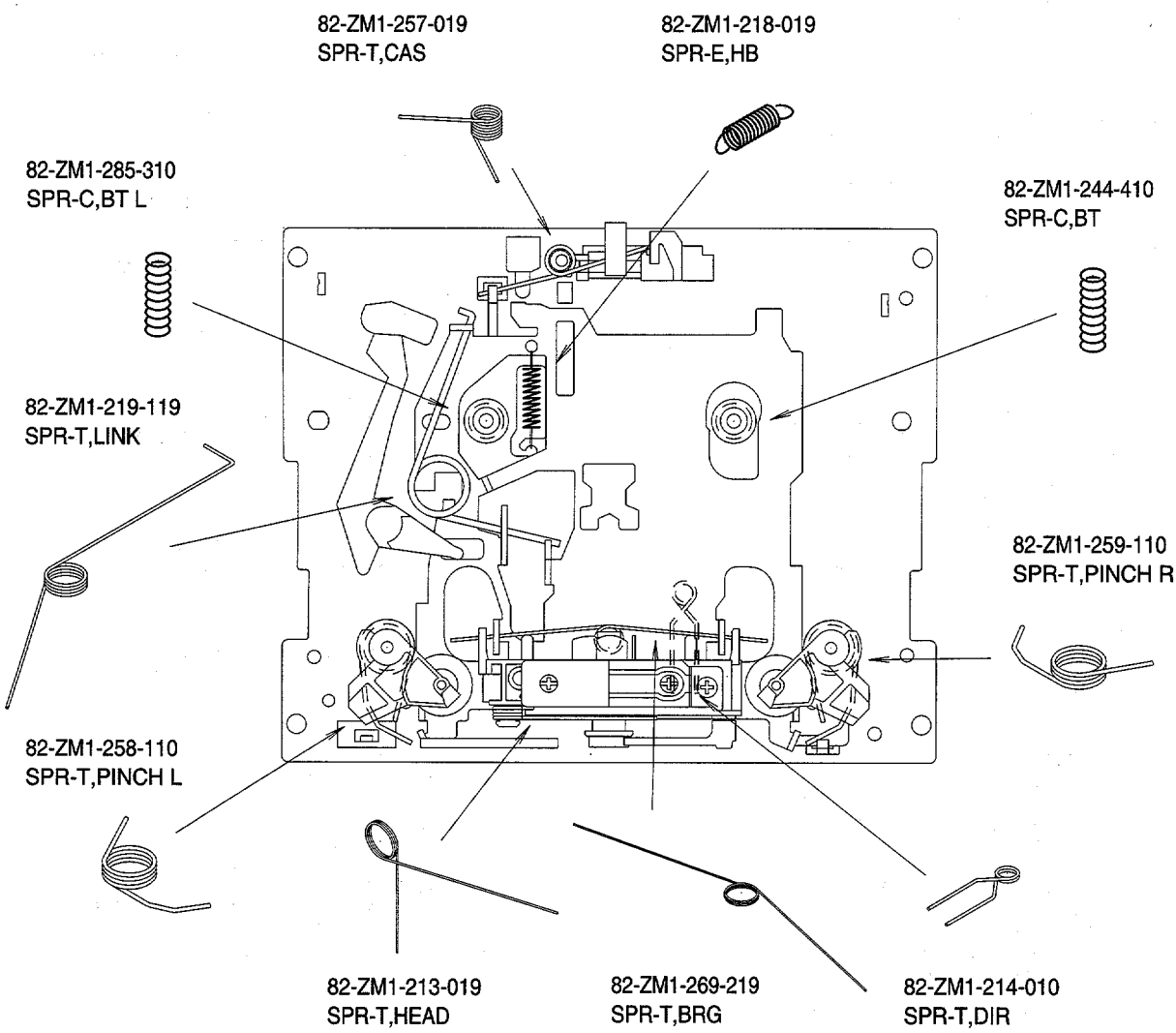

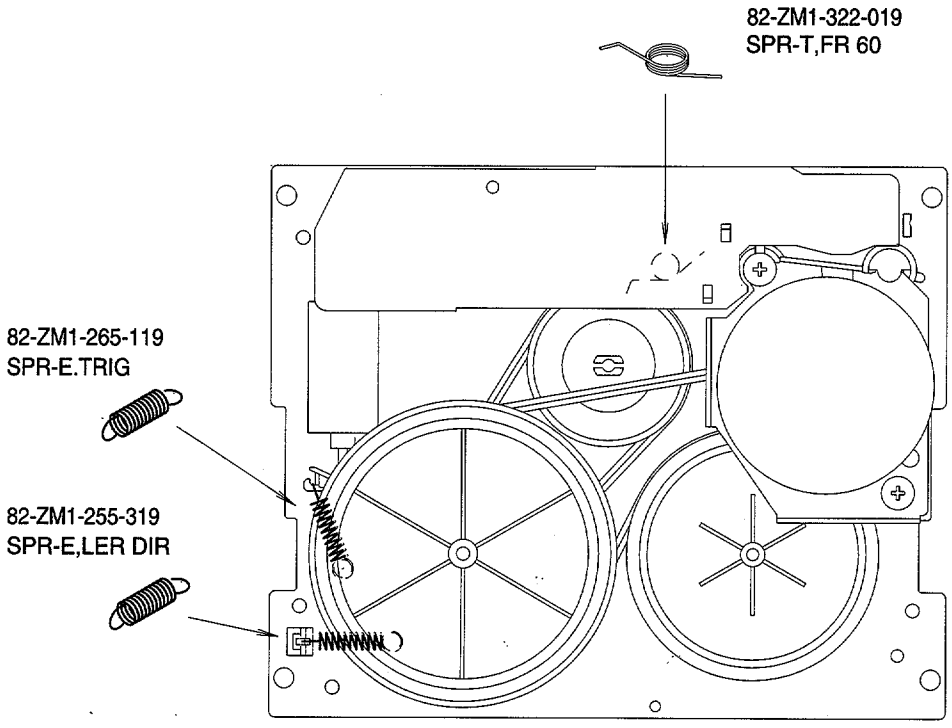

SPRING APPLICATION POSITION <6ZM-3 PR2NM>

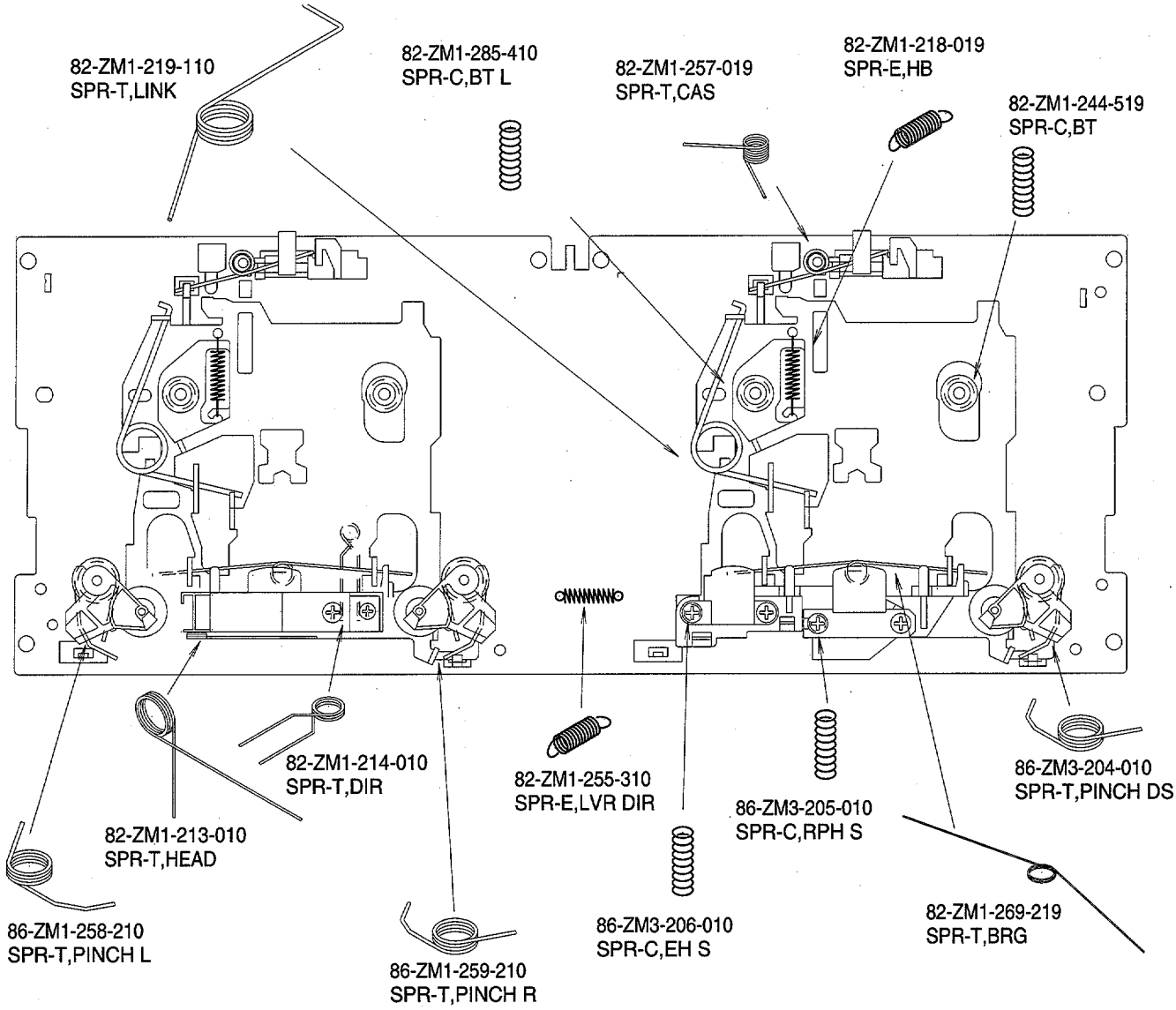

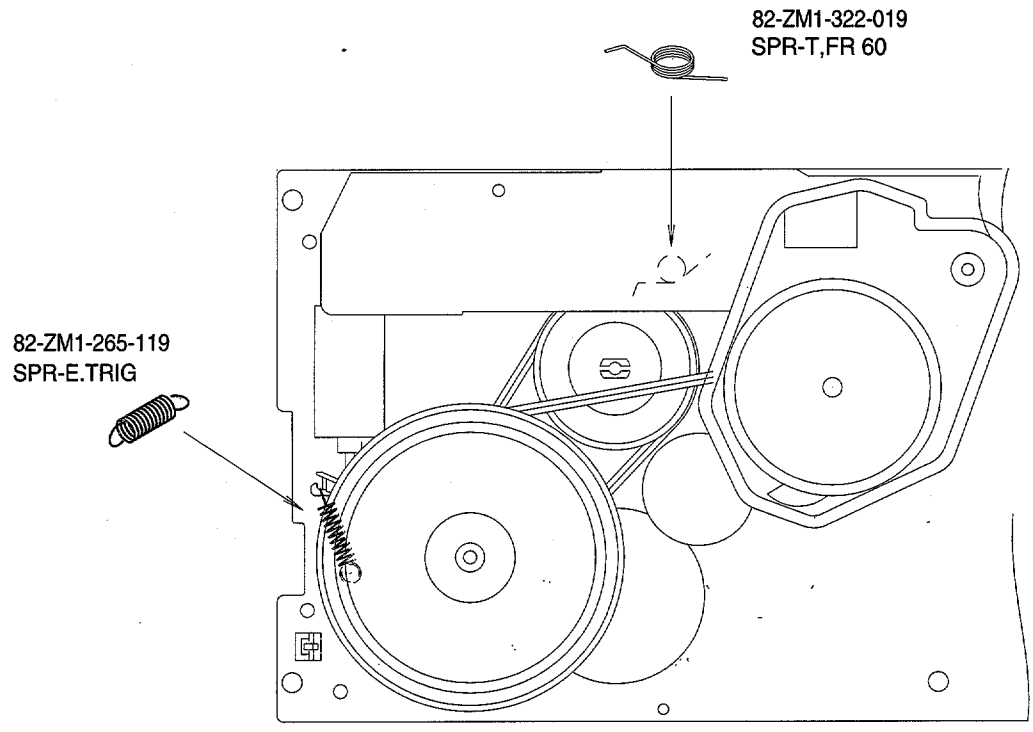

SPEAKER DISASSEMBLY INSTRUCTIONS

Type.1

Insert a flat-bladed screwdriver into the position indicated by the arrows and remove the panel. Remove the screws of each speaker unit and then remove the speaker units.

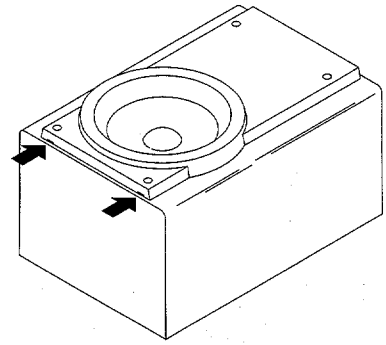

Type.2

Remove the grill frame and four pieces of rubber caps by pulling out with a flat-bladed screwdriver. Remove the screws from hole where installed rubber caps. Insert a flat-bladed screwdriver into the position indicated by the arrows and remove the panel. Remove the screws of each speaker unit and then remove the speaker units.

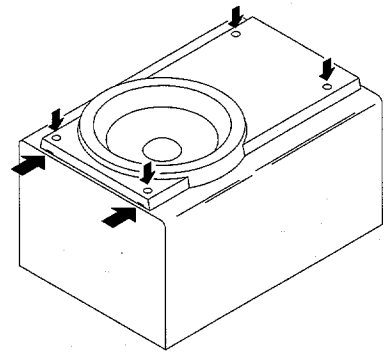

Type.3

Insert a flat-bladed screwdriver into the position indicated by the arrows and remove the panel. Turn the speaker unit to counter-clockwise direction while inserting a flat-bladed screwdriver into one of the hollows around speaker unit, and then remove the speaker unit. After replacing the speaker unit, install it turning to clockwise direction until "click" sound comes out.

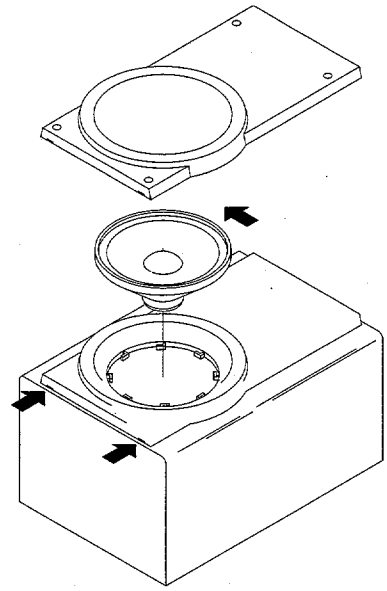

Type.4

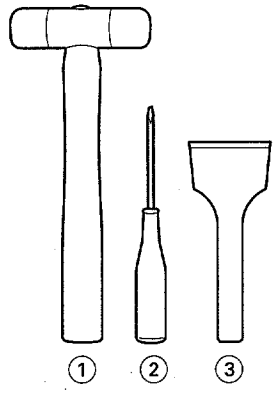

TOOLS

① Plastic head hammer
② (⊖) flat head screwdriver
③ Cut chisel

How to Remove the PANEL, FR

1. Insert the (⊖) flat head screwdriver tip into the gap between the PANEL, FR and the PANEL, SPKR. Tap the head of the (⊖) flat head screwdriver with the plastic hammer head, and create the clearance as shown in Fig-1.

2. Insert the cut chisel in the clearance, and tap the head of the cut chisel with plastic hammer as shown in Fig-2, to remove the PANEL, FR.

3. Place the speaker horizontally. Tap head of the cut chisel with plastic hammer as shown in Fig-3, and remove the PANEL, FR completely.

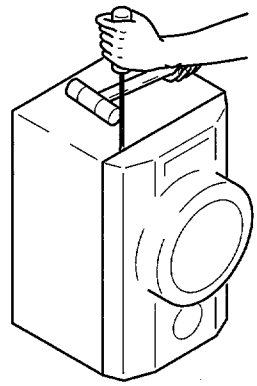

Fig-1

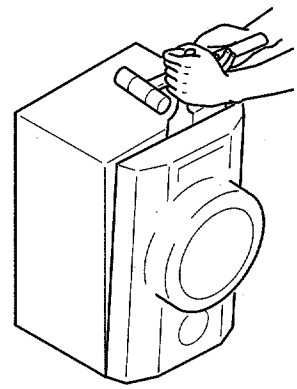

Fig-2

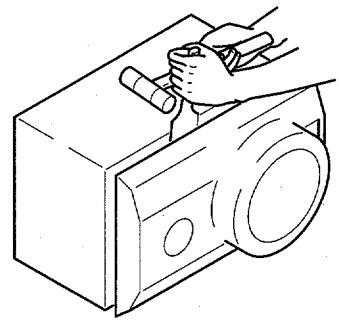

Fig-3

How to Attach the PANEL, FR

Attach the PANEL, FR to the PANEL, SPKR. Tap the four corners of the PANEL, FR with the plastic hammer to fit the PANEL, FR into the PANEL, SPKR completely.

SPEAKER PARTS LIST
SX-WNS555 (YLSTCC, YLSC1C, YLSTL, YLSKM)

If can't understand for Description please kindly refer to " REFERENCE NAME LIST ".

REF. NO.	PART NO.	KANRI NO.	DESCRIPTION
1	88-NS3-029-010		CORD,BUSH L
2	88-NS5-610-010		CORD,SPKR
3	88-NS5-611-010		CORD,SPKR B/L
4	8Z-NS8-002-010		PANEL,BA
5	8Z-NS8-008-010		PANEL,BA 556<556EZ>
6	8Z-NS8-003-010		PROTECTOR, TW
7	8Z-NS8-012-010		PANEL,FR N<YSTC9,YSTY1,YSTY2>
8	8Z-NS8-016-010		GRILL FRAME ASSY<YSTC9,YSTY1,YSTY2>
9	8Z-NSY-003-010		CORD,BUSH
10	8Z-NSY-602-010		SPKR, W 160<YJSTL,YSTL,YJSTC1>
11	8Z-NSY-604-010		SPKR, M 100<YJSTL,YSTL,YJSTC1>
12	8Z-NSY-602-110		SPKR, W 160<YJSTC9,YSTC9>
13	8Z-NSY-604-110		SPKR, M 100<YJSTC9,YSTC9>
14	8Z-NS8-604-010		SPKR, W 160<YSTY1,YSTY2>
15	8Z-NS8-606-010		SPKR, M 100<YSTY1,YSTY2>

ACCESSORIES / PACKAGE LIST

If can't understand for Description please kindly refer to " REFERENCE NAME LIST ".

REF. NO.	PART NO.	KANRI NO.	DESCRIPTION
1	87-A90-054-010		ANT LOOP AM-CON C<HR>
1	87-A90-030-010		ANT LOOP AM-NC C<EXCEPT HR>
2	87-043-106-010		AM,FM 1007AWG<555/556EZ,K>
3	8Z-NF8-701-110		RC UNIT,RC-ZAS01<HR,555/556EZ>
3	8Z-NF8-702-010		RC UNIT,RC-ZAS01<EXCEPT K>
4	8Z-NF8-905-010		IB,K(E)E<K>
4	8Z-NF8-916-010		IB,EZ(9L)M NO RDS-S555<555EZ>
4	8Z-NF8-906-010		IB,EZ(9L)E RDS-S556<556EZ>
4	8Z-NF8-901-110		IB,H(ECA)M<HR>
4	8Z-NF8-907-010		IB,V(ER)M<V>
⚠ 5	87-050-079-010		AC CORD ASSY,E BLK
⚠ 6	87-099-811-010		PLUG,ADPTR CONV(K)<K>
⚠ 6	87-099-789-010		PLUG,ADPTR IR44<HR>
7	87-043-115-010		ANT,FEEDER FM<HR,V>

REFERENCE NAME LIST

ELECTRICAL SECTION

DESCRIPTION	REFERENCE NAME
ANT	ANTENNAS
C-	CHIP
C-CAP	CAP, CHIP
C-CAP TN	CAP, CHIP TANTALUM
C-COIL	COIL, CHIP
C-DI	DIODE, CHIP
C-DIODE	DIODE, CHIP
C-FET	FET, CHIP
C-FOTR	FILTER, CHIP
C-JACK	JACK, CHIP
C-LED	LED, CHIP
C-RES	RES, CHIP
C-SFR	SFR, CHIP
C-SLIDE SW	SLIDE SWITCH, CHIP
C-SW	SWITCH, CHIP
C-TR	TRANSISTOR, CHIP
C-VR	VOLUME, CHIP
C-ZENER	ZENER, CHIP
CAP, CER	CAP, CERA-SOL
CAP, E	CAP, ELECT
CAP, M/F	CAP, FILM
CAP, TC	CAP, CERA-SOL
CAP, TC-U	CAP, CERA-SOL SS
CAP, TN	CAP, TANTALUM
CERA FIL	FILTER, CERAMIC
CF	FILTER, CERAMIC
DL	DELAY LINE
E/CAP	CAP, ELECT
FILT	FILTER
FLTR	FILTER
FUSE RES	RES, FUSE
MOT	MOTOR
P-DIODE	PHOTO DIODE
P-SNSR	PHOTO SENSER
P-TR	PHOTO TRANSISTOR
POLY VARI	VARIABLE CAPACITOR
PPCAP	CAP, PP
PT	POWER TRANSFORMER
PTR, RES	PTR, MELF
RC	REMOTE CONTROLLER
RES NF	RES, NON-FLAMMABLE
RESO	RESONATOR
SHLD	SHIELD
SOL	SOLENOID
SPKR	SPEAKER
SW, LVR	SWITCH, LEVER
SW, RTRY	SWITCH, ROTARY
SW, SL	SWITCH, SLIDE
TC CAP	CAP, CERA-SOL
THMS	THERMISTOR
TR	TRANSISTOR
TRIMER	CAP, TRIMMER
TUN-CAP	VARIABLE CAPACITOR
VIB, CER	RESONATOR, CERAMIC
VIB, XTAL	RESONATOR, CRYSTAL
VR	VOLUME
ZENER	DIODE, ZENER

MECHANICAL SECTION

DESCRIPTION	REFERENCE NAME
ADHESHIVE	SHEET ADHESHIVE
AZ	AZIMUTH
BAR-ANT	BAR-ANTENNA
BAT	BATTERY
BATT	BATTERY
BRG	BEARING
BTN	BUTTON
CAB	CABINET
CASS	CASSETTE
CHAS	CHASSIS
CLR	COLLAR
CONT	CONTROL
CRSR	CURSOR
CU	CUSHION
CUSH	CUSHION
DIR	DIRECTION
DUBB	DUBBING
FL	FRONT LOADING
FLY-WHL	FLYWHEEL
FR	FRONT
FUN	FUNCTION
G-CU	G-CUSHION
HDL	HANDOL
HIMERON	CLOTH
HINGE, BAT	HINGE, BATTERY
HLDR	HOLDER
HT-SINK	HEAT SINK
IB	INSTRUCTION BOOKLET
IDLE	IDLER
IND, L-R	INDICATOR, L-R
KEY, CONT	KEY, CONTROL
KEY, PRGM	KEY, PROGRAM
KNOB, SL	KNOB, SLIDE
LBL	LABEL
LID, BATT	LID, BATTERY
LID, CASS	LID, CASSETTE
LVR	LEVER
P-SP	P-SPRING
PANEL, CONT	PANEL, CONTROL
PANEL, FR	PANEL, FRONT
PRGM	PROGRAM
PULLY, LOAD MO	PULLY, LOAD MOTOR
RBN	RIBBON
S-	SPECIAL
SEG	SEGMENT
SH	SHEET
SHLD-SH	SHIELD-SHEET
SL	SLIDE
SP	SPRING
SP-SCREW	SPECIAL-SCREW
SPACER, BAT	SPACER, BATTERY
SPR	SPRING
SPR-P	P-SPRING
SPR-PC-PUSH	P-SPRING, C-PUSH
T-SP	T-SPRING
TERM	TERMINAL
TRIG	TRIGGER
TUN	TUNING
VOL	VOLUME
W	WASHER
WHL	WHEEL
WORM-WHL	WORM-WHEEL

サービス技術ニュース	
番号	連絡内容
G－ －	
G－ －	
G－ －	

アイワ株式会社
AIWA CO.,LTD.

9820527, 931261
Tokyo Japan

〒110-8710 東京都台東区池之端1-2-11 ☎03（3827）3111（代表）

Printed in Singapore