AKAI

MODEL CD-A30

SCHEMATIC DIAGRAM AND PC BOARD

TABLE OF CONTENTS

1. SCHEMATIC DIAGRAM OF ICs 3
2. BLOCK DIAGRAM 9
3. SCHEMATIC DIAGRAM 10
4. PC BOARD 11

www.hifiengine.com

PURPOSE OF EACH IC's

IC No.	NAME OF IC's	PURPOSE
IC1, 2	MPC4082C	DUAL LOW NOISE OPERATIONAL AMPLIFIER
IC3, 6	M5218P	DUAL LOW NOISE OPERATIONAL AMPLIFIER
IC4, 5	M5238P	DUAL LOW NOISE OPERATIONAL AMPLIFIER
IC7	CX23035	EFM DEMODULATOR, ERROR DETECTION AND CORRECTION FRAME SYNC DETECTION, SUB CODE DETECTION AND DEMODULATION, SPINDLE MOTOR SERVO
IC8	CX20109	RF AMPLIFIER
IC9	CX20108	SERVO SIGNAL PROCESSER
IC10	CX20133	16 BIT D/A CONVERTOR
IC11	BA6109	LOADING MOTOR CONTROL
IC12	CXK5816P-15L	16K BIT RANDAM ACCESS MEMORY
IC13	TC4011BP	NAND GATE
IC14	M50745	SYSTEM CONTROL (8 BIT MICROCOMPUTER)
IC15	MB84053B	TRIPE-2 CHANNEL MULTIPLEXER/DEMULTIPLEXER

www.hifiengine.com

IC BLOCK DIAGRAM
CX20133
16 Bits D/A CONVERTOR

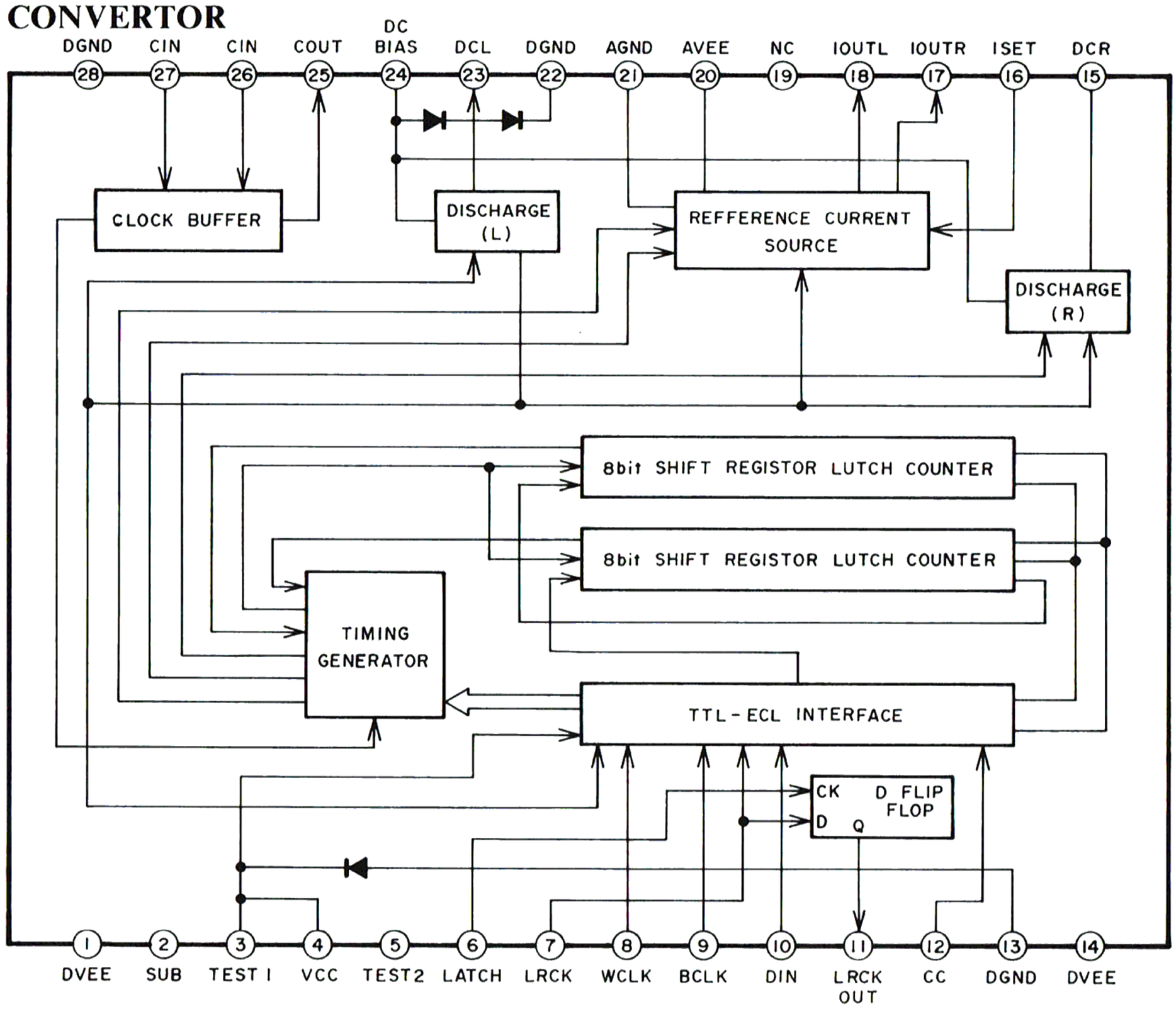

CX20133

Pin No.	Symbol	Description	
1	DVEE	–5V	
2	SUB	Substrate –5V, same level as DVEE	
3	TEST 1	NC	
4	VCC	+5V	
5	TEST 2	NC	
6	LATCH	Clock input for D-Flip Flop	
7	LRCK	L-ch, R-ch clock, "Low" R-ch, "High"L-ch	
8	WCLK	Word Clock	
9	BCLK	Bit Clock	
10	DIN	Data In	
11	LRCK OUT	L-ch, R-ch Clock Out	
12	CC	Conversion command input	
13	DGND	Digital GND	
14	DVEE	–5V	
15	DCR	R-ch discharge control signal out	LRCK"HIGH"
16	ISET	Current set control signal for IOUTR, IOUTL	
17	IOUTR	R-ch current signal OUT	LRCK "HIGH"
18	IOUTL	L-ch current signal OUT	LRCK "LOW"
19	—	NC	
20	AVEE	–5V	
21	AGND	Analog GND	
22	DGND	Digital GND	
23	DCL	L-ch discharge control signal out	LRCK "LOW"
24	DC BIAS	DC Bias for discharge (2.5 mA)	
25	COUT	Clock Out	
26	CIN	Clock In	
27	$\overline{\text{CIN}}$	Clock In	
28	DGND	Digital GND	

www.hifiengine.com

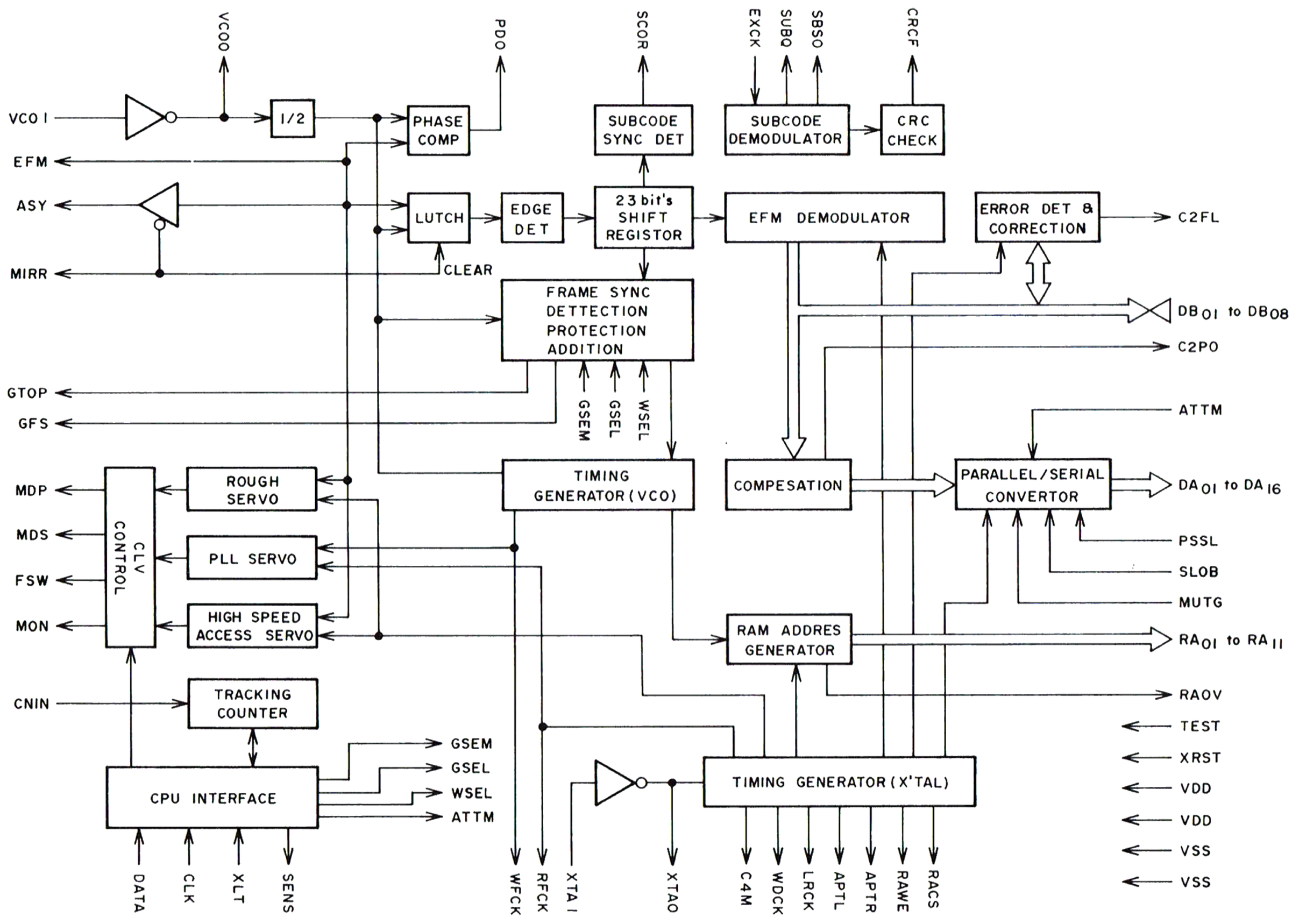

CX23035

Pin No.	Symbol	I/O	Description
1	FSW	O	Spindle motor filter switching control
2	MON	O	Spindle motor ON/OFF control
3	MDP	O	Spindle motor speed and phase control
4	MDS	O	Spindle motor speed control
5	EFM	I	EFM signal input
6	ASY	O	EFM signal slice level control
7	MIRR	I	MIRR signal input "L" on track "H" mirror
8	VCOO	O	VCO output f = 8.6436 MHz
9	VCOI	I	VCO input
10	TEST	I	0V (GND)
11	PDO	O	Phase comp. output
12	VSS	—	GND (0V)
13	CLK	I	Clock signal from CPU
14	XLT	I	Lutch signal from CPU
15	DATA	I	Serial data from CPU
16	XRST	I	RESET input "L" reset
17	CNIN	I	Tracking pulse input (+5V)
18	SENS	O	Output of CPU interface
19	MUTG	I	Mute control signal input
20	CRCF	O	CRC check output of the subcode Q "L" detect error
21	EXCK	I	Not used
22	SBSO	O	Not used
23	SUBQ	O	Subcode Q output
24	SCOR	O	Subcode sync detection output
25	WFCK	O	Not used (Write frame clock)
26	RFCK	O	Not used (Read frame clock)
27	GTOP	O	Frame sync detection output
28	GFS	O	"H" frame sync lock "L" frame sync unlock

Pin No.	Symbol	I/O	Description	
29	DB08	I/O	Data 8 (MSB)	Data Bus line for the EXT. RAM (CXK5816P-15L)
30	DB07	I/O	Data 7	
31	DB06	I/O	Data 6	
32	DB05	I/O	Data 5	
33	VDD	—	+5V	
34	DB04	I/O	Data 4	Data Bus line for the EXT. RAM (CXK5816P-15L)
35	DB03	I/O	Data 3	
36	DB02	I/O	Data 2	
37	DB01	I/O	Data 1 (LSB)	
38	RA01	O	ADDR01 (LSB)	Address signal output for the EXT. RAM (CXK5816P-15L)
39	RA02	O	ADDR02	
40	RA03	O	ADDR03	
41	RA04	O	ADDR04	
42	RA05	O	ADDR05	
43	RA06	O	ADDR06	
44	RA07	O	ADDR07	
45	RA08	O	ADDR08	
46	RA09	O	ADDR09	
47	RA10	O	ADDR10	
48	RA11	O	ADDR11 (MSB)	
49	RAWE	O	Write enable signal output "L" active	
50	RACS	O	Chip select signal output "L" active	
51	C4M	O	Not used	
52	VSS	—	GND (0V)	
53	XTAI	I	X'TAL OSC. input f=8.4672 MHz	
54	XTAO	O	X'TAL OSC. output f=8.4672 MHz	
55	C2FL	O	Monitor of error detection *	
56	C2PO	O	Not used	
57	RAOV	O	Not used	
58	SLOB	I	0V (GND)	
59	PSSL	I	0V (GND)	
60	APTR	O	Not used	
61	APTL	O	Not used	
62	DA01	O	C1F1 *	
63	DA02	O	C1F1 *	
64	DA03	O	C2F1 *	Not used
65	DA04	O	C2F2 *	Not used
66	DA05	O	UGFS	Not used
67	DA06	O	$\overline{\text{WFCK}}$ INV write frame clock signal output	
68	DA07	O	Not used FCKV 1/4 or 1/8 WFCK output	
69	DA08	O	Not used FCKX 1/4 or 1/8 RFCK output	
70	DA09	O	Not used $\overline{\text{PLCK}}$ 1/2 VCO output	
71	DA10	O	Not used $\overline{\text{LRCK}}$ INV. LRCK (Pin 80)	
72	DA11	O	Not used C4LR 176.4 kHz strobe signal output	
73	VDD	—	+5V	
74	DA12	O	Not used $\overline{\text{DENL}}$ L-ch serial data enable signal	
75	DA13	O	Not used $\overline{\text{DENR}}$ R-ch serial data enable signal	
76	DA14	O	$\overline{\text{C210}}$ INV. C210 (Pin 77)	
77	DA15	O	Not used C210 Bit clock	f=2.1168 MHz
78	DA16	O	Data output	
79	WDCK	O	Worde clock output	88.2 kHz strobe signal
80	LRCK	O	L-ch, R-ch clock output	44.1 kHz strobe signal

* Monitor Signal refer to Fig. 1 & Fig. 2

C1F1	C1F2	C1 Correction
O	O	No error
I	O	Signal error correction
O	I	Double error correction
I	I	Irretrievable error

Fig. 1

C2F1	C2F2	C2FL	C2 Correction
O	O	O	No error
I	O	O	Signal error correction
O	I	O	Double error correction
I	I	I	Irretrievable error

Fig. 2

www.hifiengine.com

CXK5816P-15L

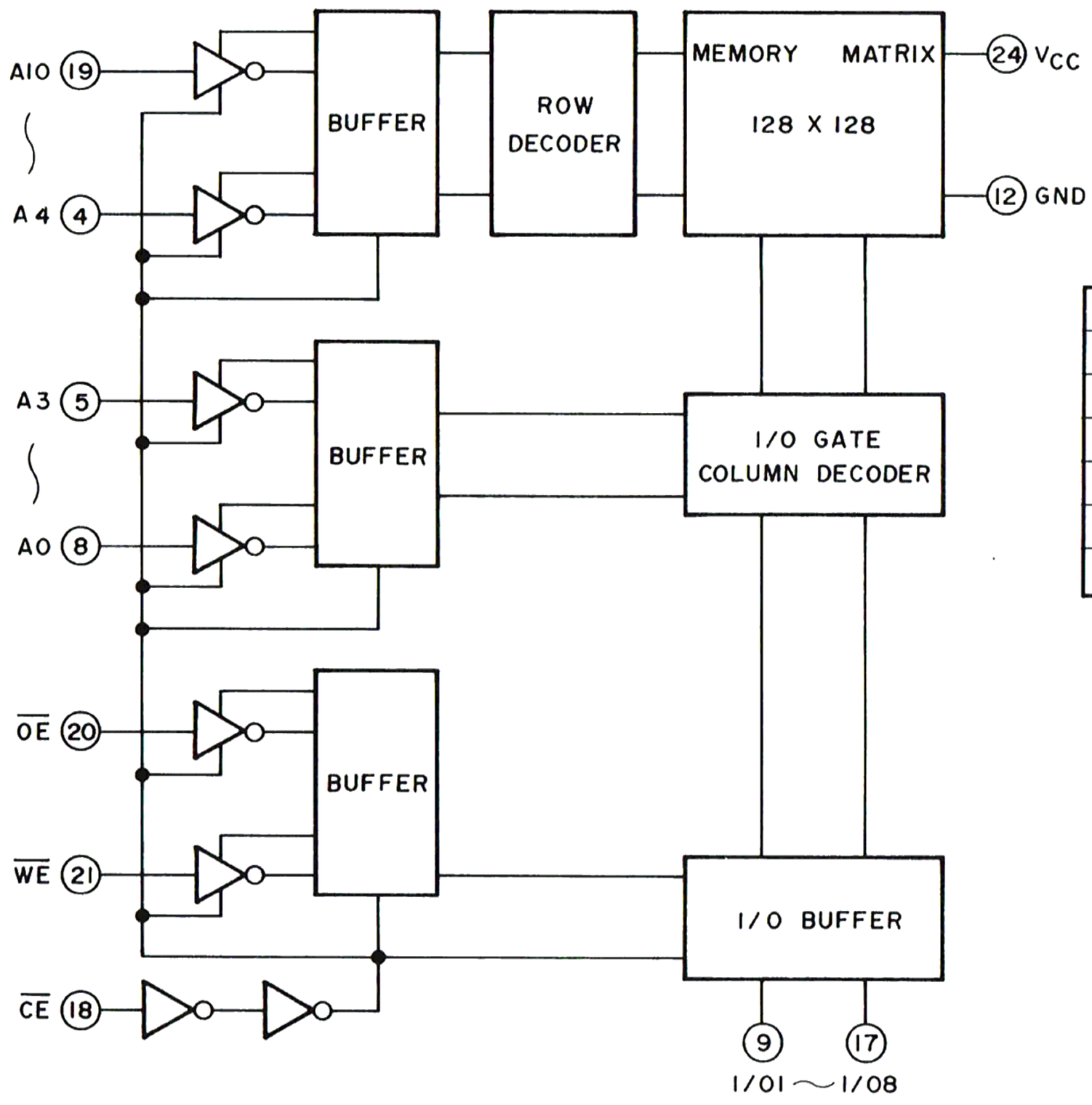

A0 ~ A10	Address input
I/O1 ~ I/O8	Data IN/OUT
$\overline{CE}$	Chip enable signal input
$\overline{WE}$	Write enable signal input
$\overline{OE}$	Output enable signal input
Vcc	+5V
GND	GND

www.hifiengine.com

LC7580

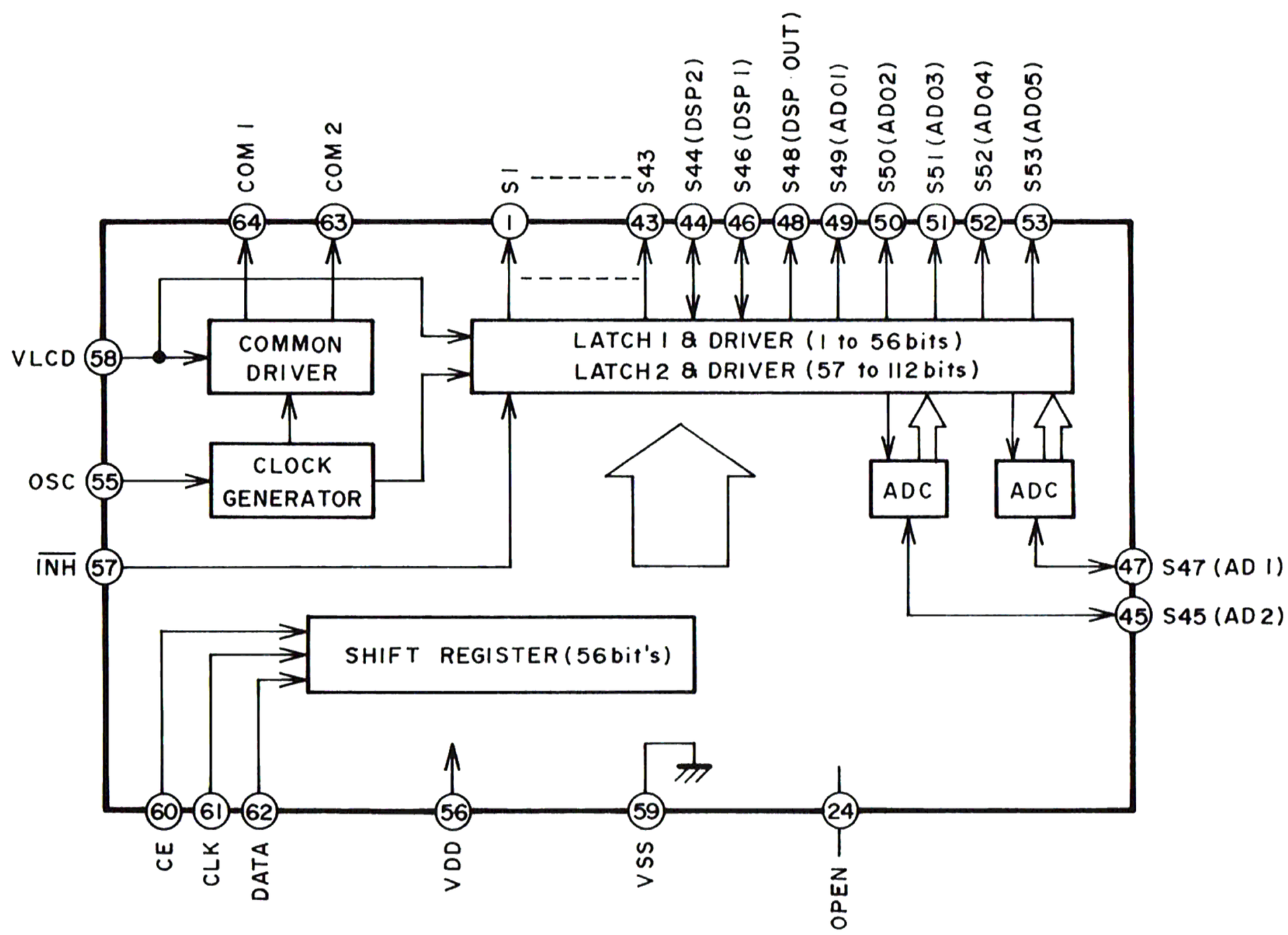

S1 ~ S43	Segment drive Output
S46 (DSP), S44 (DSP2)	Segment drive Output/DSP Input
S47 (AD1), S45 (AD2)	Segment drive Output/AD Input
S48 (DSP OUT)	Segment drive Output/DSP Output
S49 ~ S53	Segment drive Output/AD Output
COM 1, 2	Common Output
V LCD	LCD Bias voltage
OSC	OSC control
CE, CLK. Data	Serial data Input
VSS, VDD	GND, +5V
$\overline{\text{INH}}$	Display OFF signal Input
Open	Not used

M5218P, M5238P, μPC4082C

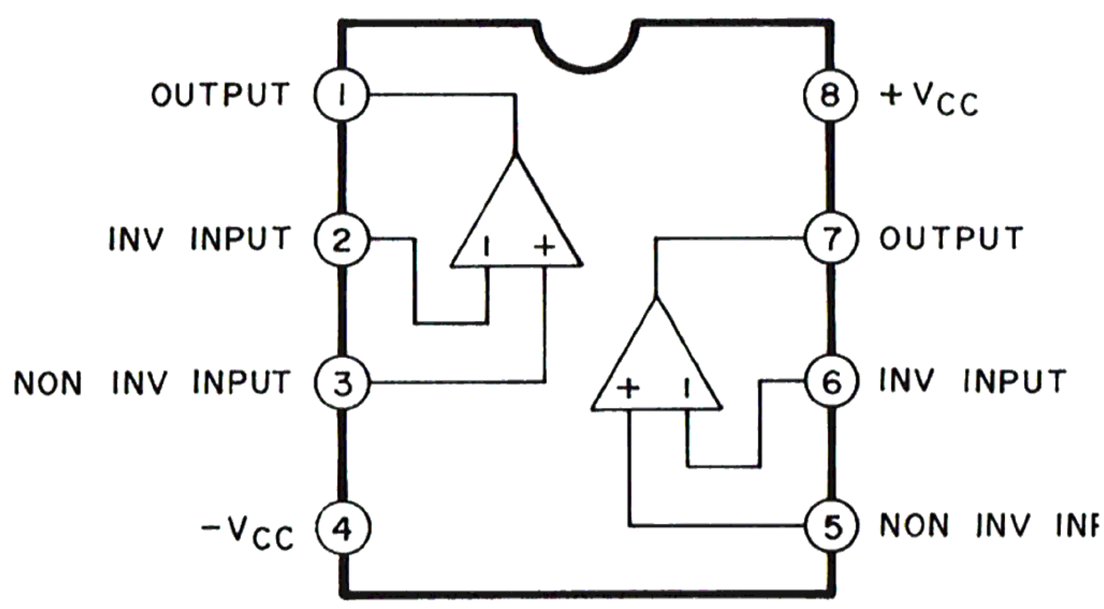

www.hifiengine.com

MB84053

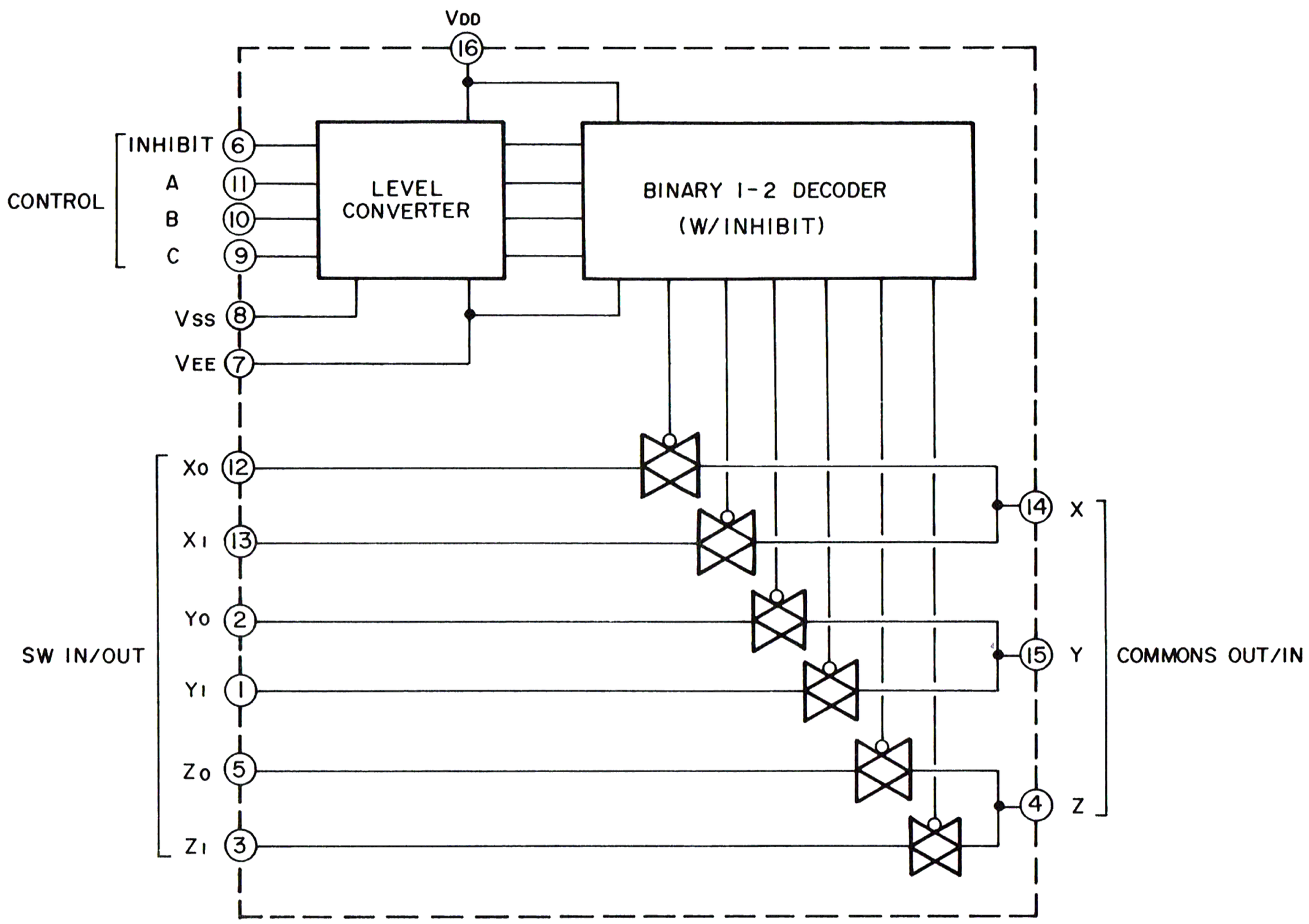

Controls				"ON" channel		
INH	C	B	A			
0	0	0	0	Z_0	Y_0	X_0
0	0	0	1	Z_0	Y_0	X_1
0	0	1	0	Z_0	Y_1	X_0
0	0	1	1	Z_0	Y_1	X_1
0	1	0	0	Z_1	Y_0	X_0
0	1	0	1	Z_1	Y_0	X_1
0	1	1	0	Z_1	Y_1	X_0
0	1	1	1	Z_1	Y_1	X_1
1	–	–	–	None		

M50745

Pin No.	Symbol	Description
1	$P4_2$	Not used
2	$P4_1$	
3	$P4_0$	Not used
4	$P2_7$	Write focus clock input
5	$P2_6$	Sens signal input
6	NC	Not used

www.hifiengine.com

Pin No.	Symbol	Description
7	NC	Not used
8	NC	Not used
9	SCOR	Subcode detection signal input
10	FOK	Focus servo "OK" signal input
11	GFS	"H" frame sync lock "L" frame unlock
12	GTOP	Frame sync detection signal input
13	CRCF	CRC check signal input
14	SUBQ	Subcode Q input
15	MUTG	Mute control signal output
16	CLK	Clock signal output
17	DATA	Data signal output
18	SIN	Not used
19	XLT	Lutch signal output
20	DIRC	Track jamp control signal output "H" normal, "L" track jamp
21	SCGT	Subcode gate signal output
22	WFGT	Write frame gate signal output
23	CNTR	Sens signal input from IC7
24	$\overline{INT_1}$	Sens signal input from IC13
25	$\overline{INT_2}$	Sens signal input from IC7
26	CNVss	0V (GND)
27	$\overline{RESET}$	Reset signal input
28	XIN	Clock input
29	XOUT	Clock output
30	ϕ	Not used
31	$\overline{RESET\ OUT}$	Reset signal output
32	Vss	0V (GND)
33	$P5_7$	Not used
34	$P5_6$	Not used
35	$P5_5$	Key input (Skip ⏮, display)
36	$P5_4$	Key input (Stop, skip ⏭)
37	$P5_3$	Key input (Search ◀◀, repeat)
38	$P5_2$	Key input (Open/Close, Clear)
39	$P5_1$	Key input (Search ▶▶, MA ⟷ MB)
40	$P5_0$	Key input (Play/pause, Program)
41	PI_7	} Data strobe out for operation key
42	PI_6	
43	PI_5	0V (GND)
44	PI_4	Not used
45	PI_3	Pick up block in switch input
46	PI_2	Not used
47	PI_1	Disk tray close switch input
48	PI_0	Disk tray open switch input
49	LASER	Laser control signal output
50	EMP	Emphasis control signal output
51	KICK	Not used
52	$P\phi_4$	Not used
53	SYNC 1	Not used
54	SYNC 0	Synchronize signal output
55	LD OUT	Loading motor out control signal
56	LD IN	Loading motor in control signal
57	NC	Not used
58	NC	Not used
59	VCC	+5V
60	$\overline{INH}$	Display off signal output
61	OE	} Serial data output for display
62	LCLK	
63	LCDATA	
64	$P4_3$	Not used

www.hifiengine.com

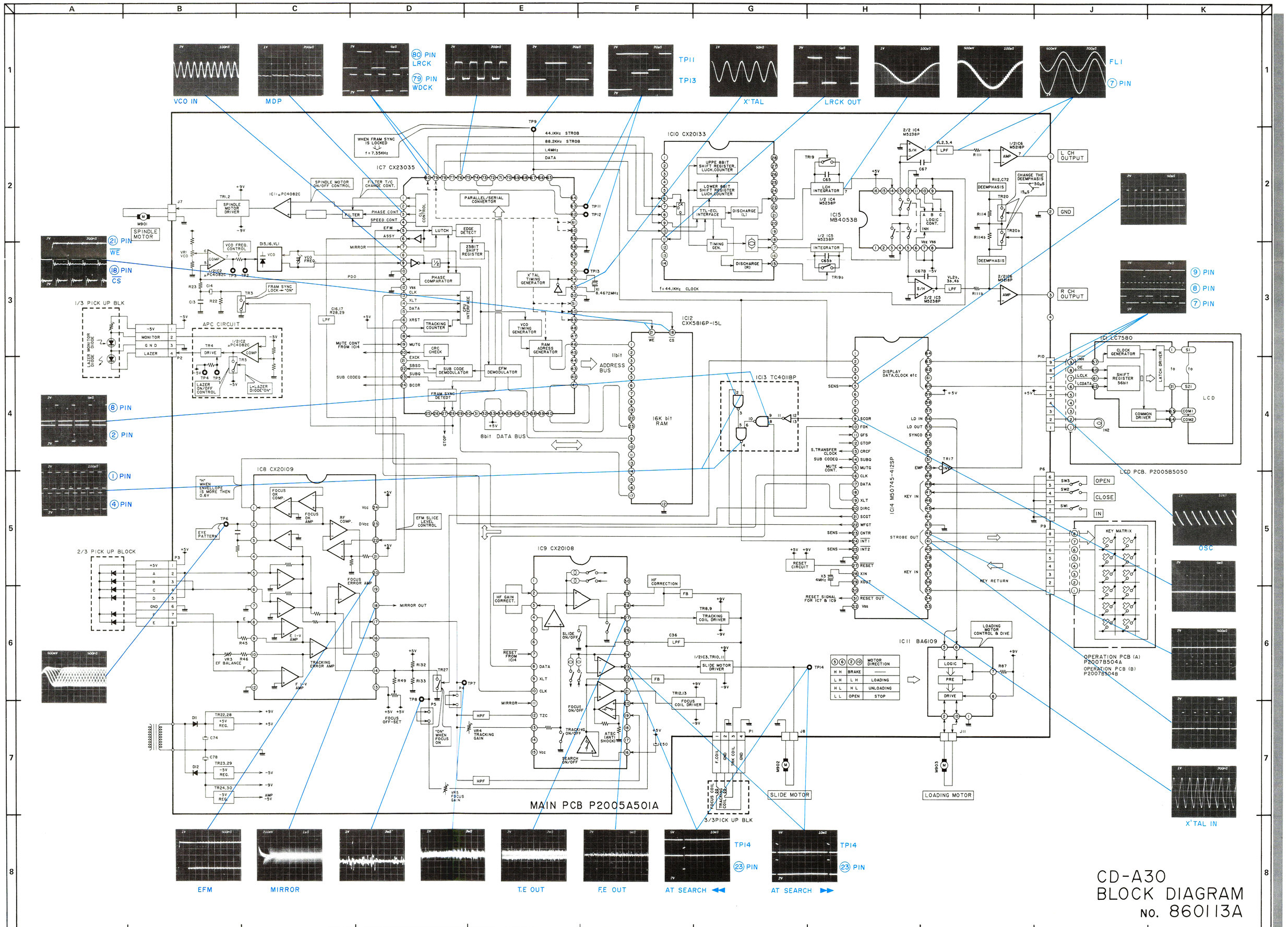
VCO IN
MDP
80 PIN LRCK
79 PIN WDCK
TPI1
TPI3
X'TAL
LRCK OUT
FLI
7 PIN
21 PIN WE
18 PIN CS
9 PIN
8 PIN
7 PIN
8 PIN
2 PIN
1 PIN
4 PIN
OSC
X'TAL IN
EFM
MIRROR
T.E OUT
F.E OUT
TPI4
23 PIN
AT SEARCH ◀◀
AT SEARCH ▶▶
IC7 CX23035
IC10 CX20133
IC12 CXK5816P-15L
IC13 TC4011BP
IC14 M50745-412SP
IC15 MB4053B
IC8 CX20109
IC9 CX20108
IC11 BA6109
IC1 LC7580
16K bit RAM
8bit DATA BUS
11bit ADDRESS BUS
SPINDLE MOTOR
1/3 PICK UP BLK
2/3 PICK UP BLOCK
3/3PICK UP BLK
APC CIRCUIT
SLIDE MOTOR
LOADING MOTOR
L CH OUTPUT
R CH OUTPUT
GND
LCD
LCD PCB. P2005B5050
OPERATION PCB (A) P20078504A
OPERATION PCB (B) P20078504B
MAIN PCB P2005A501A
CD-A30
BLOCK DIAGRAM
NO. 860113A

EXPLANATION OF LCD.

PIN NO.	1	2	3	4	5	6	7	8	9	10	11	12	13	14	15	16	17	18	19	20	21	22	23	24
COM1	COM	—	▶	M-A M-B	INDIVI-DUAL	RE-PEAT	1d	1e	1f	1g	2d	2e	2f	2g	—	3d	3e	3f	3g	4d	4e	4f	4g	INDEX NO.
COM2	—	COM	❚❚	PRO-GRAM	TOTAL	—	—	1c	1a	1b	—	2c	2a	2b	MUSIC NO.	—	3c	3a	3b	—	4c	4a	4b	MIN SEC

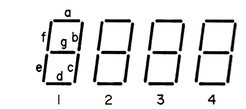

注意：⚠の付された部品は、安全上重要部品です。交換の際は、指定部品以外は使用しないこと。

WARNING: ⚠ INDICATES SAFETY CRITICAL COMPONENTS.
FOR CONTINUED SAFETY, REPLACE SAFETY CRITICAL COMPONENTS ONLY WITH MANUFACTURER'S RECOMMENDED PARTS.

AVERTISSEMENT: ⚠ IL INDIQUE LES COMPOSANTS CRITIQUES DE SURETE POUR MAINTENIR LE DEGRE DE SECURITE DE L'APPAREIL. NE REMPLACER LES COMPOSANTS DONT LE FONCTIONNEMENT EST CRITIQUE POUR LA SECURITE QUE PAR DES PIECES RECOMMANDEES PAR LE FABRICANT.

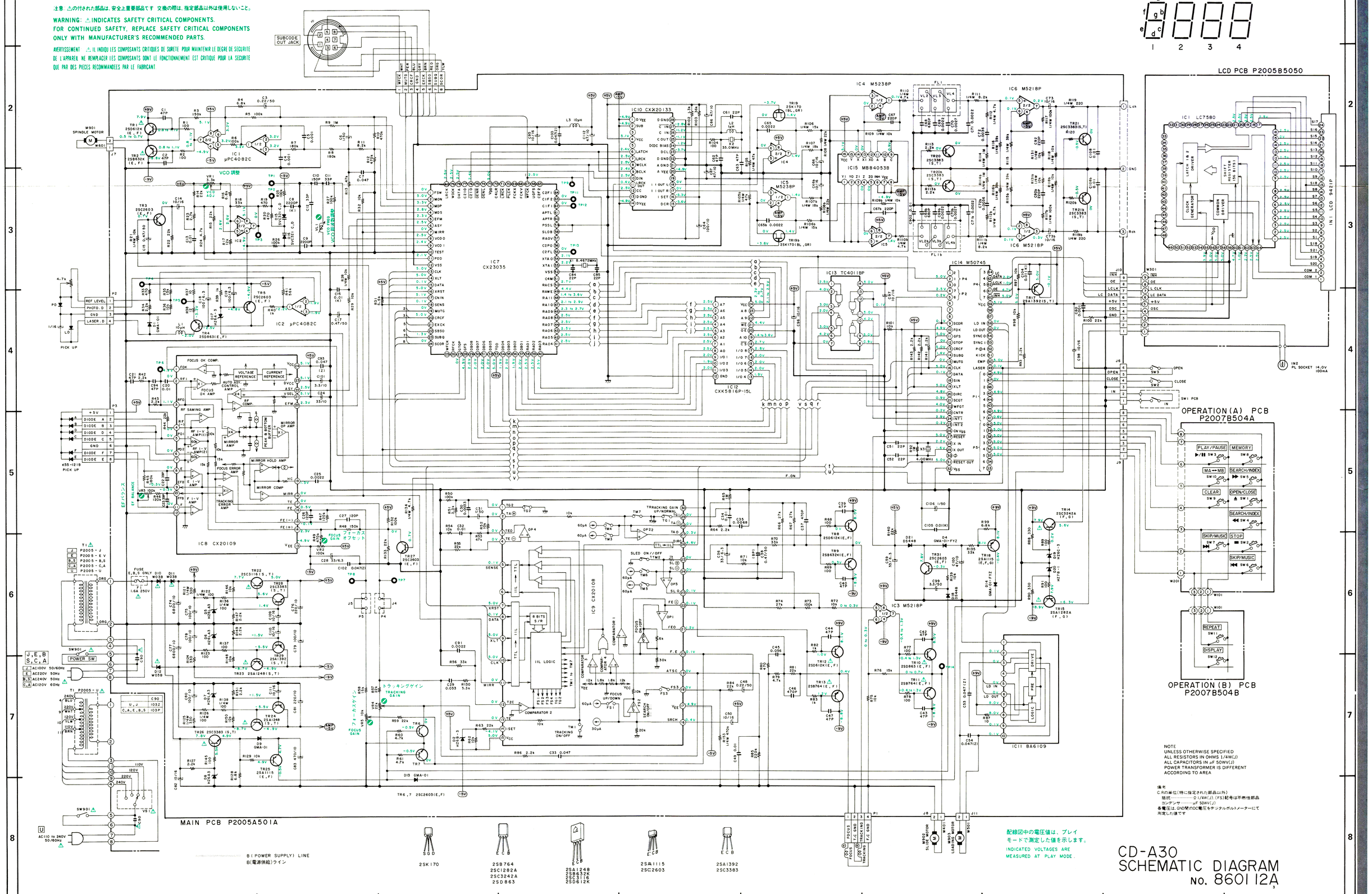

NOTE
UNLESS OTHERWISE SPECIFIED
ALL RESISTORS IN OHMS 1/4W(J)
ALL CAPACITORS IN μF 50WV(J)
POWER TRANSFORMER IS DIFFERENT ACCORDING TO AREA

備考
C,Rの単位(特に指定された部品以外)
抵抗……Ω 1/4W(J).(FS)記号は不燃性部品
コンデンサ……μF 50WV(J)
各電圧は、GND間のDC電圧をデジタルボルトメーターにて測定した値です

配線図中の電圧値は、プレイモードで測定した値を示します。
INDICATED VOLTAGES ARE MEASURED AT PLAY MODE.

CD-A30 SCHEMATIC DIAGRAM
No. 8601 12A

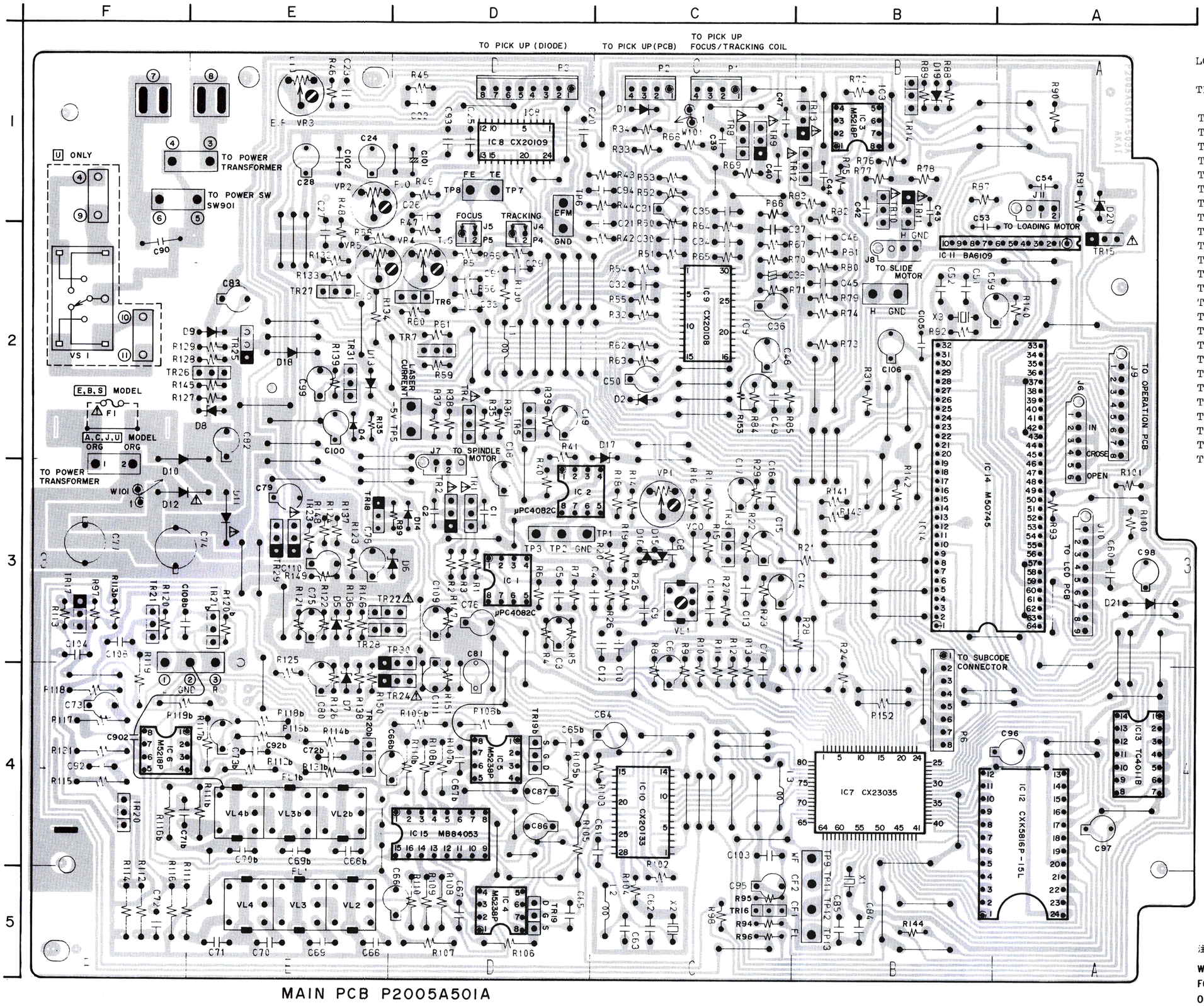

MAIN PCB P2005A501A

LOCATION OF COMPONENTS

TR'S

TR1.....D3
TR2.....D3
TR3.....C3
TR4 to 7.....D2
TR8.....C1
TR9.....C1
TR10 to 14....B1
TR15.....A1
TR16.....C5
TR17.....F3
TR18.....E3
TR19.....D5
TR19b.....D4
TR20.....F4
TR20b.....E4
TR21.....F3
TR21b.....E3
TR22.....D,E3
TR23.....E3
TR24.....D,E4
TR25 to 27....E2
TR28.....D,E3
TR29.....E3
TR30.....D,E4
TR31.....E2

CONNECTOR'S

P1,2.....C1
P3.....D1
P6.....B4
J6.....A2
J7.....D3
J8.....B1
J9.....A2
J10.....A3
J11.....A1

IC'S

IC1,2.....D3
IC3.....B1
IC4.....D5
IC5.....D4
IC6.....F4
IC7.....B4
IC8.....D1
IC9.....C2
IC10.....C4
IC11.....AB1
IC12,13....A4
IC14.....AB3
IC15.....D4

TR1,8,12.....2SD612K (E,F)
TR2,9.....2SB632K (E,F)
TR3,5,6,7,16,27,31.....2SC2603 (E,F)
TR4,10.....2SD863 (E,F)
TR11,13.....2SB764 (E,F)
TR14.....2SC3242A (F,G)
TR15.....2SA1282A (F,G)
TR17,29,30.....2SA1392 (S,T)
TR18,25.....2SA1115 (E,F)
TR19,19b.....2SK170 (BL,GR)
TR20,20b,21,21b,26,28....2SC3383 (S,T)
TR22.....2SC3116 (S,T)
TR23,24.....2SA1248 (S,T)

注意：⚠の付された部品は、安全上重要部品です。交換の際は、指定部品以外は使用しないこと。

WARNING: ⚠ INDICATES SAFETY CRITICAL COMPONENTS.
FOR CONTINUED SAFETY, REPLACE SAFETY CRITICAL COMPONENTS ONLY WITH MANUFACTURER'S RECOMMENDED PARTS.

AVERTISSEMENT: ⚠ IL INDIQU LES COMPOSANTS CRITIQUES DE SURETE. POUR MAINTENIR LE DEGRE DE SECURITE DE L'APPAREIL NE REMPLACER LES COMPOSANTS DONT LE FONCTIONNEMENT EST CRITIQUE POUR LA SECURITE QUE PAR DES PIECES RECOMMANDEES PAR LE FABRICANT.

調整ボリューム及びコイル

VR1：VCO(電圧制御オシレイター)
VR2：フォーカスオフセット
VR3：EFバランス(トラッキングエラー)
VR4：トラッキングゲイン
VR5：フォーカスゲイン
VL1：VCO周波数

ADJUSTMENT VOLUMES & COIL

VR 1 : VCO (VOLTAGE CONTROLED OSCILLATOR)
VR 2 : FOCUS OFF-SET
VR 3 : EF BALANCE (TRACKING ERROR)
VR 4 : TRACKING GAIN
VR 5 : FOCUS GAIN
VL 1 : VCO FREQUENCY

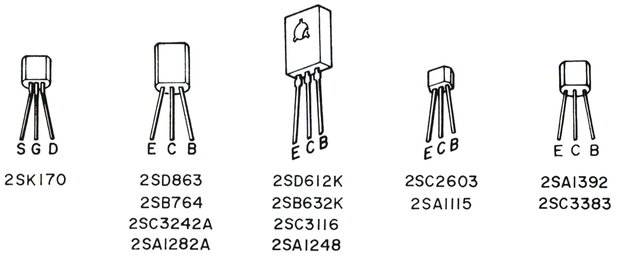

B
= NPN TRANSISTOR

B
= PNP TRANSISTOR

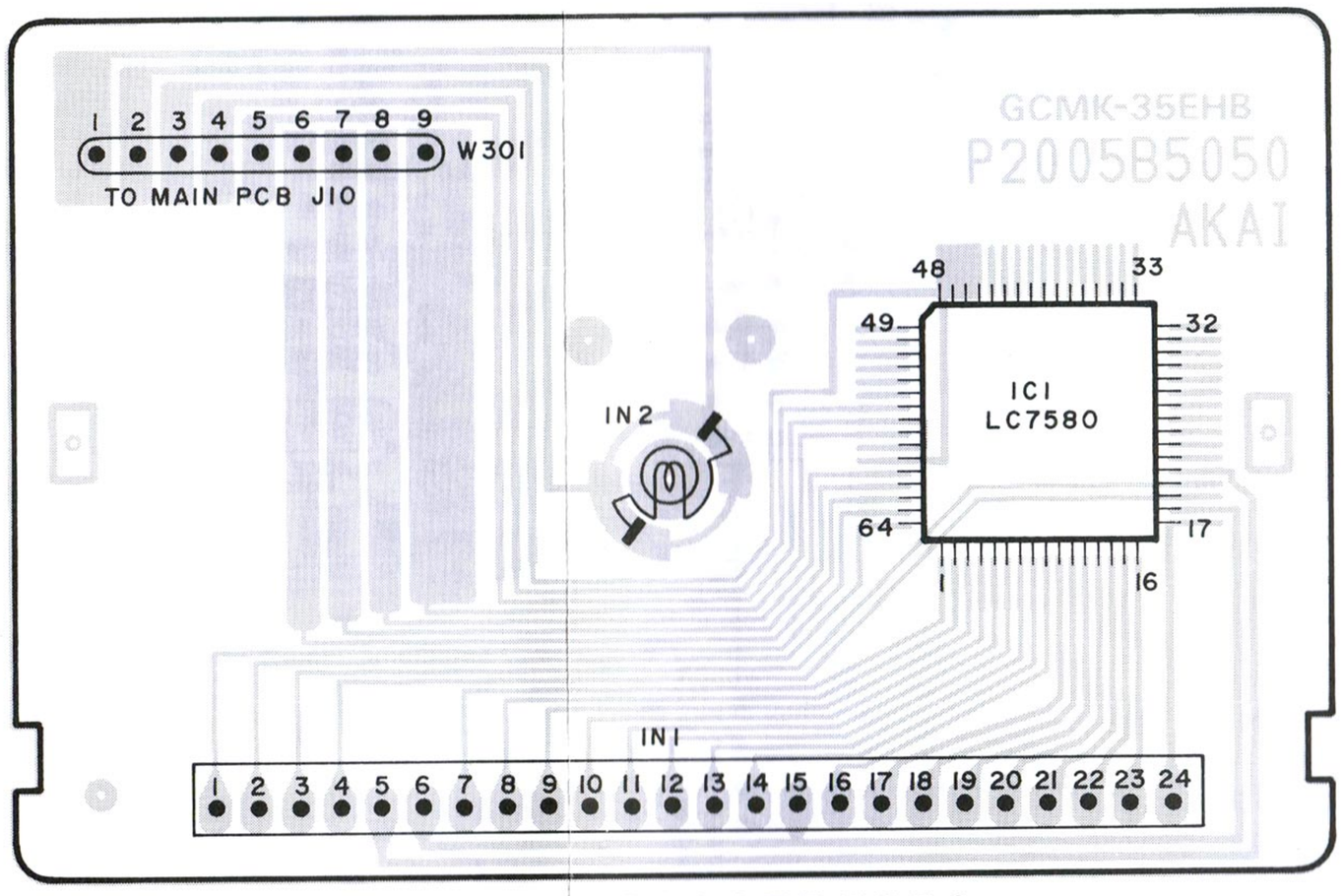

LCD PCB P2005B5050

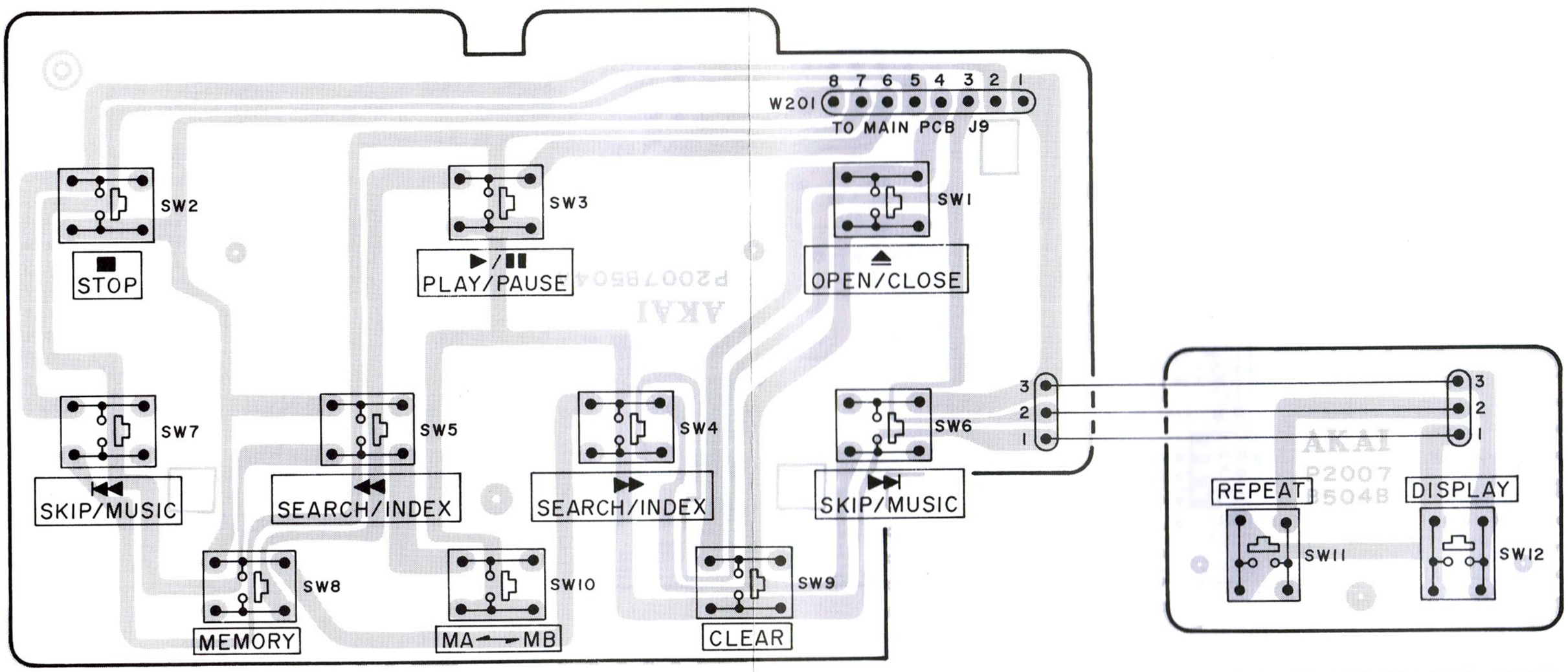

OPERATION(A) PCB P2007B504A

OPERATION(B) PCB
P2007B504B