ALLIED RADIO CORP.

MODEL KNIGHT E-9831
10 Tube Super
'32-'33

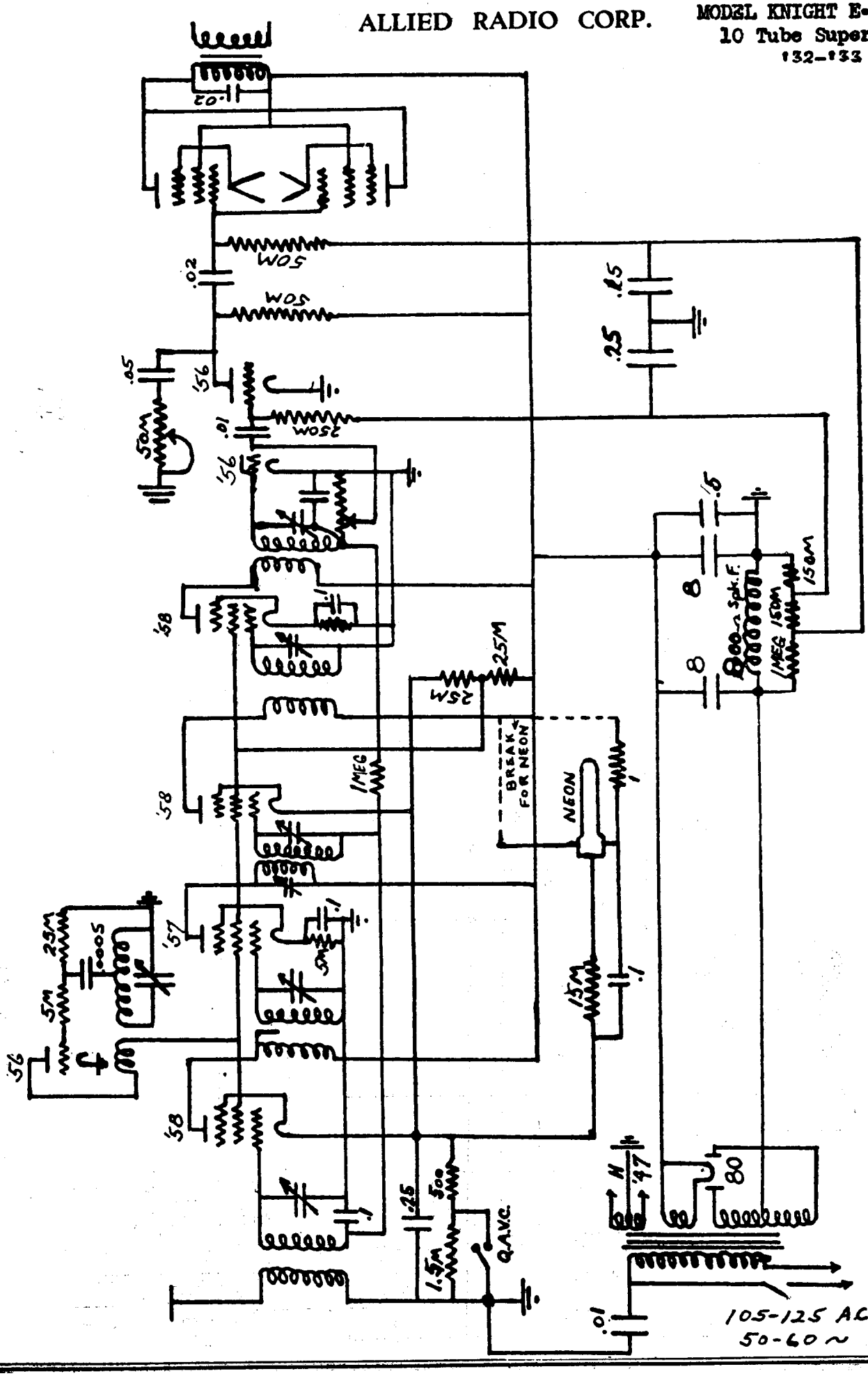

IF PEAK 177.5 KC

Courtesy Nostalgia Air