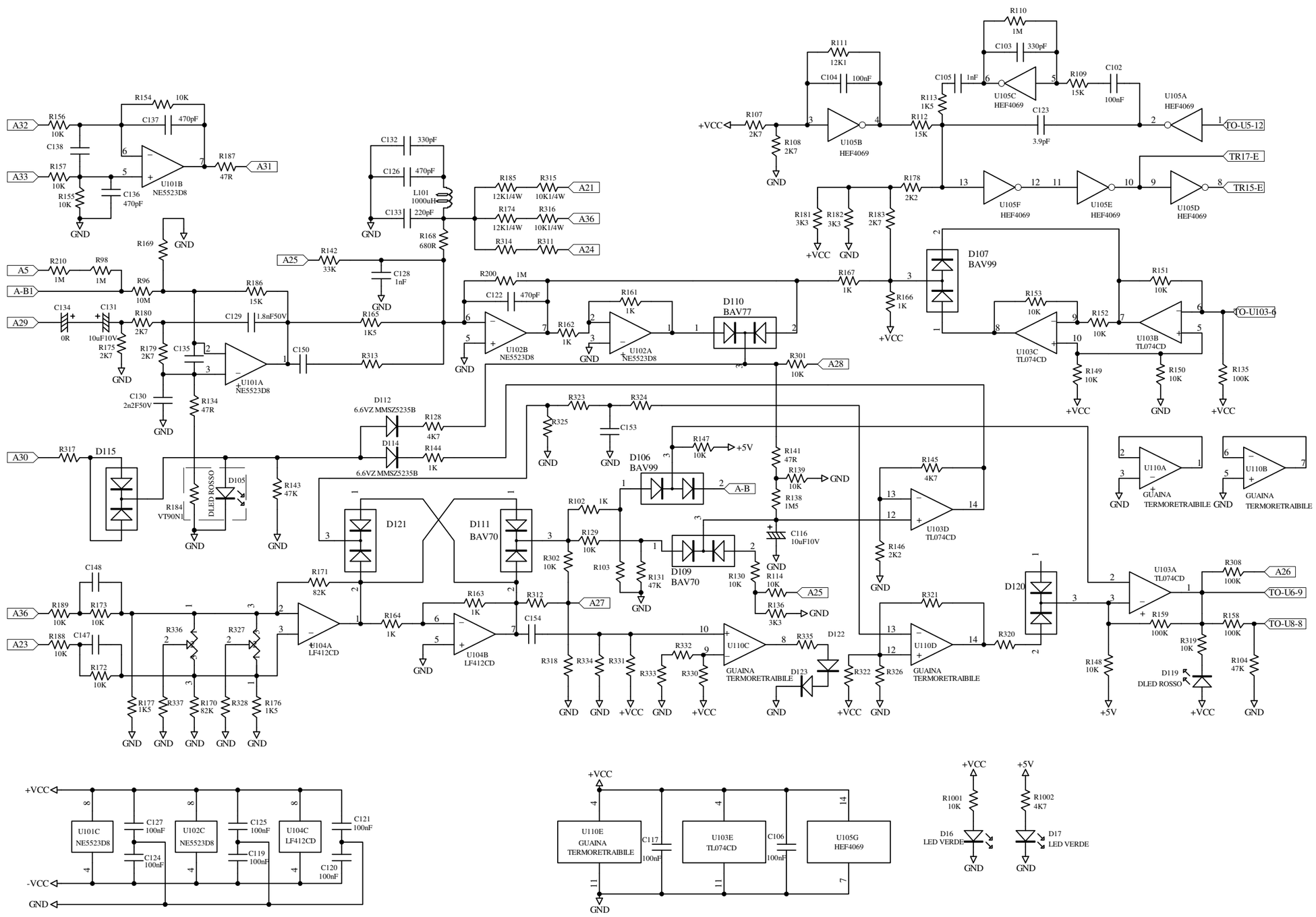
A32
R156 10K
R154 10K
C137 470pF
C138
A33
R157 10K
R155 10K
C136 470pF
U101B NE5523D8
R187 47R
A31
GND
R169
A5
R210 1M
R98 1M
A-B1
R96 10M
A29
C134 0R
C131 10uF10V
R180 2K7
R175 2K7
R179 2K7
C135
R186 15K
C129 1.8nF50V
U101A NE5523D8
C150
R313
C130 2n2F50V
R134 47R
A25
R142 33K
C128 1nF
C132 330pF
C126 470pF
L101 1000uH
C133 220pF
R168 680R
R185 12K1/4W
R315 10K1/4W
A21
R174 12K1/4W
R316 10K1/4W
A36
R314
R311
A24
R200 1M
C122 470pF
R165 1K5
U102B NE5523D8
R161 1K
R162 1K
U102A NE5523D8
D110 BAV77
R301 10K
A28
R167 1K
R166 1K
+VCC
D107 BAV99
R110 1M
R111 12K1
C104 100nF
C103 330pF
C105 1nF
R107 2K7
R108 2K7
U105B HEF4069
R113 1K5
U105C HEF4069
R109 15K
C102 100nF
R112 15K
C123 3.9pF
U105A HEF4069
TO-U5-12
TR17-E
TR15-E
R178 2K2
U105F HEF4069
U105E HEF4069
U105D HEF4069
R181 3K3
R182 3K3
R183 2K7
R151 10K
R153 10K
R152 10K
U103C TL074CD
U103B TL074CD
TO-U103-6
R149 10K
R150 10K
R135 100K
D112 6.6VZ MMSZ5235B
R128 4K7
D114 6.6VZ MMSZ5235B
R144 1K
R323
R324
R325
C153
R147 10K
+5V
D106 BAV99
A-B
R141 47R
R139 10K
R138 1M5
C116 10uF10V
R145 4K7
U103D TL074CD
R146 2K2
U110A
U110B
GUAINA TERMORETRAIBILE
A30
R317
D115
R184 VT90N1
D105 DLED ROSSO
R143 47K
D121
D111 BAV70
R102 1K
R129 10K
R302 10K
R103
R131 47K
D109 BAV70
R130 10K
R114 10K
A25
R136 3K3
R171 82K
R163 1K
R312
A27
R164 1K
U104B LF412CD
C154
U110C
D122
D123
R321
U110D
R320
D120
U103A TL074CD
R308 100K
A26
TO-U6-9
R159 100K
R158 100K
TO-U8-8
R319 10K
R148 10K
R104 47K
D119 DLED ROSSO
C148
R189 10K
R173 10K
A36
A23
R188 10K
C147
R172 10K
U104A LF412CD
R336
R327
R177 1K5
R337
R170 82K
R328
R176 1K5
R318
R334
R331
R333
R332
R330
R322
R326
U101C NE5523D8
C127 100nF
C124 100nF
U102C NE5523D8
C125 100nF
C119 100nF
U104C LF412CD
C121 100nF
C120 100nF
-VCC
U110E GUAINA TERMORETRAIBILE
C117 100nF
U103E TL074CD
C106 100nF
U105G HEF4069
R1001 10K
D16 LED VERDE
R1002 4K7
D17 LED VERDE