Service Manual

MODEL: MS153A 154A

www.altoproaudio.com

Version 1.1

CONTENT

1.Introduction.....1

2.Specification.....2

3.Block Diagram.....3

4.Schematic Diagram.....6

5.Wiring Diagram.....11

6.PCB Layout.....16

7.Exploded View & Mechanical Parts List.....18

8.BOM.....23

1. INTRODUCTION

Thank you very much for expressing your confidence in ▲LTO products by purchasing MS series powered speaker system. The MS series cabinets are specifically designed for using in hi-quality performance site and the precise sound commercial place. It includes five full range cabinets (MS12A, MS15A, MS152A, MS153A, and MS154A).This series uses trapezium configuration which greatly decreases the resonance of the standing wave in the cabinet. These cabinets uses hi-density matrix spray-paint technics and the bottom bracket design which make mounting quickly and Flexibly. HF compression driver and vented LF for fully professional performance.

The MS powered speaker cabinets include some exclusive innovations such as switch mode power supply and digital power circuitry (in selected modes) that make them the lightest powered cabinets of this kind ever made.
The MS full range models include another Alto innovation: The MODELLER. Thanks to this circuitry user can select 16 different tastes and applications. The Alto Modeller offers sound presets especially thought for application with or without subwoofer, for voice optimised application, for Disco Music, for jazz, for Rock & Roll among others. Although the operation of MS series speaker system is very simple, to obtain the optimal effects please read this manual carefully before operation.

2. FEATURES

The excellent quality MS series -powered speaker cabinets will provide the following features:

- Trapezium configuration decreases the resonance of the standing wave in the cabinet
- The cabinets using hi-density matrix spray-paint technics
- The bottom bracket design makes mounting quickly and flexibly
- HF compression driver and vented LF for fully professional performance
- With modeller include have 16 "sound mode " which are suitable for different tastes and applications
- Switch mode power supply and digital power circuitry

6. TECHNICAL SPECIFICATION

Model Item	MS12A	MS15A
Active System Type	2-Way Bi-Amp. with MODELLER	2-way Bi-Amp. with MODELLER
Low Output Power	350 Watt EIAJ	350Watt EIAJ
High Output Power	65Watt EIAJ	65Watt EIAJ
Max SPL 1mt	122dB SPL calculated EIAJ	123dB SPL Calculated EIAJ
Frequency Response	MODELLER Presets Setting	MODELLER Presets Setting
Protection Low - High	Analog Limiter	Analog Limiter
Input Impedance	30kΩ Balanced / 15kΩ Unbalanced	30kΩ Balanced / 15kΩ Unbalanced
Input Sensitivity	Line +4dB	Line +4dB
Low Frequency Device	12" woofer / 2" Voice Coil	15" woofer / 2.5" Voice Coil
High Frequency Device	1" Neodymium Driver / 1" Voice Coil	1" Neodymium Driver / 1" Voice Coil
Coverage(H° x V°)	90° H x 60° V Elliptical Wave Guide	90° H x 60° V Elliptical Wave Guide
Connectors	Input with Combo / Link with XLR	Input with Combo / Link with XLR
Cabinet	Trapezoidal Shape / Composite Wood / Metal Handle / Black Paint Finishing	
External Control	MODELLER with 16 Preset / Line Volume/ Clipping LED Indicator / Ground Switch	
Dimensions(H x W x D)	650 x 400 x 365 (mm)	750 x 450 x 420 (mm)
Net Weight (lbs/kg)	48.50lbs/22kg	59.52lbs/27kg

Model Item	MS152A
Active System Type	2-way Bi-Amp. with MODELLER
Low Output Power	350Watt EIAJ
High Output Power	65Watt EIAJ
Max SPL 1mt	126dB SPL Calculated EIAJ
Frequency Response	MODELLER Presets Setting
Protection Low - High	Analog Limiter
Input Impedance	30kΩ Balanced / 15kΩ Unbalanced
Input Sensitivity	Line +4dB
Low Frequency Device	2 x 15" Woofer / 2.5" Voice Coil
High Frequency Device	1" Driver / 1.35" Voice Coil
Coverage(H° x V°)	90° H x 60° V Elliptical Wave Guide
Connectors	Input with Combo / Link with XLR
Cabinet	Trapezoidal Shape / Multi-layer Plywood/ Metal Handle / Black Paint finishing
External Control	MODELLER with 16 Preset / Line Volume/ Clipping LED Indicator / Ground Switch
Dimensions H x W x D	1100 x 450 x 443 (mm)
Net Weight (lbs/kg)	83.29lbs/37.78kg

MS1543A/MS154A BLOCK SCH(1/1)

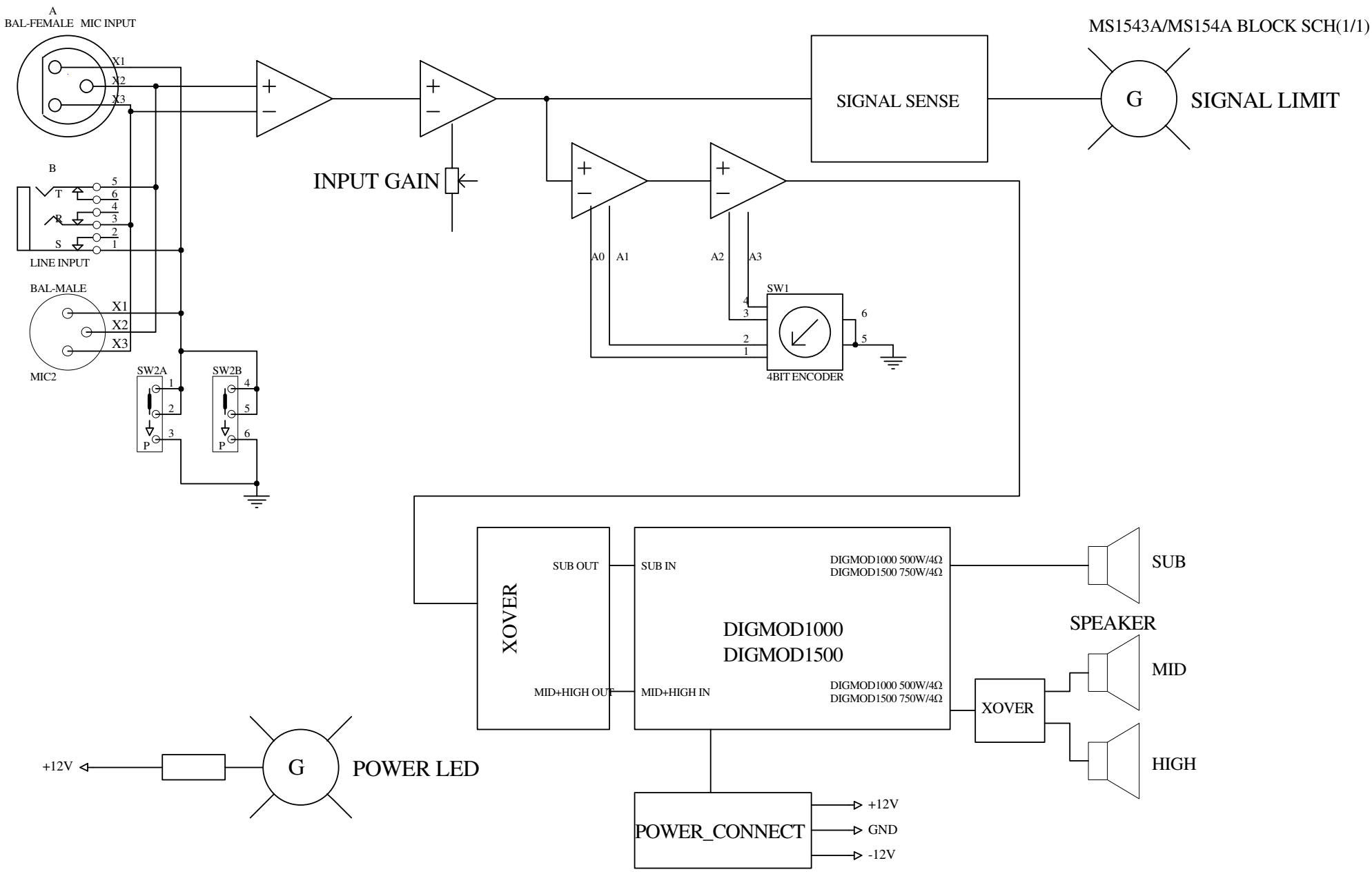

MS153A BLOCK DIAGRAM

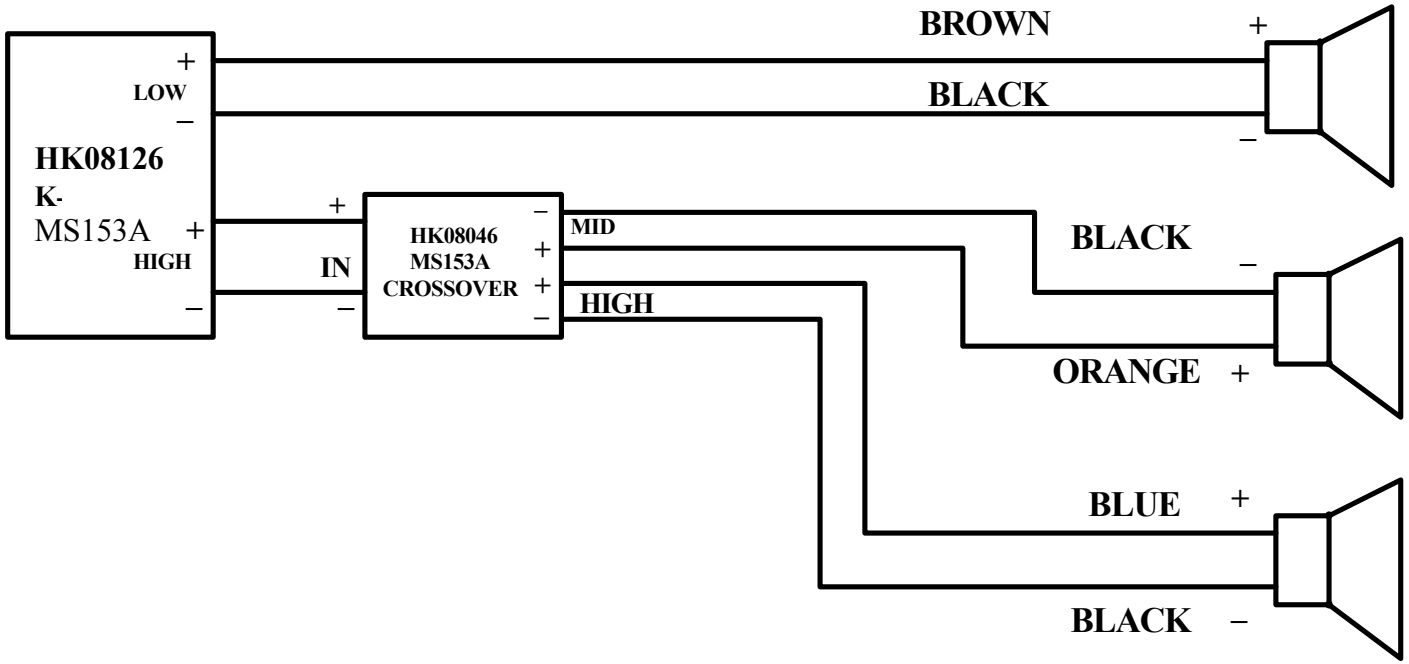

MS154A BLOCK DIAGRAM

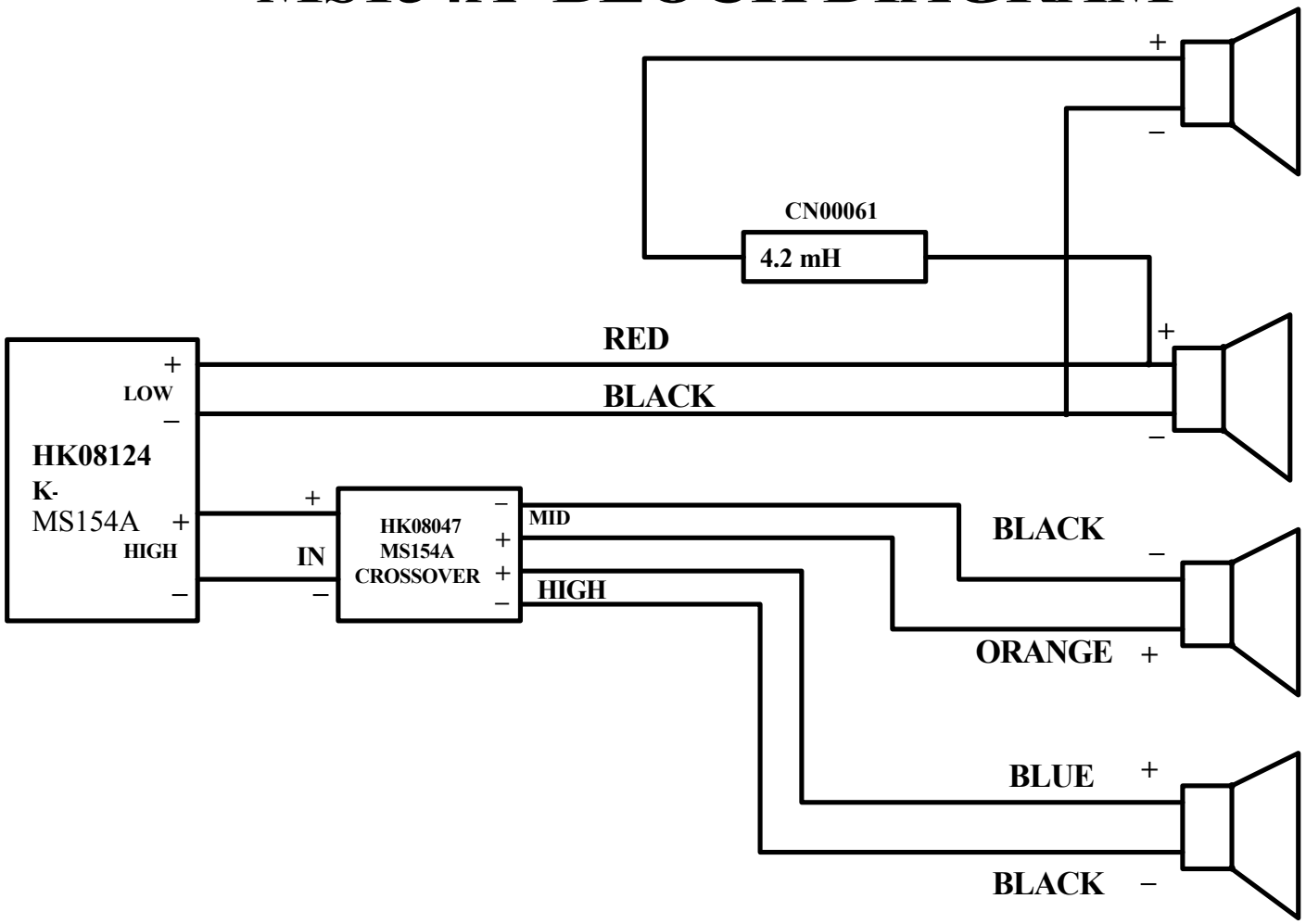

MS153A/MS154A-PRE(1/3)

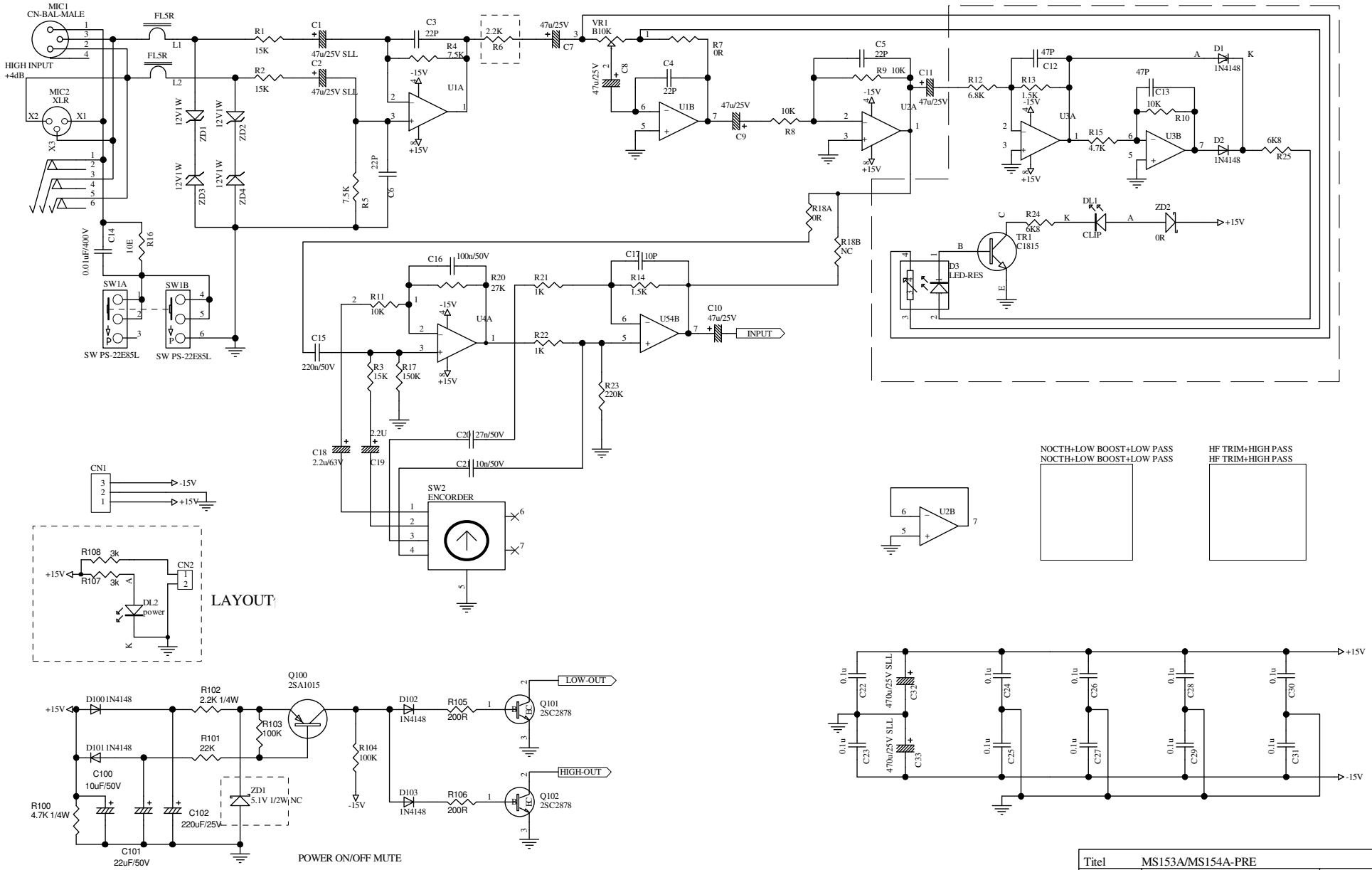

Titel	MS153A/MS154A-PRE		
Size A3	Model NO: MS153A/MS154A		Revision VER070201
Date	3-Mar-2007	Sheet 1	of 3
File	MS153A MS154A-PRE.sch	Drawn By	XiaoPingHuang

04_1

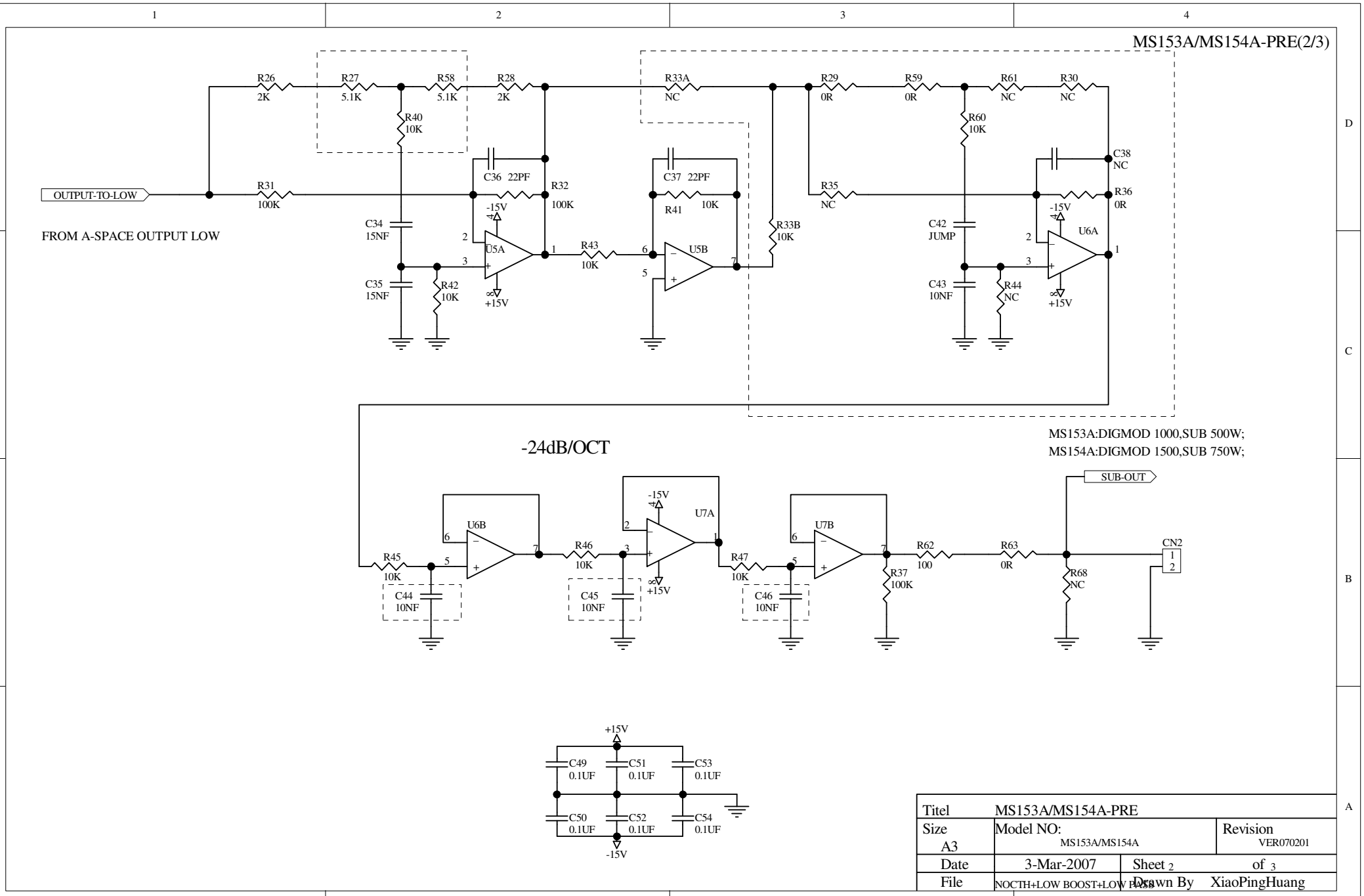
MS153A/MS154A-PRE(2/3)
OUTPUT-TO-LOW
FROM A-SPACE OUTPUT LOW
R26 2K
R27 5.1K
R58 5.1K
R28 2K
R40 10K
R31 100K
C36 22PF
R32 100K
C34 15NF
C35 15NF
R42 10K
U5A
-15V
+15V
R43 10K
C37 22PF
R41 10K
U5B
R33A NC
R33B 10K
R29 0R
R59 0R
R61 NC
R30 NC
R60 10K
R35 NC
C38 NC
R36 0R
C42 JUMP
C43 10NF
R44 NC
U6A
-24dB/OCT
MS153A:DIGMOD 1000,SUB 500W;
MS154A:DIGMOD 1500,SUB 750W;
SUB-OUT
U6B
U7A
U7B
R45 10K
C44 10NF
R46 10K
C45 10NF
R47 10K
C46 10NF
R37 100K
R62 100
R63 0R
R68 NC
CN2
+15V
C49 0.1UF
C51 0.1UF
C53 0.1UF
C50 0.1UF
C52 0.1UF
C54 0.1UF
-15V
Titel MS153A/MS154A-PRE
Size A3
Model NO: MS153A/MS154A
Revision VER070201
Date 3-Mar-2007
Sheet 2 of 3
File NOCTH+LOW BOOST+LOW PASS
Drawn By XiaoPingHuang

MS153A/MS154A-PRE(3/3)

HF TRIM+HIGH PASS

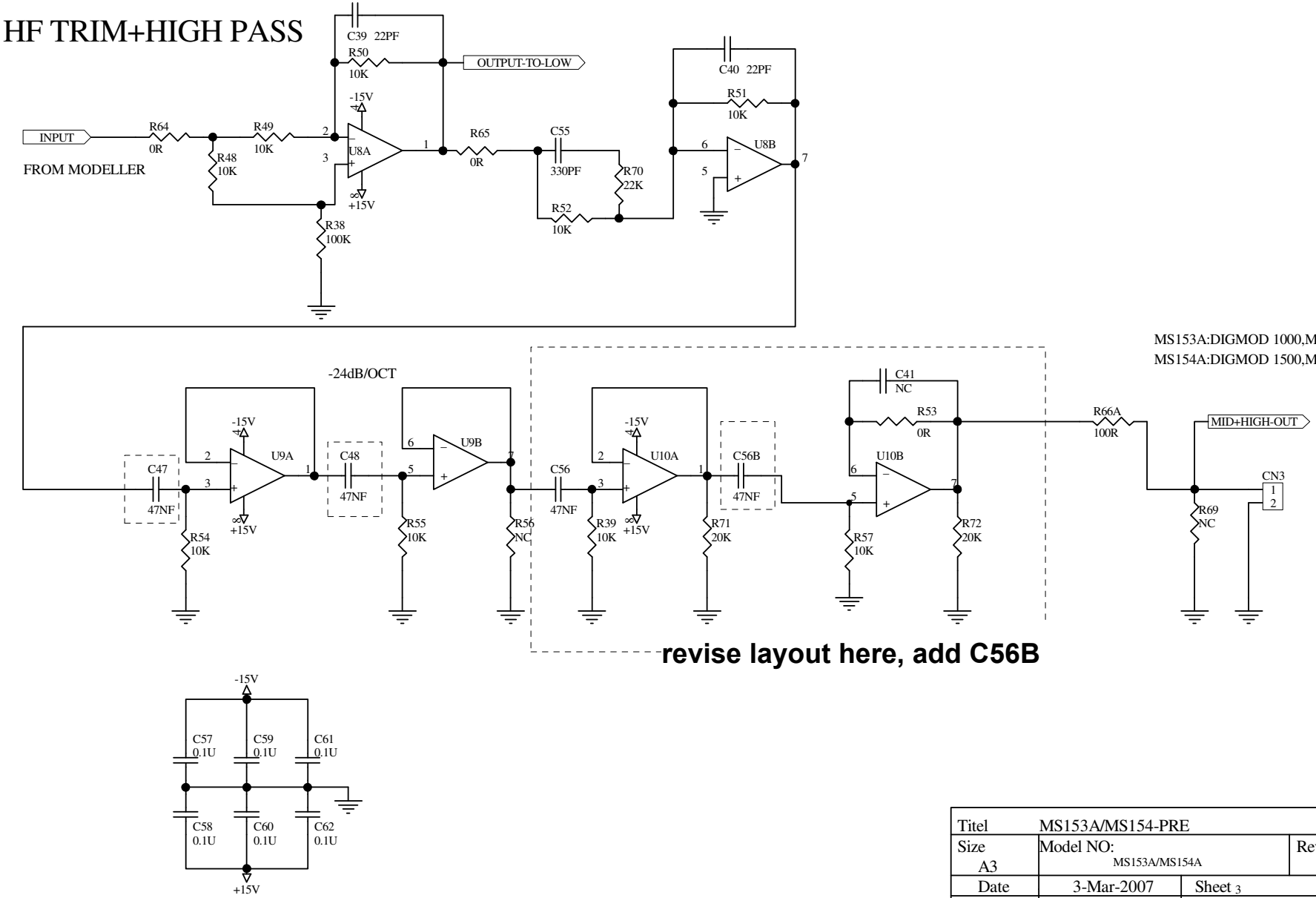

Titel	MS153A/MS154-PRE		
Size A3	Model NO: MS153A/MS154A		Revision VER070201
Date	3-Mar-2007	Sheet 3	of 3
File	HF TRIM+HIGH PASS	Drawn By	XiaoPingHuang

MS153A/MS154A_VER061214 1/1

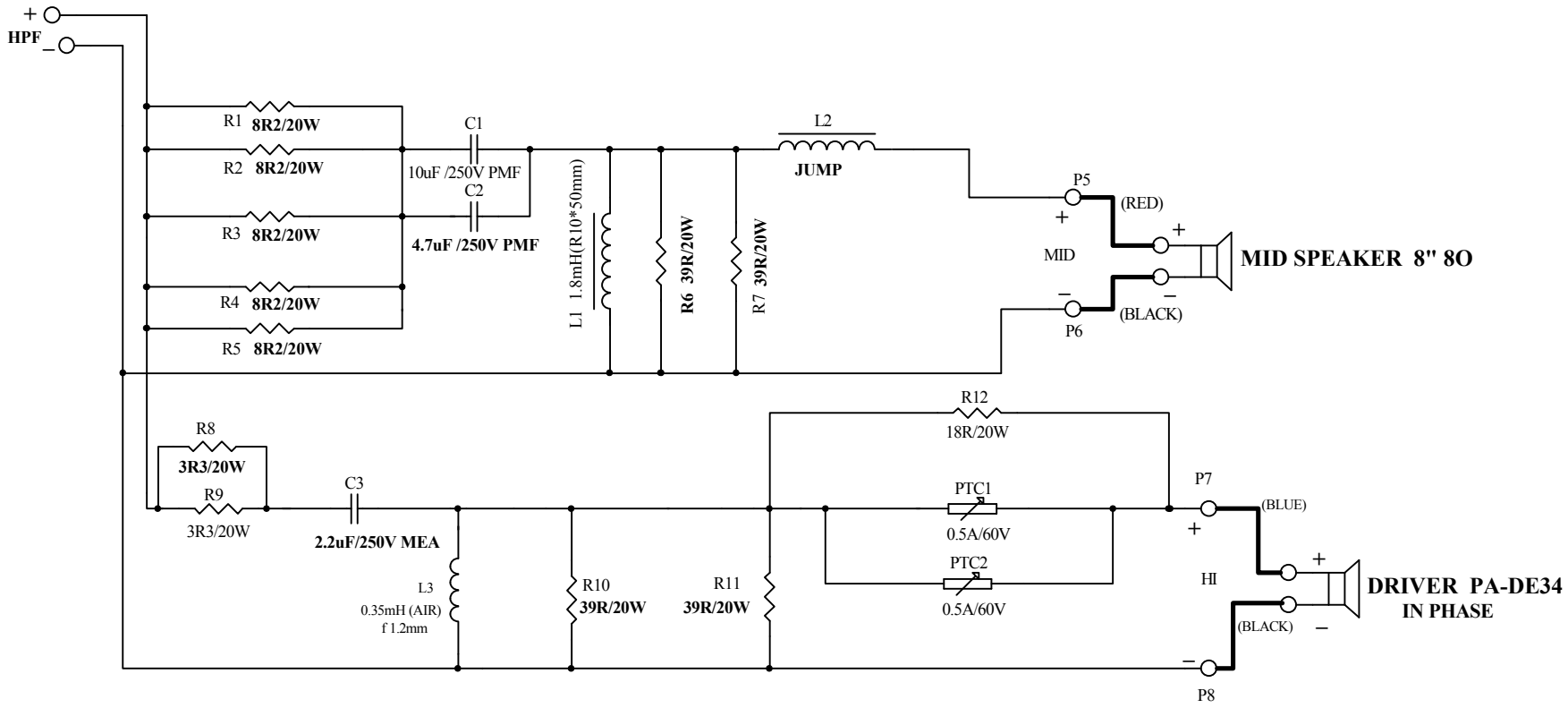

Titel	MS153A/MS154A_VER061214		
Size A3	Model No: MS153A_V1.0		Revision VER061215
Date: 15-DEC-2006		1 of 1	
File: MS153A.Sch		Drawn By: KAIMINGLIU	

MS153A/MS154A_VER061214 1/1

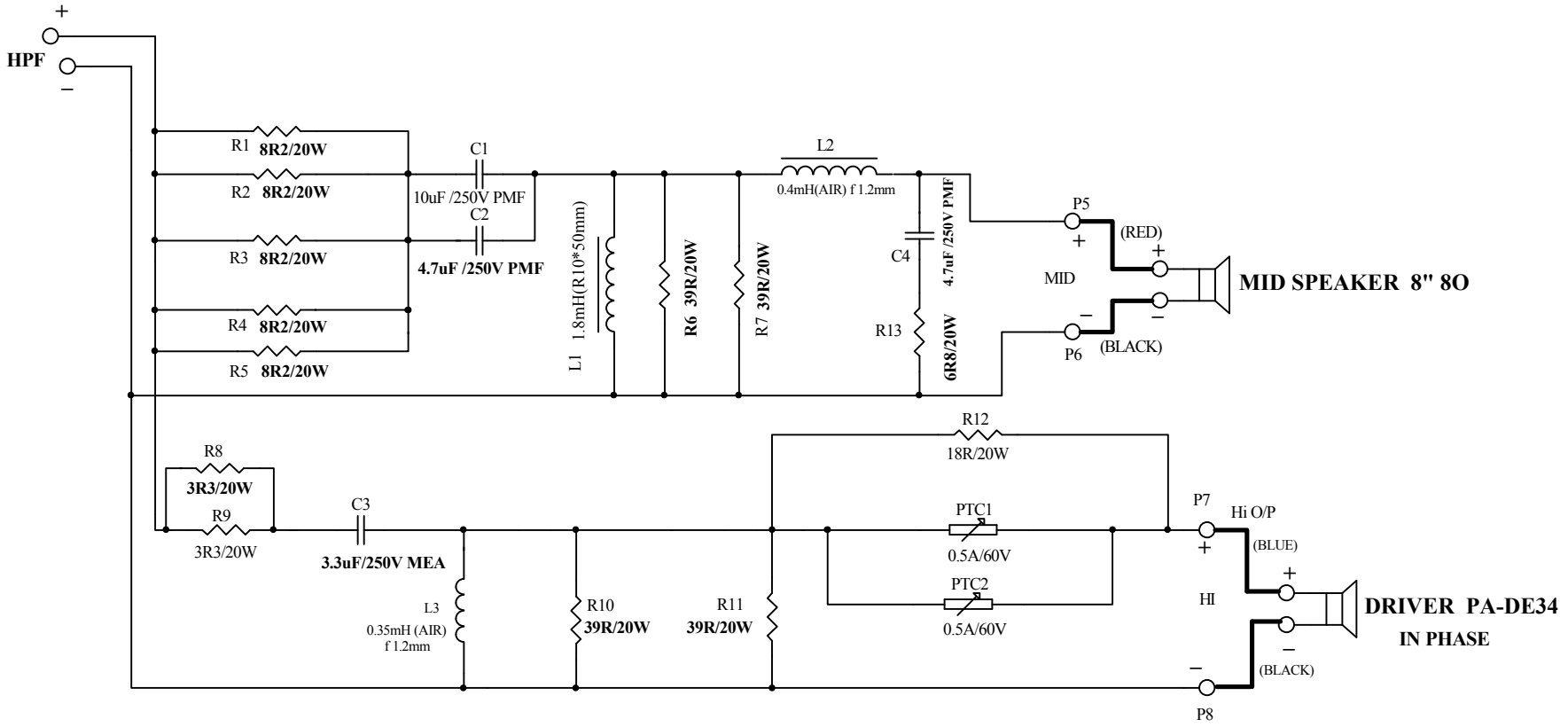

Titel	MS153A/MS154A_VER061214		
Size A3	Model No: MS154A_V1.0		Revision VER061215
Date: 15-DEC-2006		1 of 1	
File: MS154A.SCH		Drawn By: KAIMINGLIU	

MS153A MS154A

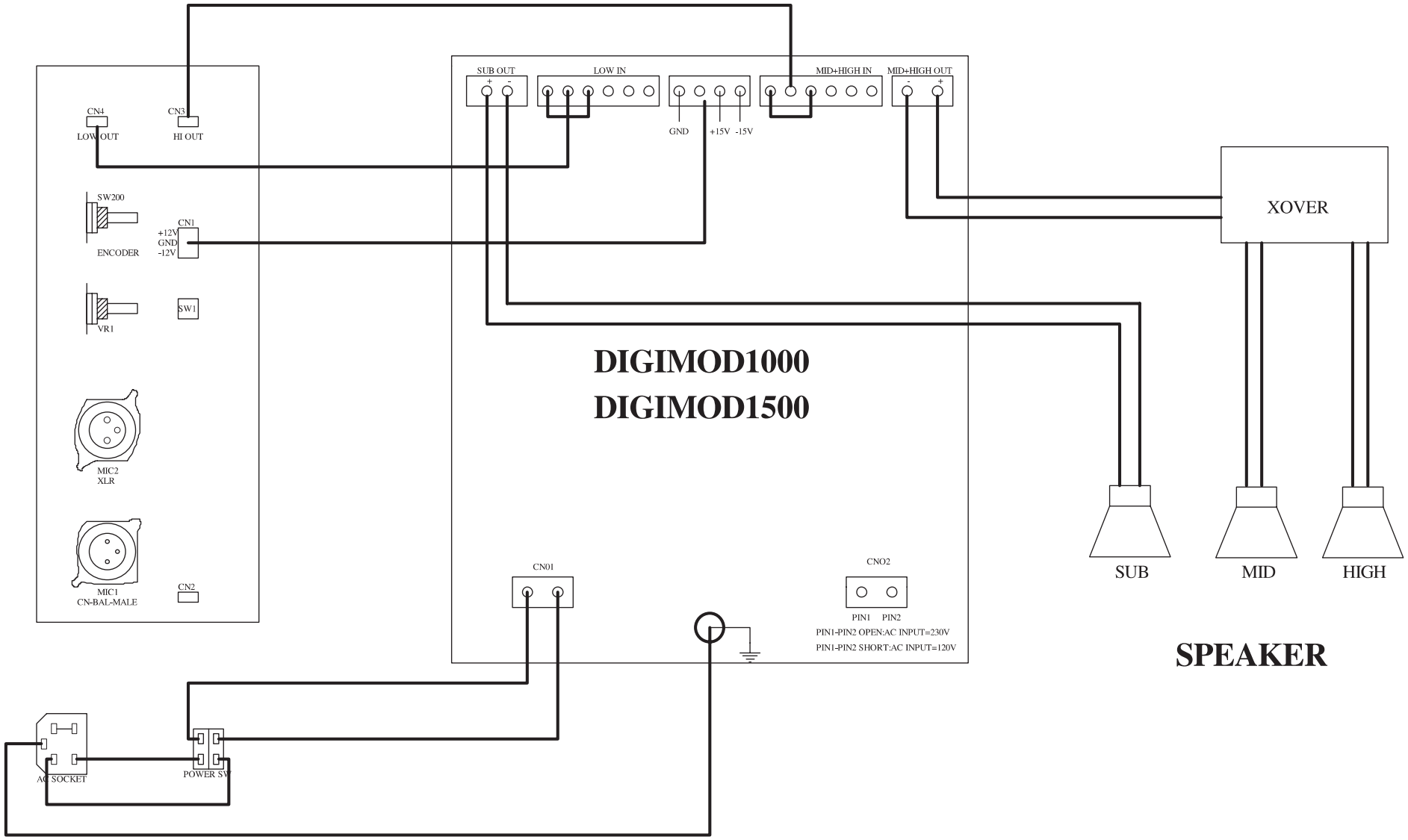

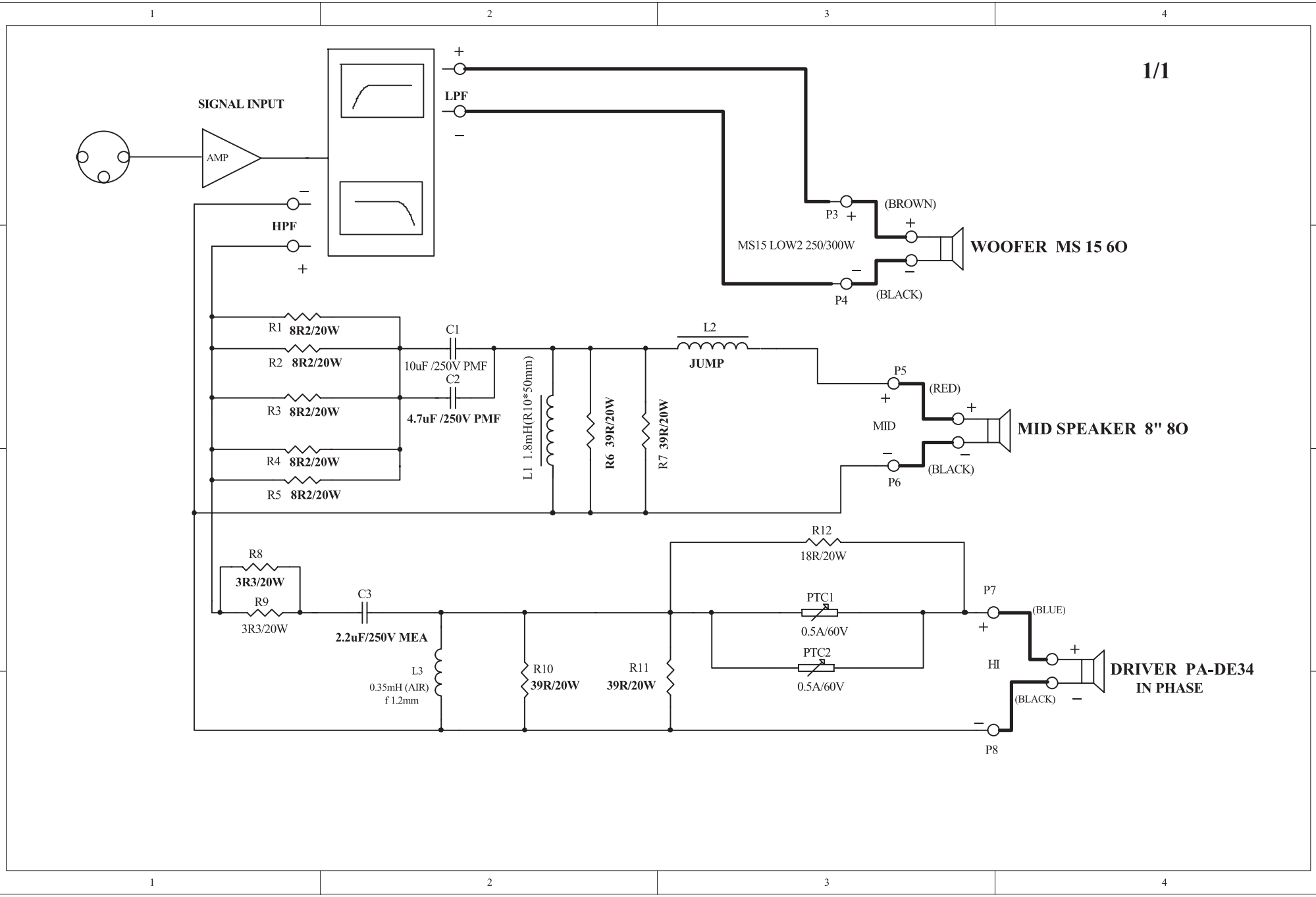
1/1
SIGNAL INPUT
AMP
LPF
HPF
P3
P4
(BROWN)
(BLACK)
MS15 LOW2 250/300W
WOOFER MS 15 6O
R1 8R2/20W
R2 8R2/20W
R3 8R2/20W
R4 8R2/20W
R5 8R2/20W
C1
10uF /250V PMF
C2
4.7uF /250V PMF
L1 1.8mH(R10*50mm)
R6 39R/20W
R7 39R/20W
L2
JUMP
P5
P6
(RED)
(BLACK)
MID
MID SPEAKER 8" 8O
R8
3R3/20W
R9
3R3/20W
C3
2.2uF/250V MEA
L3
0.35mH (AIR)
f 1.2mm
R10
39R/20W
R11
39R/20W
R12
18R/20W
PTC1
0.5A/60V
PTC2
0.5A/60V
P7
P8
(BLUE)
(BLACK)
HI
DRIVER PA-DE34
IN PHASE

MS153A

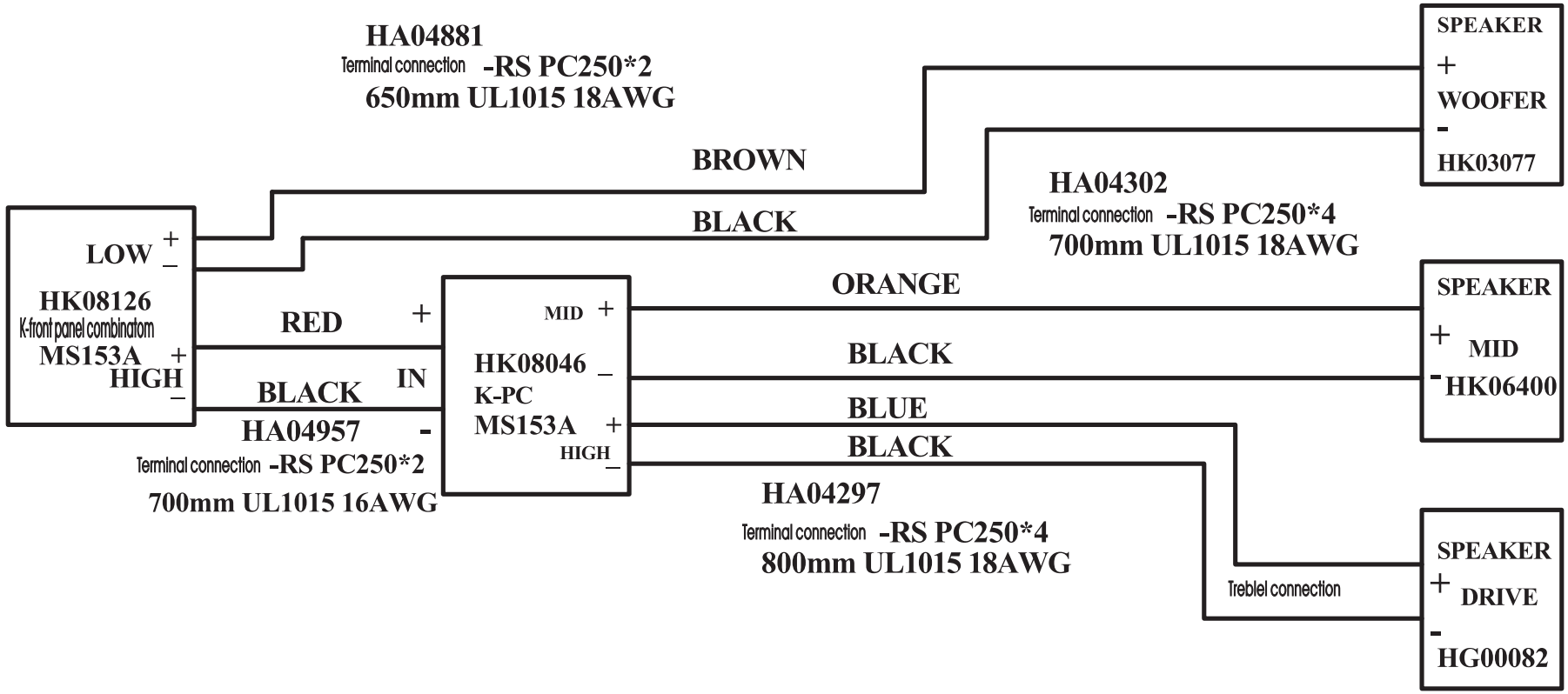
HA04881
Terminal connection -RS PC250*2
650mm UL1015 18AWG
BROWN
BLACK
HA04302
Terminal connection -RS PC250*4
700mm UL1015 18AWG
SPEAKER
+
WOOFER
-
HK03077
LOW +
–
HK08126
K-front panel combinatom
MS153A +
HIGH
–
RED +
BLACK IN
HA04957 -
Terminal connection -RS PC250*2
700mm UL1015 16AWG
MID +
HK08046 –
K-PC
MS153A +
HIGH
–
ORANGE
BLACK
BLUE
BLACK
HA04297
Terminal connection -RS PC250*4
800mm UL1015 18AWG
SPEAKER
+ MID
- HK06400
Treblel connection
SPEAKER
+ DRIVE
-
HG00082

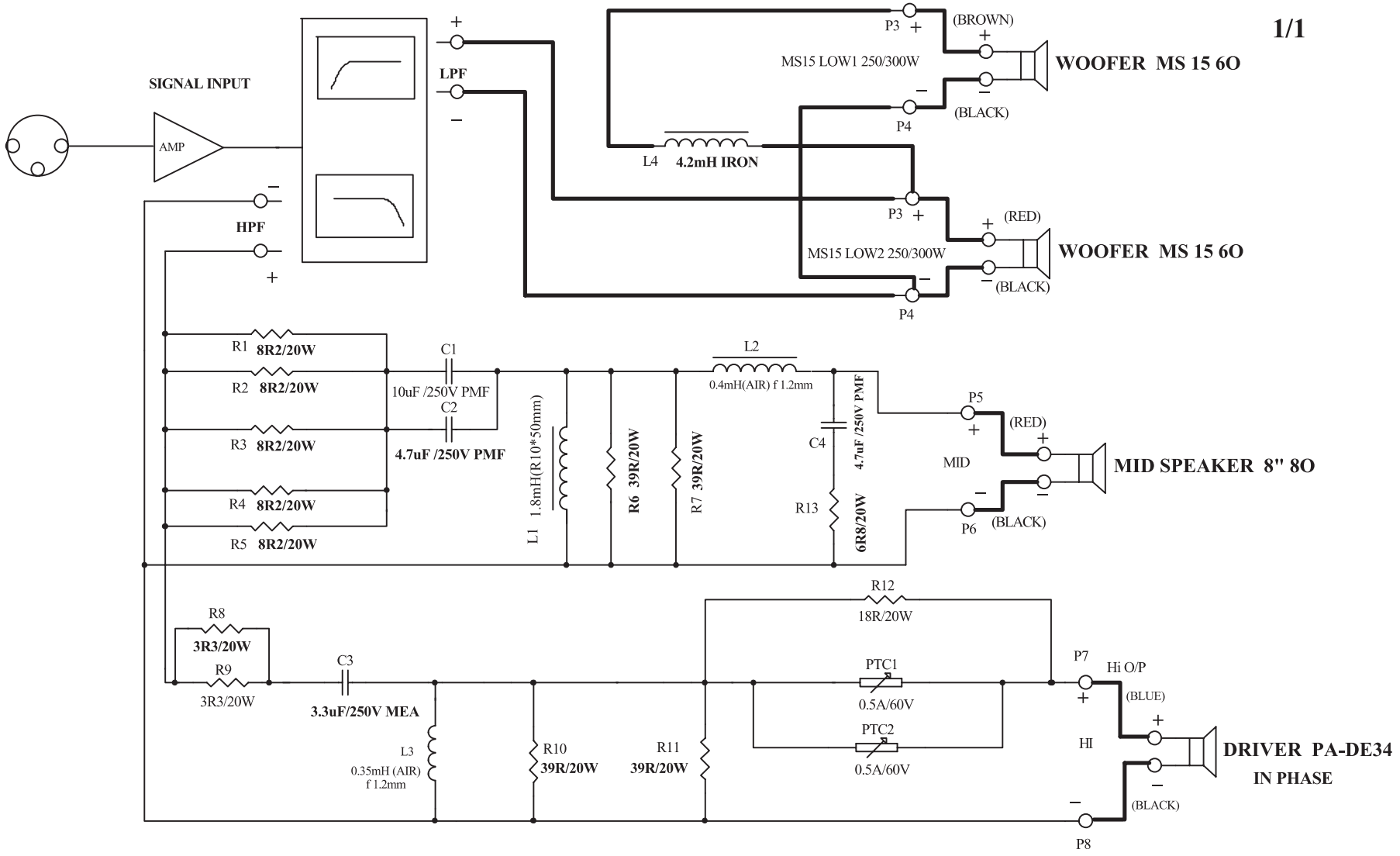
1/1
SIGNAL INPUT
AMP
LPF
HPF
P3
P4
(BROWN)
(BLACK)
MS15 LOW1 250/300W
WOOFER MS 15 6O
L4 4.2mH IRON
(RED)
MS15 LOW2 250/300W
WOOFER MS 15 6O
R1 8R2/20W
R2 8R2/20W
R3 8R2/20W
R4 8R2/20W
R5 8R2/20W
C1
10uF /250V PMF
C2
4.7uF /250V PMF
L1 1.8mH(R10*50mm)
R6 39R/20W
R7 39R/20W
L2
0.4mH(AIR) f 1.2mm
C4
4.7uF /250V PMF
R13
6R8/20W
P5
P6
MID
MID SPEAKER 8" 8O
R8
3R3/20W
R9
3R3/20W
C3
3.3uF/250V MEA
L3
0.35mH (AIR)
f 1.2mm
R10
39R/20W
R11
39R/20W
R12
18R/20W
PTC1
0.5A/60V
PTC2
0.5A/60V
P7
P8
Hi O/P
HI
(BLUE)
(BLACK)
DRIVER PA-DE34
IN PHASE

MS154A

1/1

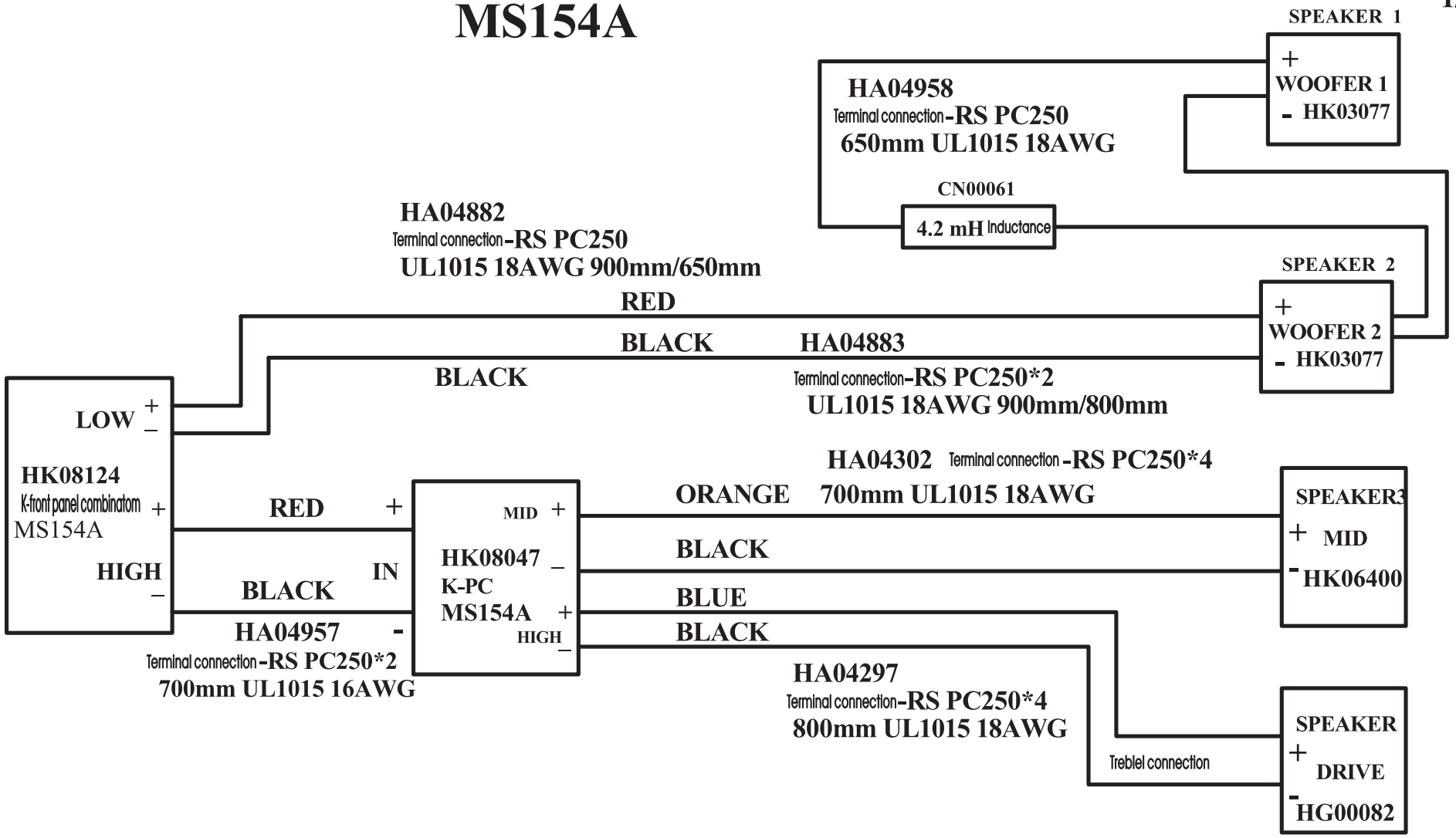
SPEAKER 1
+
WOOFER 1
- HK03077
HA04958
Terminal connection-RS PC250
650mm UL1015 18AWG
CN00061
4.2 mH Inductance
HA04882
Terminal connection-RS PC250
UL1015 18AWG 900mm/650mm
SPEAKER 2
+
WOOFER 2
- HK03077
RED
BLACK
HA04883
BLACK
Terminal connection-RS PC250*2
UL1015 18AWG 900mm/800mm
LOW
+
-
HK08124
K-front panel combinatom
MS154A
HIGH
+
-
HA04302
Terminal connection -RS PC250*4
ORANGE
700mm UL1015 18AWG
RED
+
MID
+
HK08047
K-PC
MS154A
IN
-
+
HIGH
-
BLACK
BLACK
SPEAKER3
+
MID
-
HK06400
BLUE
BLACK
HA04957
-
Terminal connection -RS PC250*2
700mm UL1015 16AWG
HA04297
Terminal connection-RS PC250*4
800mm UL1015 18AWG
Treblel connection
SPEAKER
+
DRIVE
-
HG00082

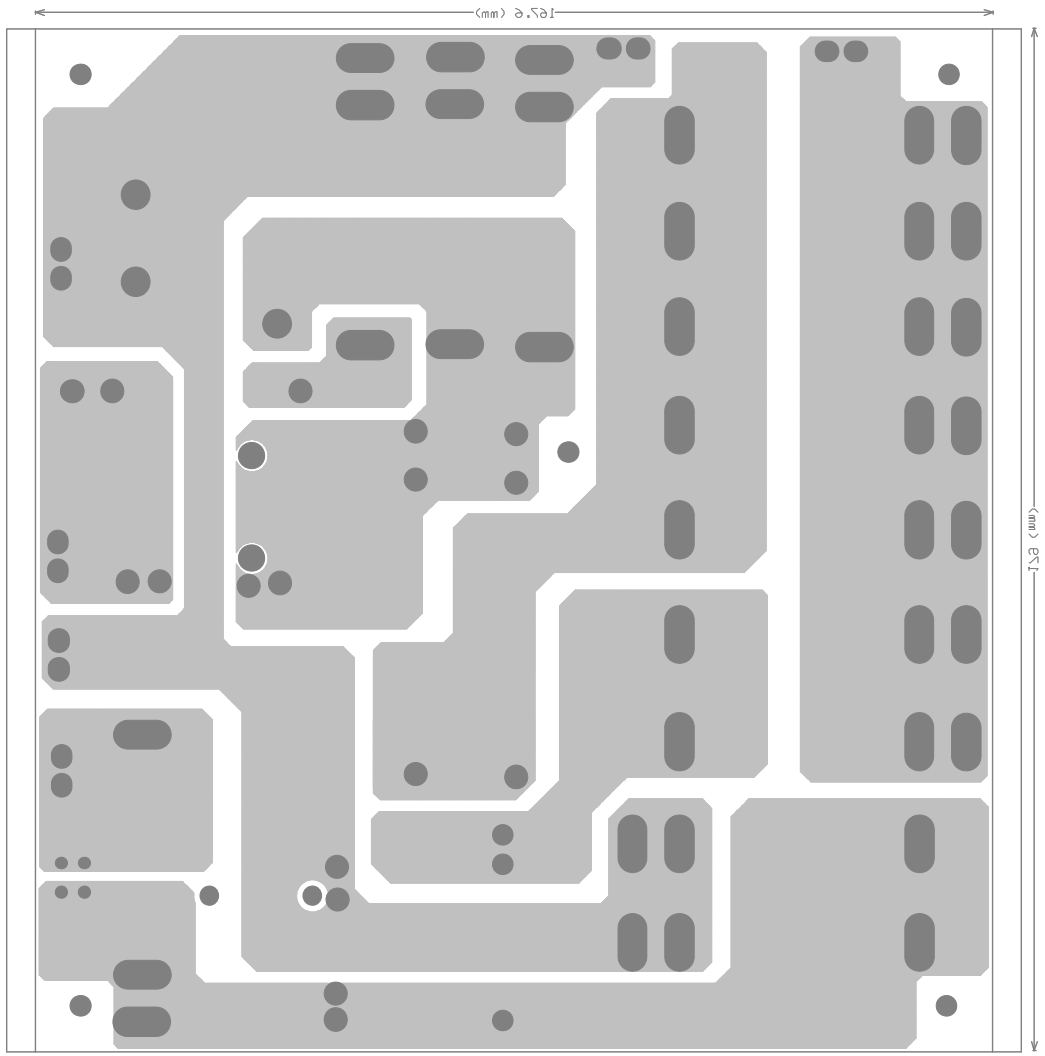
167.6 (mm)
179 (mm)

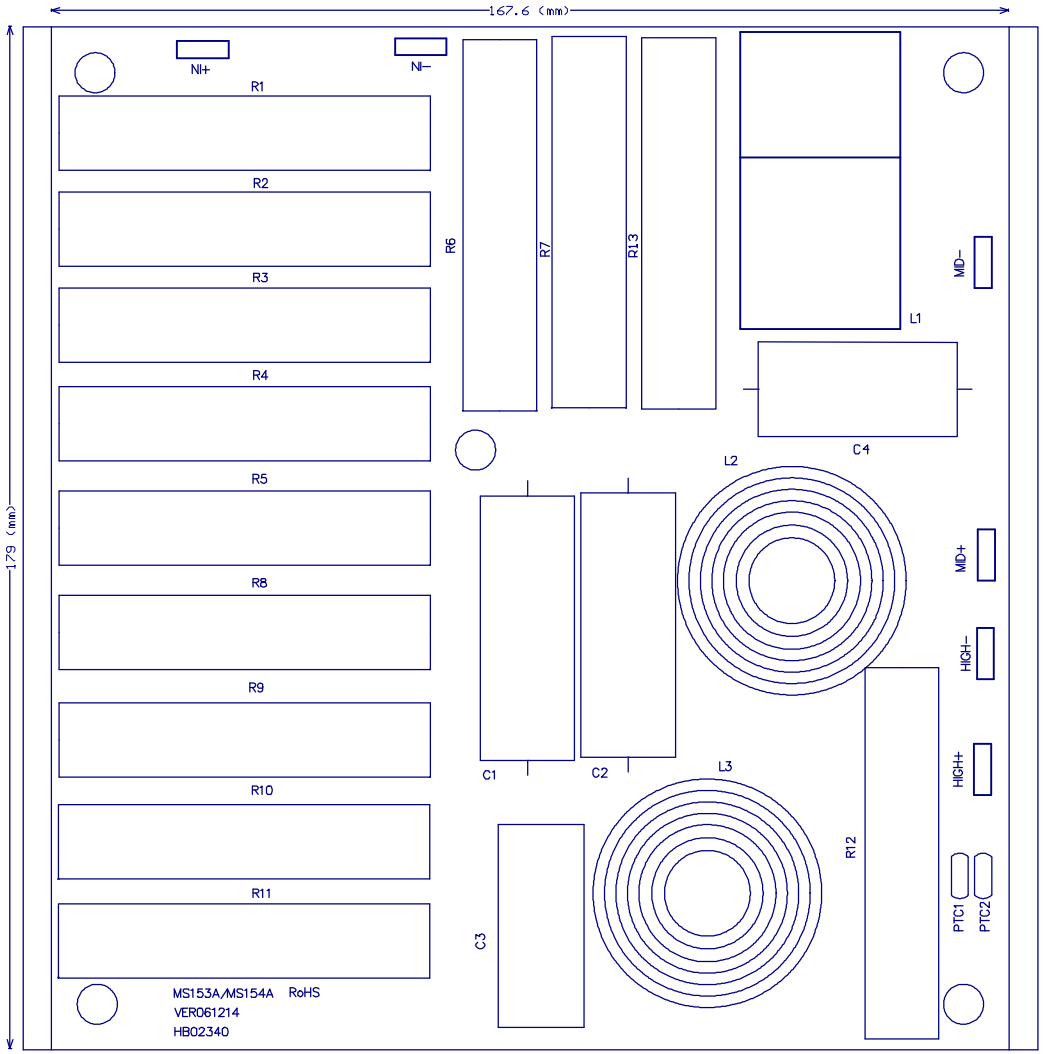
167.6 (mm)
179 (mm)
NI+
NI−
R1
R2
R3
R4
R5
R8
R9
R10
R11
R6
R7
R13
L1
C4
L2
C1
C2
L3
C3
R12
MID−
MID+
HIGH−
HIGH+
PTC1
PTC2
MS153A/MS154A RoHS
VER061214
HB02340

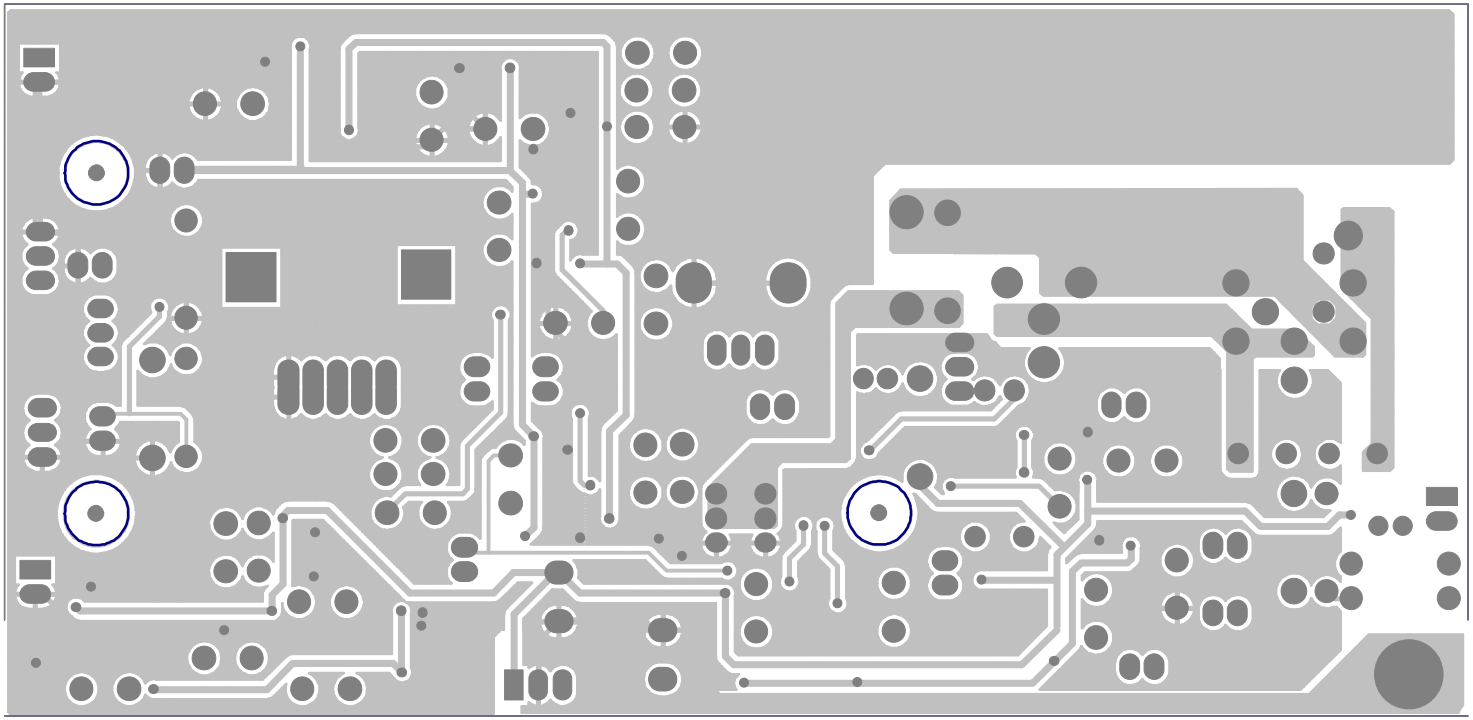

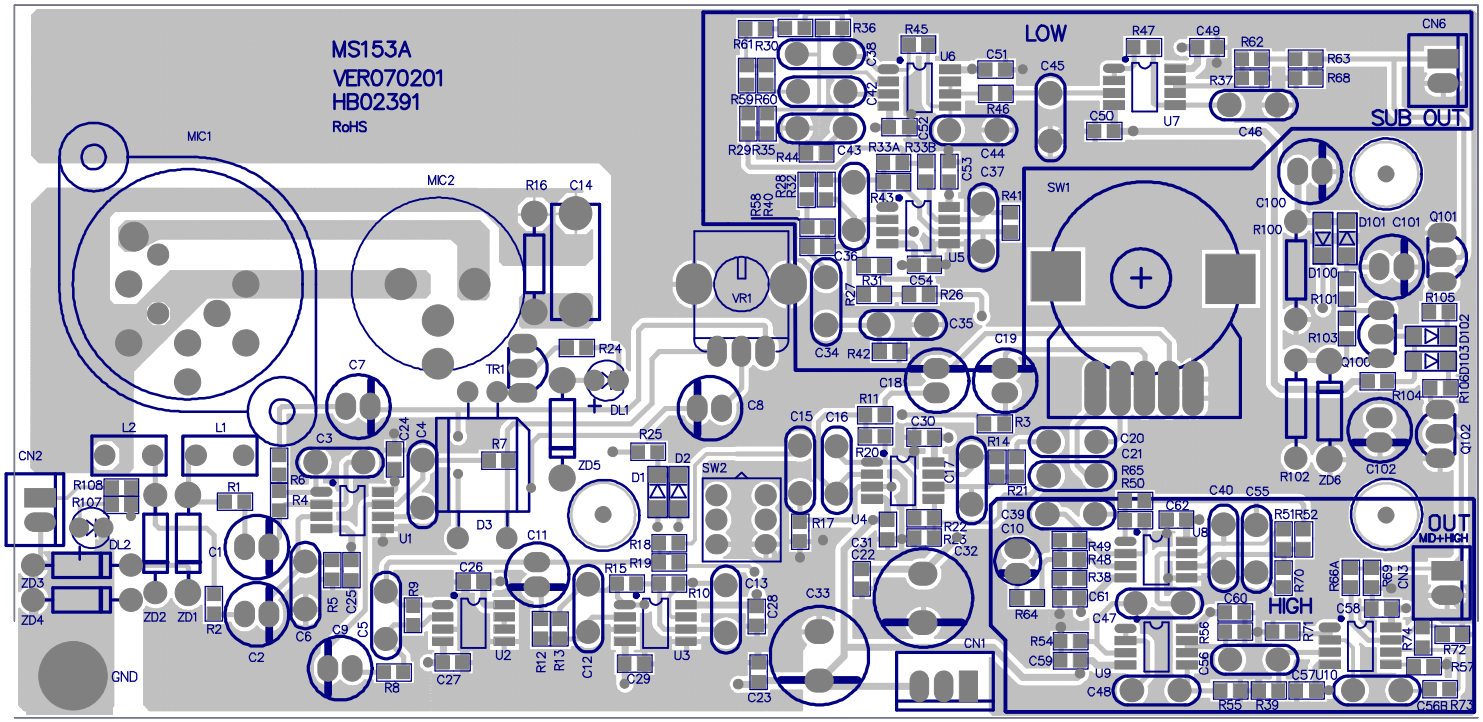
MS153A
VER070201
HB02391
RoHS
LOW
SUB OUT
OUT
MID+HIGH
HIGH
GND
MIC1
MIC2
SW1
SW2
VR1
CN1
CN2
CN3
CN6
TR1
DL1
DL2
U1
U2
U3
U4
U5
U6
U7
U8
U9
U10

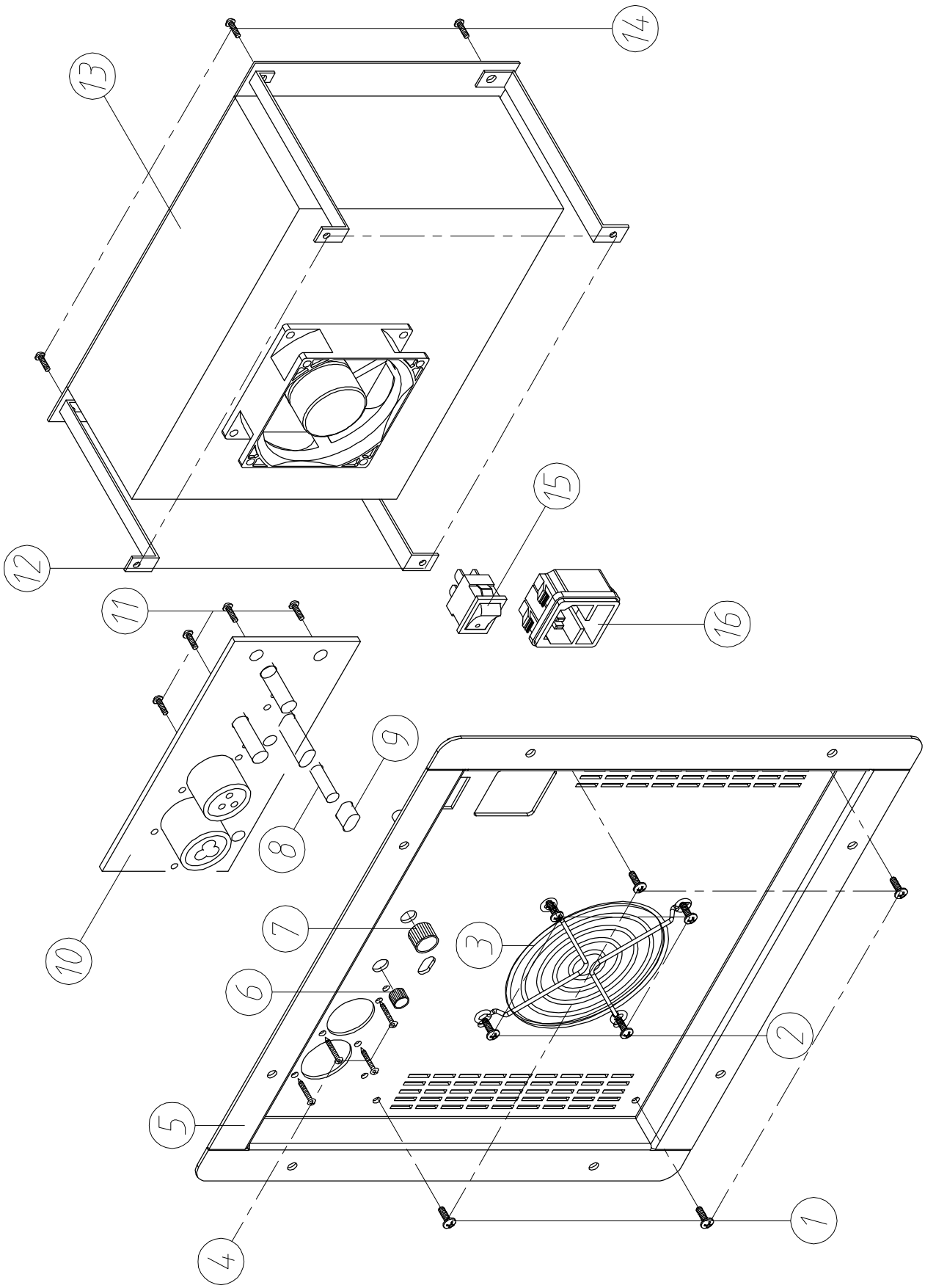
14
13
15
12
11
16
9
8
10
7
3
6
2
5
1
4

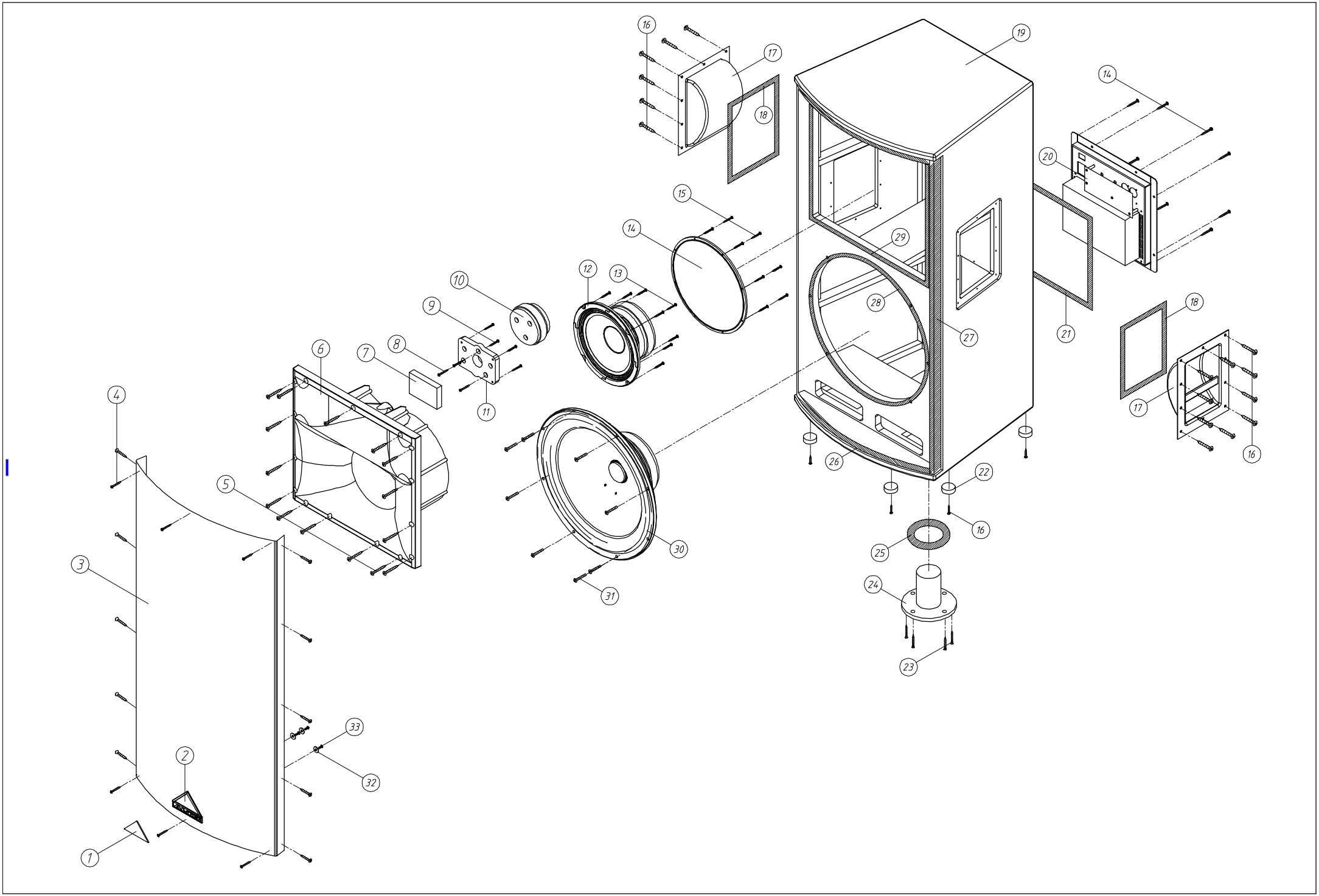
1
2
3
4
5
6
7
8
9
10
11
12
13
14
15
16
17
18
19
20
21
22
23
24
25
26
27
28
29
30
31
32
33

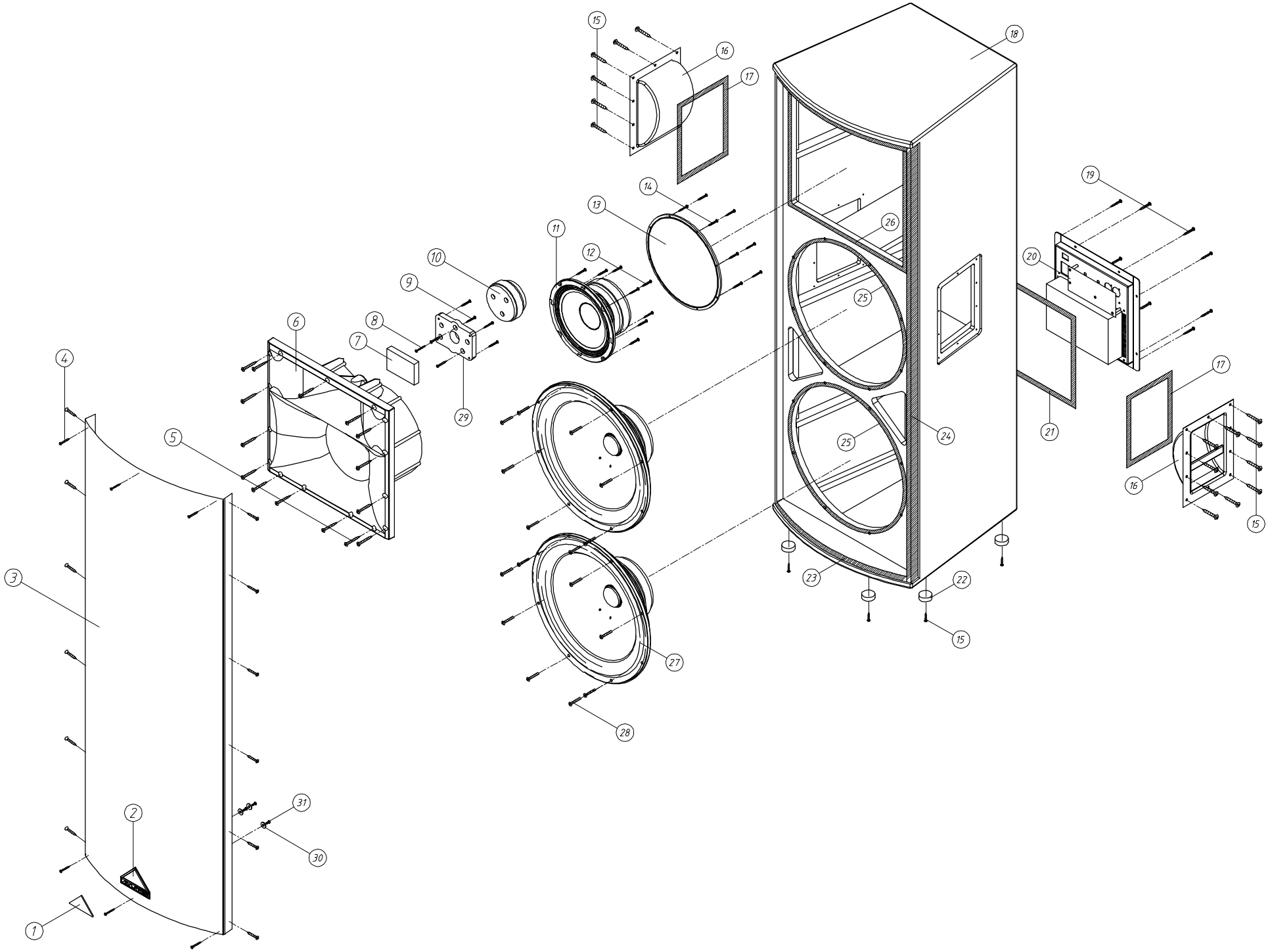
1
2
3
4
5
6
7
8
9
10
11
12
13
14
15
16
17
18
19
20
21
22
23
24
25
26
27
28
29
30
31