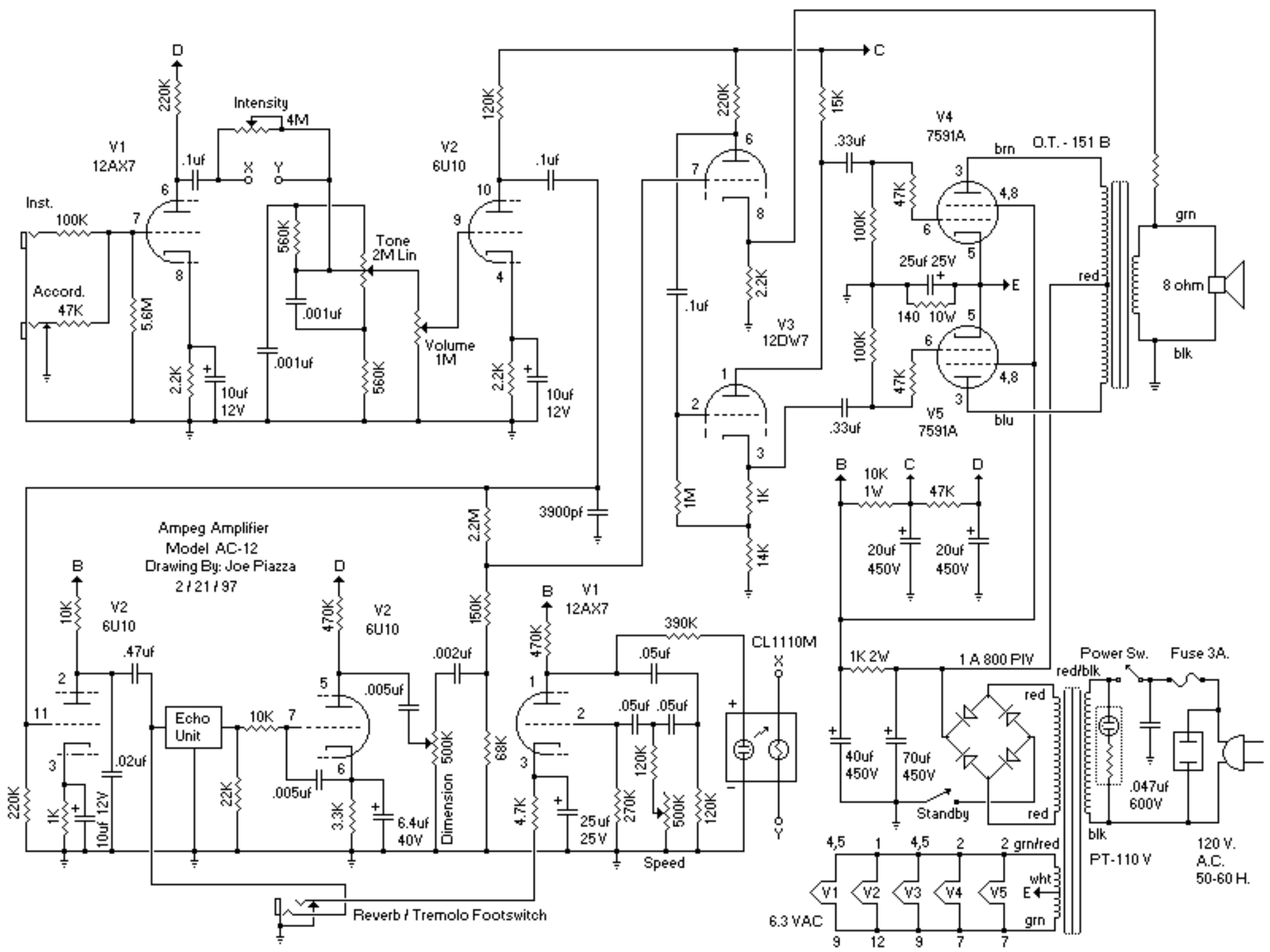
Ampeg Amplifier
Model AC-12
Drawing By: Joe Piazza
2 / 21 / 97
V1
12AX7
V2
6U10
V3
12DW7
V4
7591A
V5
7591A
Inst.
100K
Accord.
47K
5.6M
220K
.1uf
Intensity
4M
X
Y
2.2K
10uf
12V
560K
.001uf
Tone
2M Lin
Volume
1M
120K
15K
.33uf
47K
100K
25uf 25V
140 10W
O.T. - 151 B
brn
grn
red
blk
blu
8 ohm
1M
1K
14K
3900pf
2.2M
150K
68K
10K
1W
20uf
450V
1K 2W
1 A 800 PIV
40uf
450V
70uf
450V
Standby
Power Sw.
Fuse 3A.
red/blk
.047uf
600V
PT-110 V
120 V.
A.C.
50-60 H.
6.3 VAC
grn/red
wht
10K
.47uf
.02uf
Echo
Unit
22K
470K
.005uf
3.3K
6.4uf
40V
Dimension
500K
.002uf
4.7K
25uf
25V
390K
.05uf
270K
Speed
CL1110M
Reverb / Tremolo Footswitch