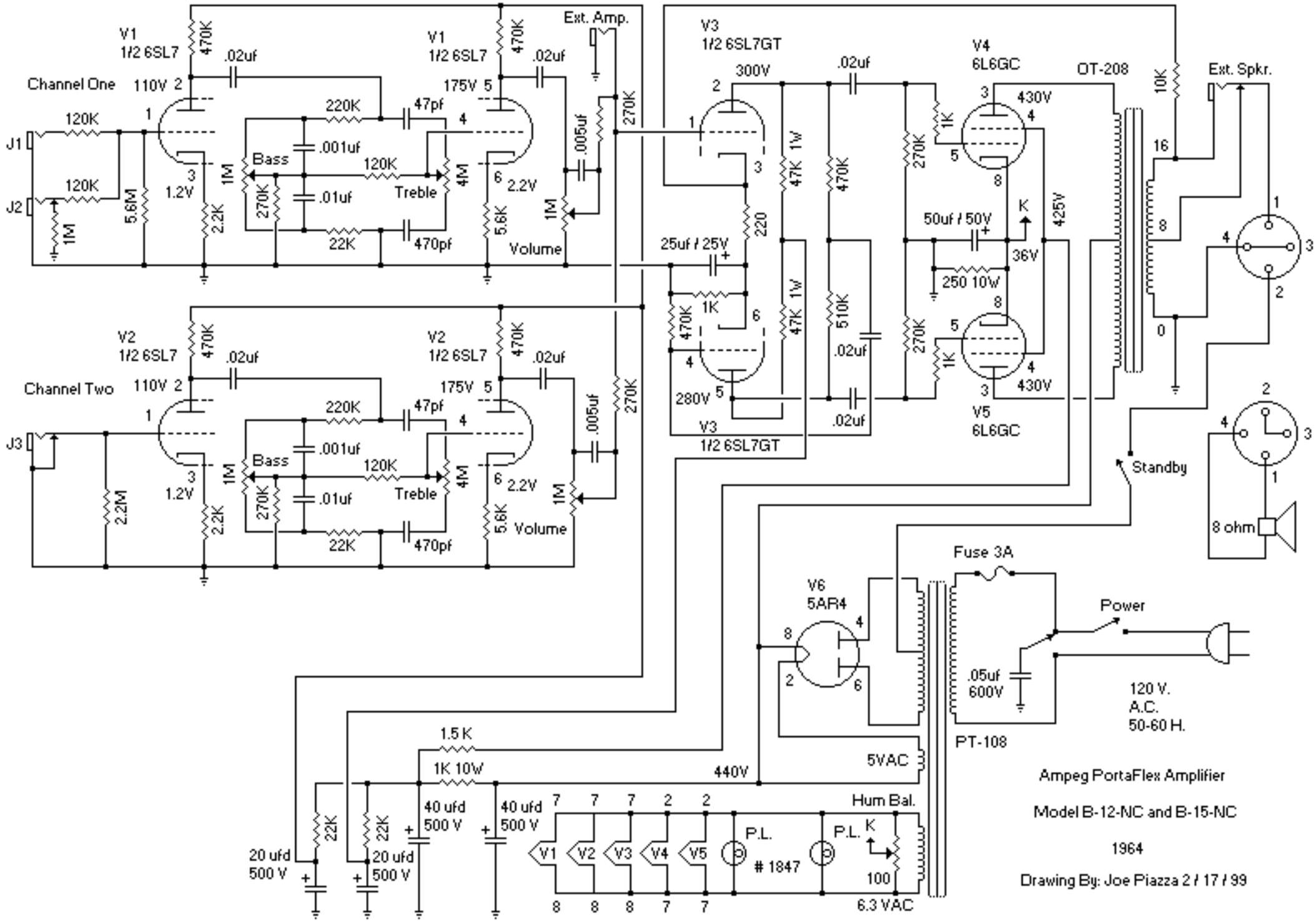
Channel One
Channel Two
V1
1/2 6SL7
V2
1/2 6SL7
V3
1/2 6SL7GT
V4
6L6GC
V5
6L6GC
V6
5AR4
OT-208
Ext. Amp.
Ext. Spkr.
Bass
Treble
Volume
Standby
Power
Fuse 3A
.05uf
600V
120 V.
A.C.
50-60 H.
PT-108
5VAC
6.3 VAC
440V
Hum Bal.
P.L.
1847
8 ohm
Ampeg PortaFlex Amplifier
Model B-12-NC and B-15-NC
1964
Drawing By: Joe Piazza 2 / 17 / 99