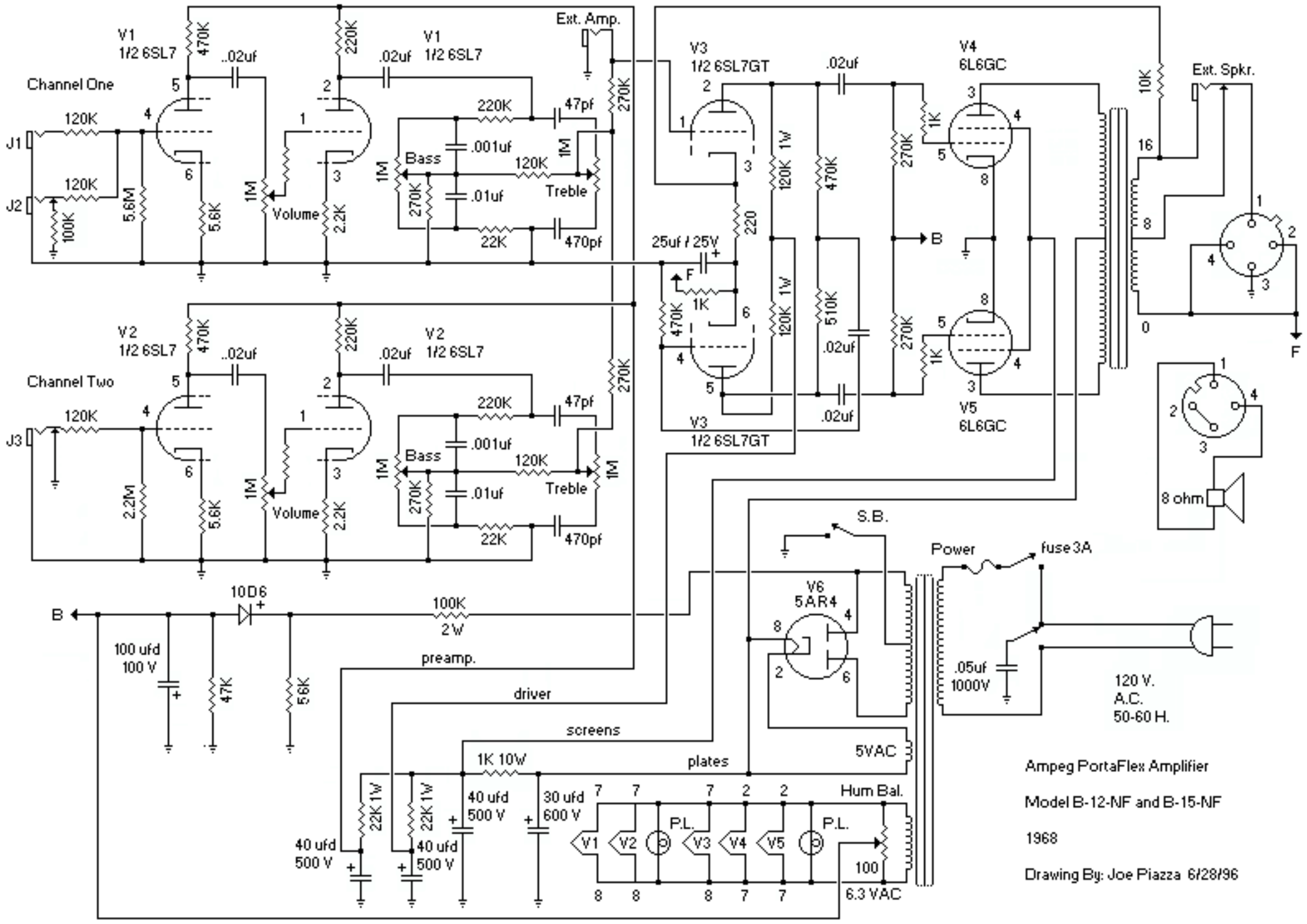
Channel One
Channel Two
V1
1/2 6SL7
V2
1/2 6SL7
V3
1/2 6SL7GT
V4
6L6GC
V5
6L6GC
V6
5AR4
Ext. Amp.
Ext. Spkr.
Bass
Treble
Volume
J1
J2
J3
470K
220K
120K
100K
5.6M
5.6K
2.2M
2.2K
1M
270K
.02uf
.001uf
.01uf
47pf
470pf
22K
25uf / 25V
1K
220
120K 1W
510K
10K
16
8
0
B
F
10D6
100K
2W
100 ufd
100 V
47K
5.6K
preamp.
driver
screens
plates
1K 10W
22K 1W
40 ufd
500 V
30 ufd
600 V
P.L.
Hum Bal.
100
6.3 VAC
5VAC
S.B.
Power
fuse 3A
.05uf
1000V
120 V.
A.C.
50-60 H.
8 ohm
Ampeg PortaFlex Amplifier
Model B-12-NF and B-15-NF
1968
Drawing By: Joe Piazza 6/28/96