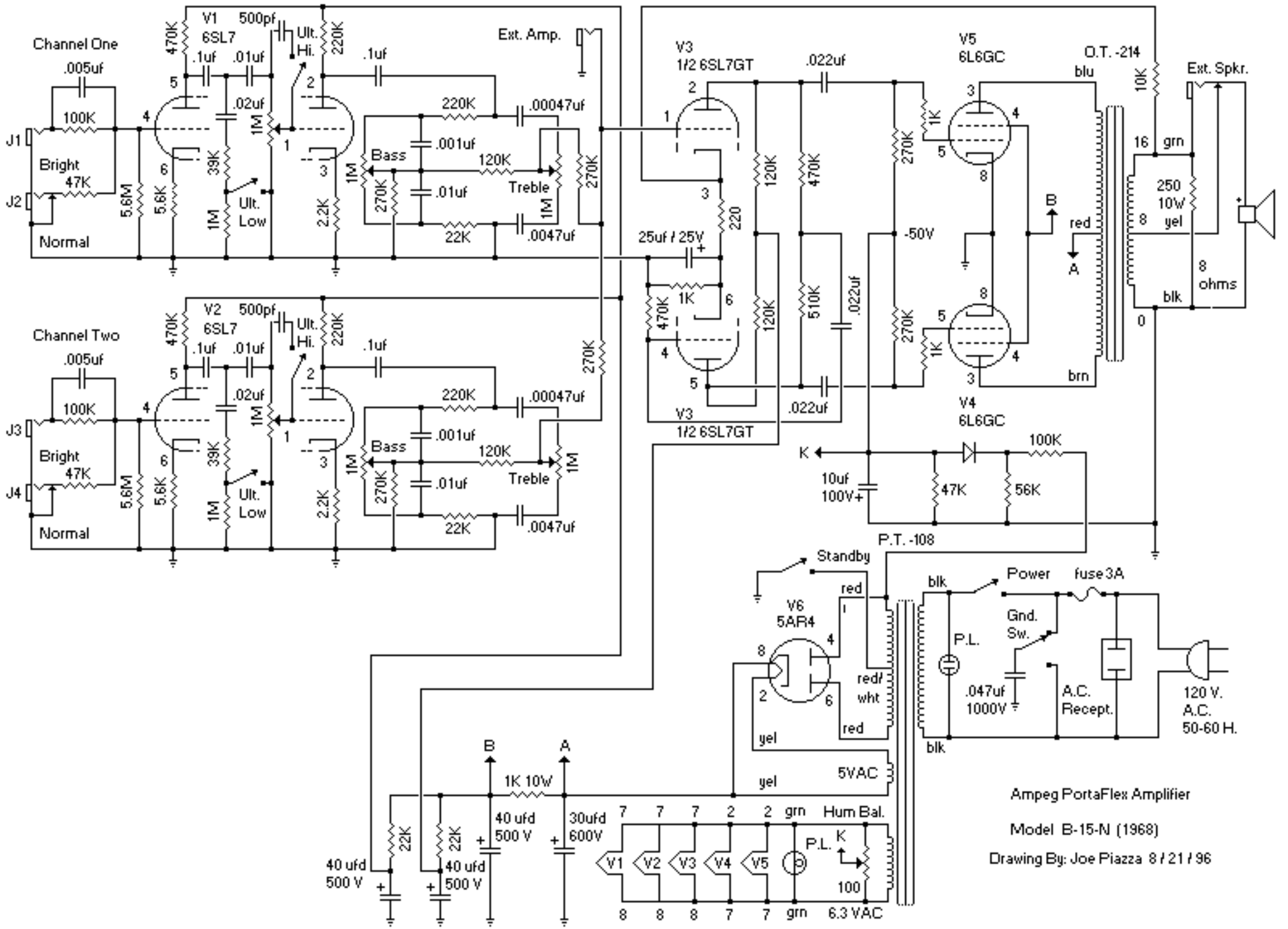
Channel One
Channel Two
V1 6SL7
V2 6SL7
V3 1/2 6SL7GT
V4 6L6GC
V5 6L6GC
V6 5AR4
Ext. Amp.
Ext. Spkr.
O.T. -214
P.T. -108
Bright
Normal
Bass
Treble
Ult. Hi.
Ult. Low
Standby
Power
fuse 3A
Gnd. Sw.
P.L.
A.C. Recept.
120 V. A.C. 50-60 H.
Hum Bal.
6.3 VAC
5VAC
8 ohms
Ampeg PortaFlex Amplifier
Model B-15-N (1968)
Drawing By: Joe Piazza 8 / 21 / 96