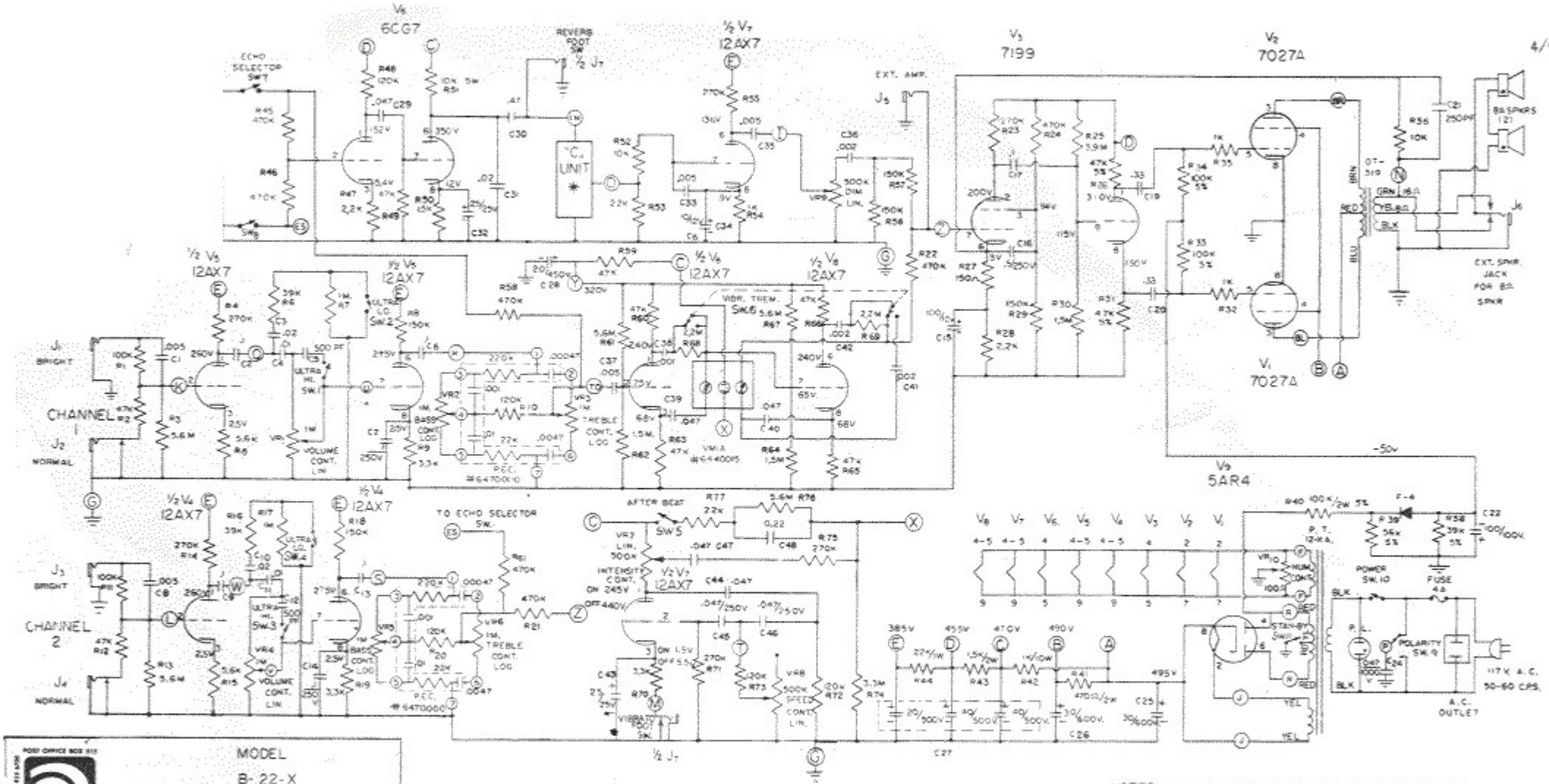


POST OFFICE BOX 515
ampeg
LINDEN, NEW JERSEY

MODEL
B-22-X
U S PATENT 3388257
TUBES
12AX7 12AX7 6CG7 12AX7 12AX7 7199
7027A 7027A 5AR4

| DRN C.W. 768 | DWG NO 04200 | 4010161 |
|---|---|---|

NOTES
1 ALL VOLTAGE READINGS WITH NO SIGNAL INSERTED
2 ALL CAPACITORS IN MFD & 400V UNLESS OTHERWISE STATED
3 ALL RESISTORS IN OHMS ½ W 10% " " "
✱ 4 C UNIT WITH INSULATED JACKS OUR NO 6310005