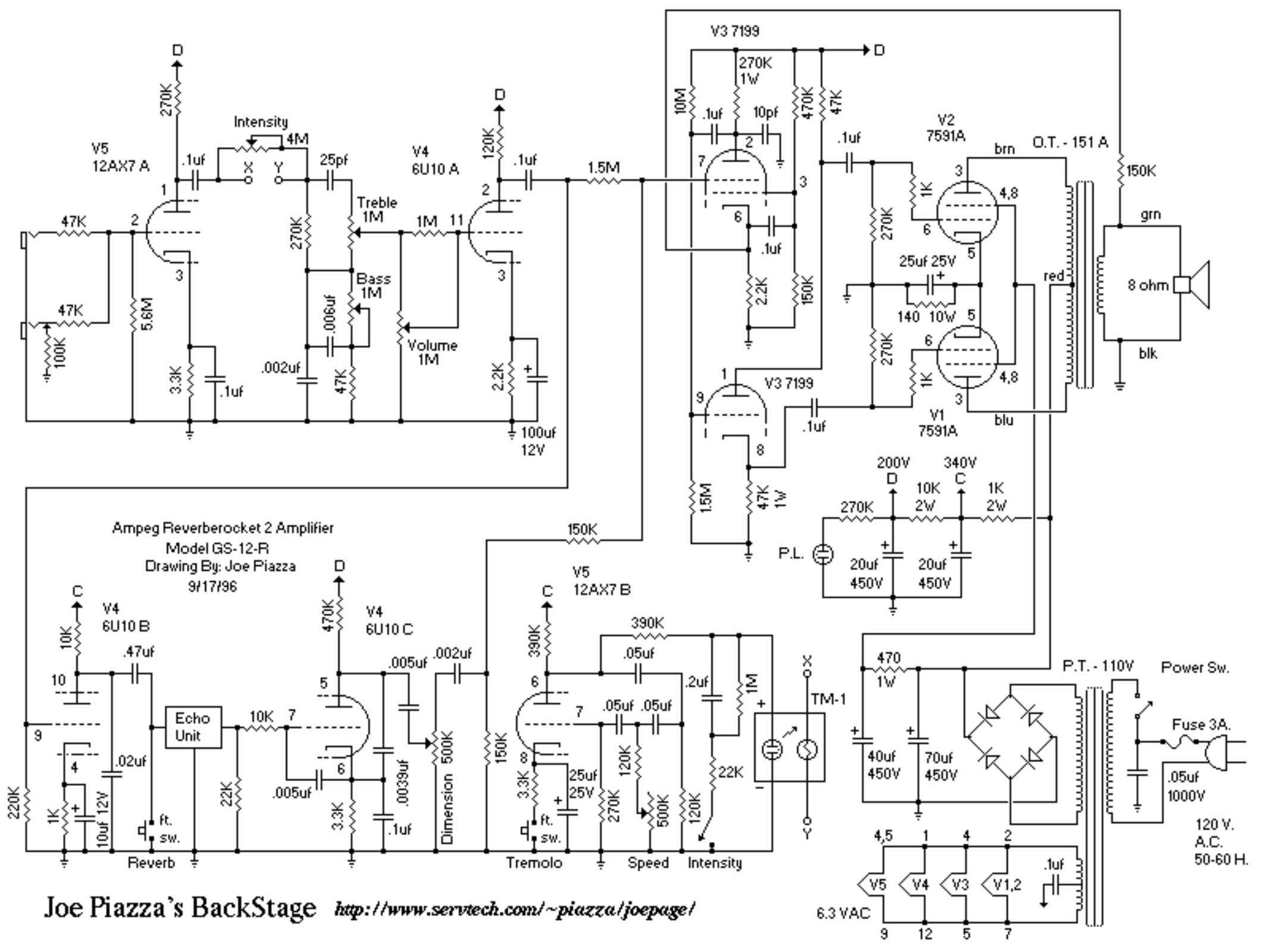
Ampeg Reverberocket 2 Amplifier
Model GS-12-R
Drawing By: Joe Piazza
9/17/96
V5
12AX7 A
V4
6U10 A
V3 7199
V2
7591A
V1
7591A
O.T. - 151 A
8 ohm
Intensity
Treble
1M
Bass
1M
Volume
1M
V4
6U10 B
V4
6U10 C
V5
12AX7 B
Echo
Unit
Reverb
Tremolo
Speed
Intensity
Dimension
500K
TM-1
P.L.
P.T. - 110V
Power Sw.
Fuse 3A.
120 V.
A.C.
50-60 H.
6.3 VAC
Joe Piazza's BackStage
http://www.servtech.com/~piazza/joepage/