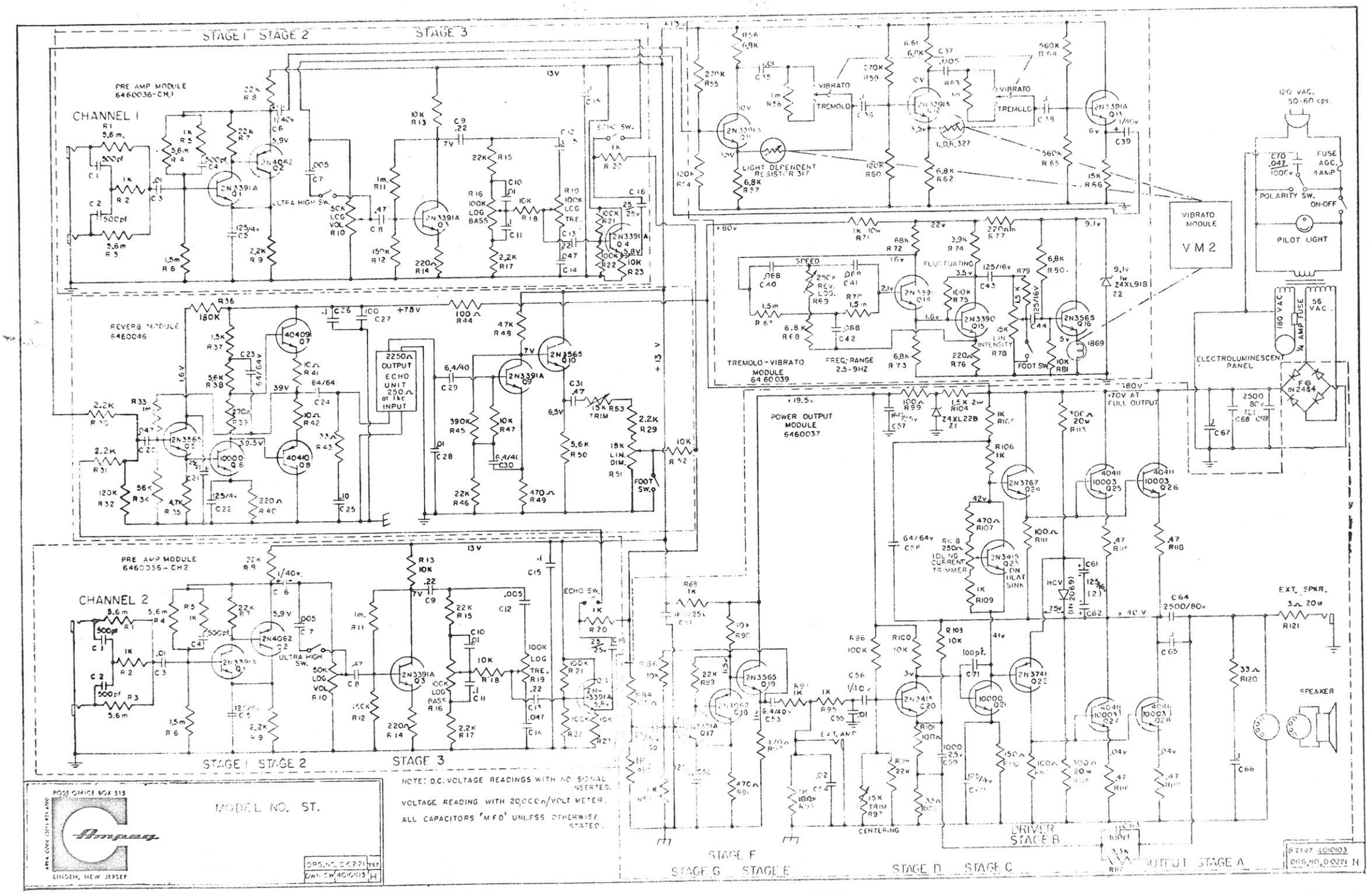
STAGE 1 STAGE 2 STAGE 3
PRE AMP MODULE 6460036-CH.1
CHANNEL 1
REVERB MODULE 6460046
2250Ω OUTPUT ECHO UNIT 250Ω at 1kc INPUT
PRE AMP MODULE 6460036-CH2
CHANNEL 2
ULTRA HIGH SW.
ECHO SW.
LIGHT DEPENDENT RESISTOR 317
VIBRATO
TREMOLO
TREMOLO-VIBRATO MODULE 6460039
FREQ. RANGE 2.5-9HZ
FLUCTUATING
SPEED
FOOT SW.
VIBRATO MODULE VM2
120 VAC. 50-60 cps.
FUSE AGC. 4 AMP
POLARITY SW. ON-OFF
PILOT LIGHT
ELECTROLUMINESCENT PANEL
POWER OUTPUT MODULE 6460037
+70V AT FULL OUTPUT
IDLING CURRENT TRIMMER
ON HEAT SINK
EXT. SPKR.
SPEAKER
EXT. AMP
CENTERING
DRIVER STAGE B
OUTPUT STAGE A
STAGE F
STAGE G STAGE E
STAGE D STAGE C
NOTE: D.C. VOLTAGE READINGS WITH NO SIGNAL INSERTED.
VOLTAGE READING WITH 20,000Ω/VOLT METER.
ALL CAPACITORS 'MFD' UNLESS OTHERWISE STATED.
MODEL NO. ST.
POST OFFICE BOX 515
LINDEN, NEW JERSEY
DRG. NO. D-0221
DWN. CW 4010103 H