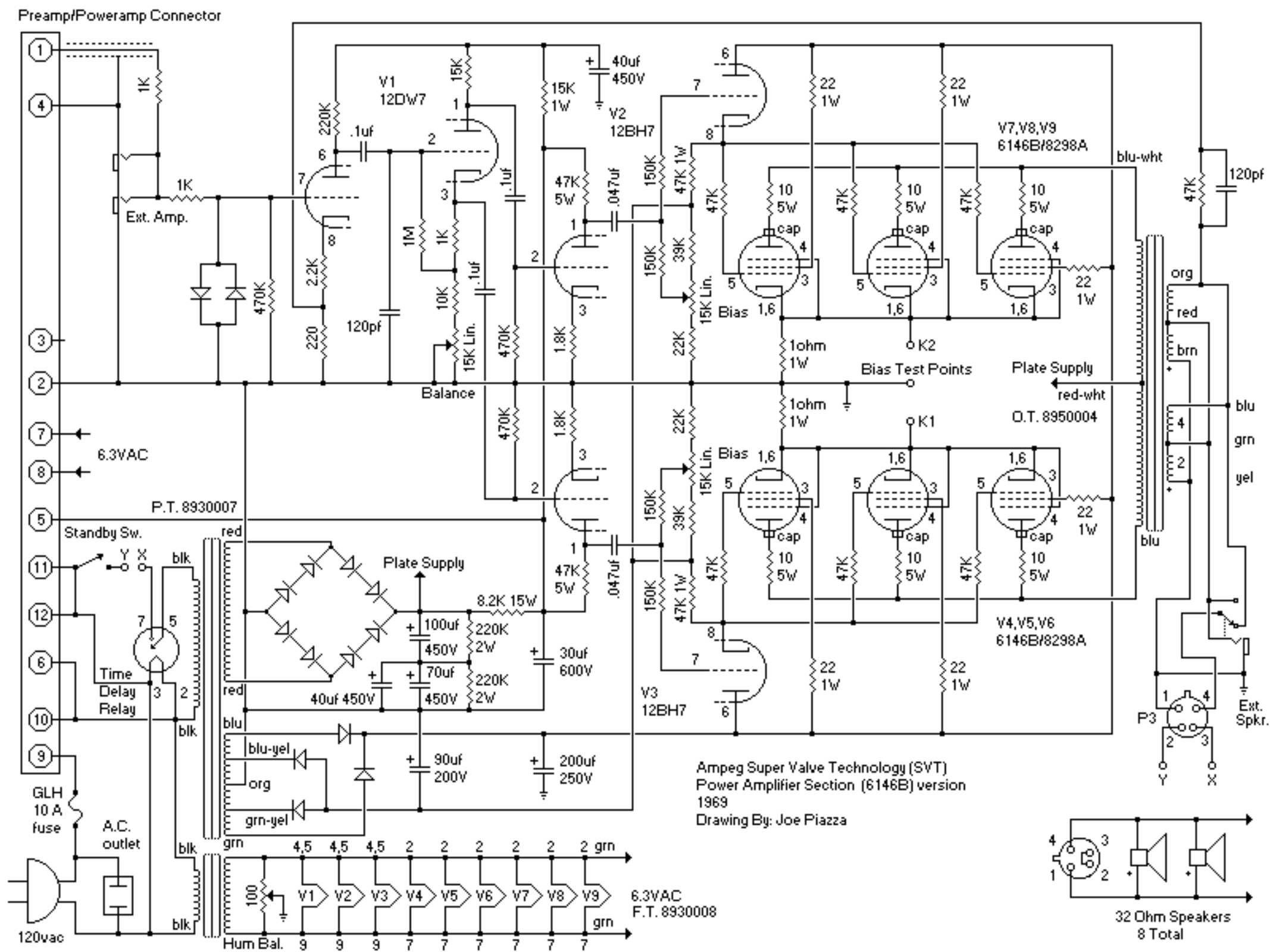
Preamp/Poweramp Connector
V1
12DW7
V2
12BH7
V3
12BH7
V7,V8,V9
6146B/8298A
V4,V5,V6
6146B/8298A
Ext. Amp.
Balance
Bias
Bias Test Points
Plate Supply
red-wht
O.T. 8950004
K1
K2
6.3VAC
P.T. 8930007
Standby Sw.
Time
Delay
Relay
GLH
10 A
fuse
A.C.
outlet
120vac
Hum Bal.
6.3VAC
F.T. 8930008
Ext.
Spkr.
P3
Ampeg Super Valve Technology (SVT)
Power Amplifier Section (6146B) version
1969
Drawing By: Joe Piazza
32 Ohm Speakers
8 Total