ARCAM DELTA

DELTA 70 COMPACT DISC PLAYER

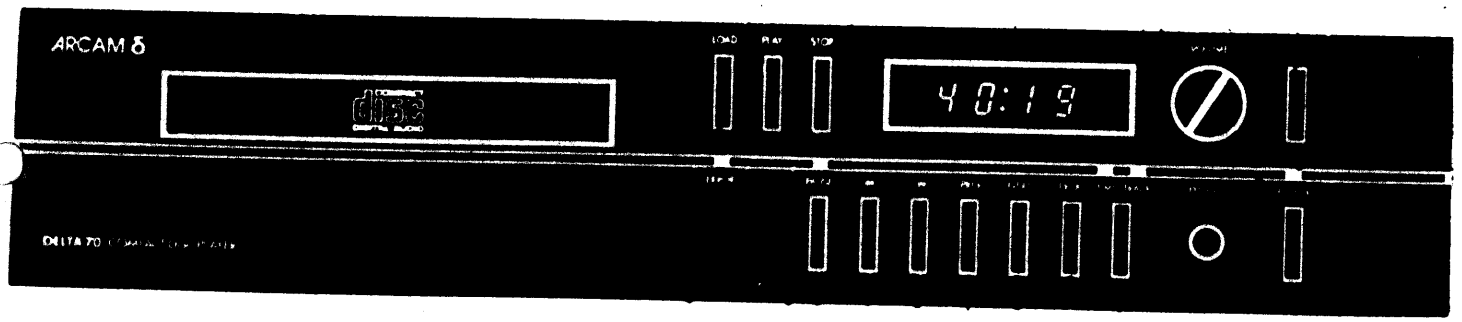

OUT to the control
ted by the control

oating
fm assembly or
oe likened to a
follows track and
to the information

coder board
rol and
tions back to the A
s doing.

ry together with
e servo
arching in the
p. In turn the A
information) back
ntact with the
l data for display
control micro
ol micro merely
remote control
ries out the

al form, performs a
ing the 64k DRAM
ntaining the 16 bit
e A chip also
o the servo micro
he turntable motor
er clock frequency
uired data rate.

can
tal
ass
4 x the
and

to left

es,
s

s clock

DAC
moves
on

e used
for
the
d

and

and
ass on
drive
rol

ne
s.

the

cuit.
back
nal

the service information r a recent
ls of signals and typic waveforms.

ormer produces two sets
rectification; +/- 12V
wer current. From the four rails
are derived for differ parts of
ailed in the table. I. voltage
t the audio supply whic ses

+/- 11V)
---

t source made up of Q20 Q202
ut voltage on the emitt is
ia the zener D205. Q2 then robs
so that a stable output ltage is
e will be equivalent to e zener
voltage of Q203; approx ely 10.7V.
in an identical mode.

rowbar circuit on the - rail.
hes on and lowers the - rail to
caused by loss of the + supply.

consists of a relay dri by Q209.
via D207 and R209 gradu y charges
conds the voltage is su cient to
elay. On switch off Q
and the audio output i uted.

event switch on and swi off
nnoyance.

MHz)

48 MHz). Sourced direct om the
Delta 70.

LIST OF ABBREVIATIONS

CIRC	Cross Interleaved Reed - Solomon Code.
CDM2	Model number of the disc playing unit.
DRAM	Dynamic random access memory. Re-useable memory.
DAC	Digital to Analogue converter.
EFM	Eight to fourteen modulation. Sixteen bit audio samples are split into two 8 bit words which in turn are coded into 14 bit words incorporating error detection bits before encoding onto the disc.
FIFO	First in First out. Serial buffer in one section of the DRAM where data from the disc is read in one end then read out at the other. A "reservoir" for data that absorbs differences between the rate that data comes off the disc and the master clock frequency.
FRAME	Block of 588 bits of data on the disc containing 12 x 16 bit samples (6 left and 6 right) including error correction, synchronisation and sub coder.
OPU	Optical Pickup Unit. Optical assembly or "light pen".
RADIAL	Movement across the disc.

essing

ch includes track, index, and time data is decoded
. signal within the A chip. The information is
the A chip to the servo micro by QDA, QCL, QRA. The
in turn passes this information onto the display micro
bus.

ut

or the digital output DOBM is done in the B chip.
SDAB from the A chip is combined with audio samples
ied format and output via an impedance matching
solation transformer to the rear panel socket.

le data (time and track information)
le clock
le request/acknowledge (handshake line)

ode clock A to B
ode data A to B

y is additional to the Philips 16 bit I.C.s and
Arcam Delta 70. All decoding, motor control,
and audio data rate within the A, B and DAC I.C.s is
to this clock. The clock circuit relaces the
lly connected across pins 10 and 11 of the B chip.

z crystal oscillator based on two inverters in IC306
to pin 11 of the B chip. A buffer within the B chip
s this clock signal from pin 9 into pin 19 of the A

ock circuit also outputs a half rate (5.6448MHz)
frequency to the DAC.

for the master oscillator is separately stabilised to
e +20V rail by use of the precision adjustable zener

ne track information on the
of the A chip. This signal
tracted from it by use of a
network is on pin 22 and the
for syncing a scope to
in 27. Data buffering and
DRAM. Audio data is
line. The clock for DAAB
defined by WSAB. Erroneous

data and contains digital
lled by the servo micro.
ing means that data leaving
ur times the rate as DAAB
have the same relationship
ut at 4 x the frequency.

nected to the DAC as is
Instead, an identical but
lded by the master clock

e correctly, +5V, -6V, -15V.
for the bit-switches in each
good linearity and low
mples on DABD are separated
ome an output current to the
ue of the audio samples.
hat it is not possible to
h an oscilloscope. The
ert this current to a

n two stages. The first
utput current from the DAC
a voltage on the collector
air with Q5 as the output
two current sources. The
Q5 back to the base of Q1
sets the gain in the audio
above 20KHz, this being the
consisting of R13, C5, C6
hasis rolloff in the audio
Q12 is used as a switch for

air, Q8/9 with current source
9/20. Outside the audio
set by R15/16 and C7/8.
stage roll off forms a 3 pole
ter, - 3dB point set at

high d.c. gain and acts as a
the output stage is very
CN op amp with very good

til the audio stages have
period is set by a time delay

Display functional description

bcoded data from the servoprocessor is read by the keyboard
ocessor which prepares the relevant parts of data for the display.
ta is sent to the display circuit via the control bus in
n-acknowledge mode when data enable is low.

Input data format

e display serial data is made up from two signals,serial data and
ock.
ing a format of a leading "1" followed by the 35 data bits allows
ta transfer without an additional load (strobe) signal.
e 35 data bits are latched after the 36 data bit is complete.
e display changes only if the serial data bits differ from the
evious time.

e timing diagram shows the start bit "1" preceeded by the 35 bits of
ta. At the 36 clock strobe signal is generated by a BCD counter &
me logic. at the same time as the clock which loads the 35 bits of
ta into the shift registers when latched drive the display.
the same time as the strobe going high the output of the RS
stable goes low which stops the clock until the next start bit is
esent.
e BCD counter is reset when data enable goes low.

3. CDM2 - DECODER SIGNALS

Signals between the CDM2 and Decoder board

$\overline{SI}$ Start Initialise - switches on the laser and focus circuit.

RD Ready - signal from CDM2 that the laser is on and that the mechanism has found focus.

TL Track Loss - signal from CDM2 that it has jumped off track. Outputs a pulse every time a track is crossed, so can be counted by the servo micro to tell where the pickup is.

RE dig Radial Error digital - Indication of radial error signal in digital form. Indicates to the servo micro if the light pen is moving from the inside of the disc to the outside by making a 0 - 1 transition or outside to inside by making a 1 - 0 transition.

DODS Drop out detection supression. When the servo micro detects that the signal from the disc has been lost (i.e. a dropout of data) it sets this line low. The line clamps the AGC of the photodiode amplifier to its present level until signal is restored.

RPU Radial Pulse. Used by the servo micro to alter the gain of the radial control amplifier depending on whether there is local control of the radial position (Radial Error processor I.C.) or control by servo micro using the 4 bit DAC.

B0-B3 4 Bit control lines from the servo micro to the internal DAC in the Radial Error Processer I.C. Used by the servo to move the lightpen to the inside or outside of the disc and at what velocity.

H.F. High Frequency signal. An amplified signal from the photodiods reading the information off the disc.

HFD High Frequency Dropout - signal from the CDM2 to the A chip that a dropout in signal has occurred. Automatic level setting in the data slicer and phase detector in the A chip are clamped to their present level on receipt of this signal.

M.C. Motor control. This is a high frequency square wave for control of the turntable motor speed and direction. As a 1:1 mark\space square wave (i.e. a mean D.C. level of 50%) the motor is stationary. If the M\S ratio alters so that the mean level rises then the disc will rotate clockwise (from above), the normal direction for playback. If the M\S ratio causes the mean level to fall below 50% then the turntable will turn anticlockwise. Speed is governed by how far the mean level is from 50%. ("Hyperdrive"occurs when the M.C. signal is faulty and is at either 0V or +5V.)

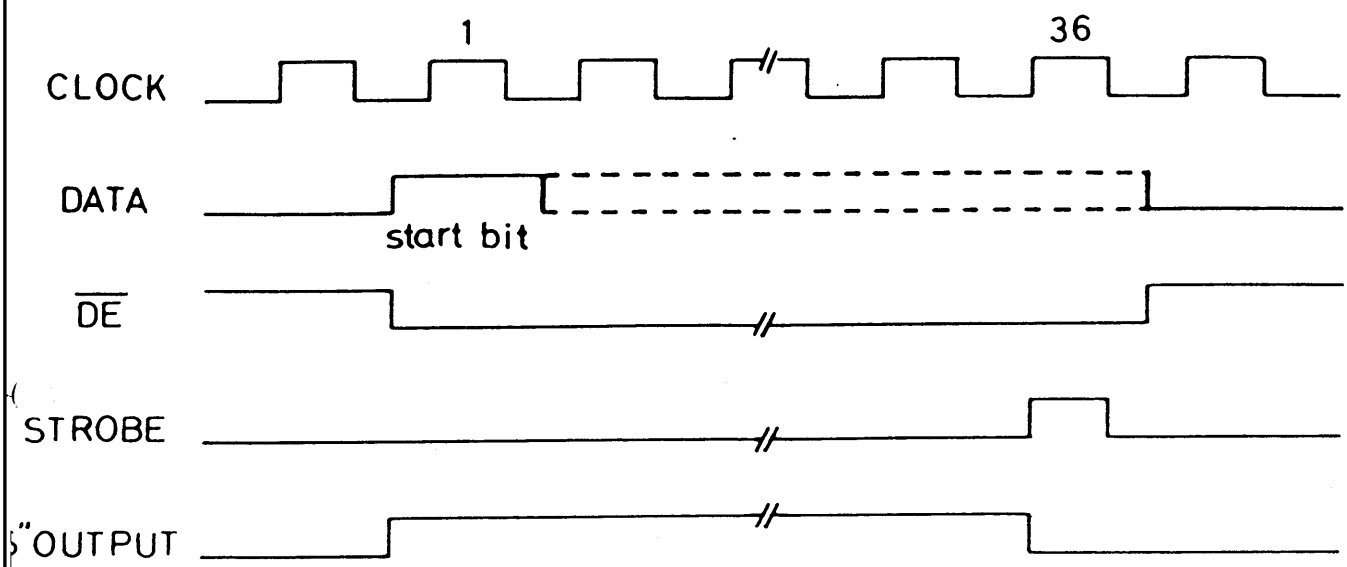
1
36
CLOCK
DATA
start bit
DE
STROBE
OUTPUT

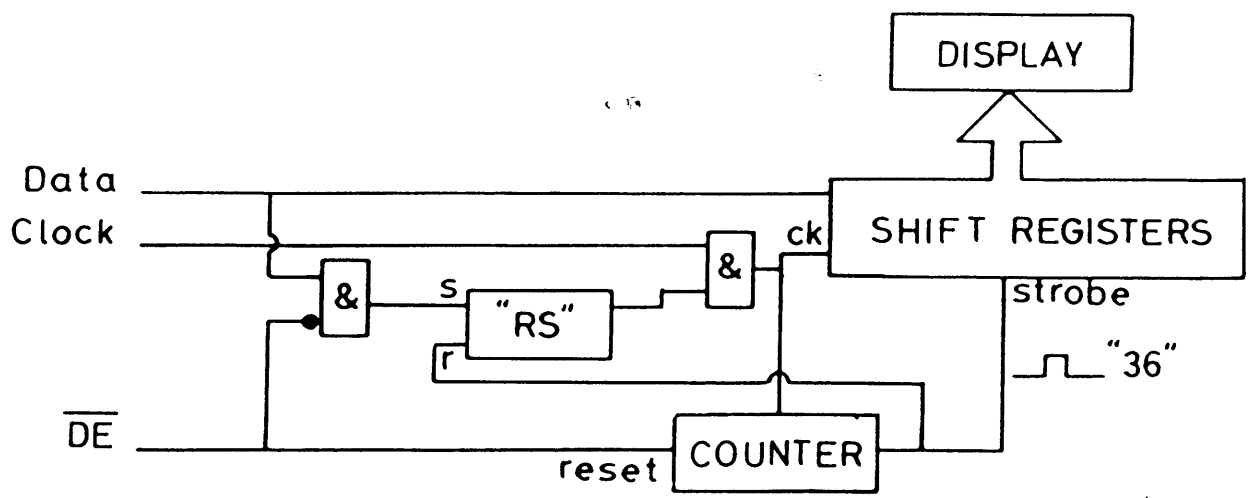
DISPLAY
Data
Clock
SHIFT REGISTERS
ck
&
&
s
"RS"
r
strobe
"36"
DE
reset
COUNTER

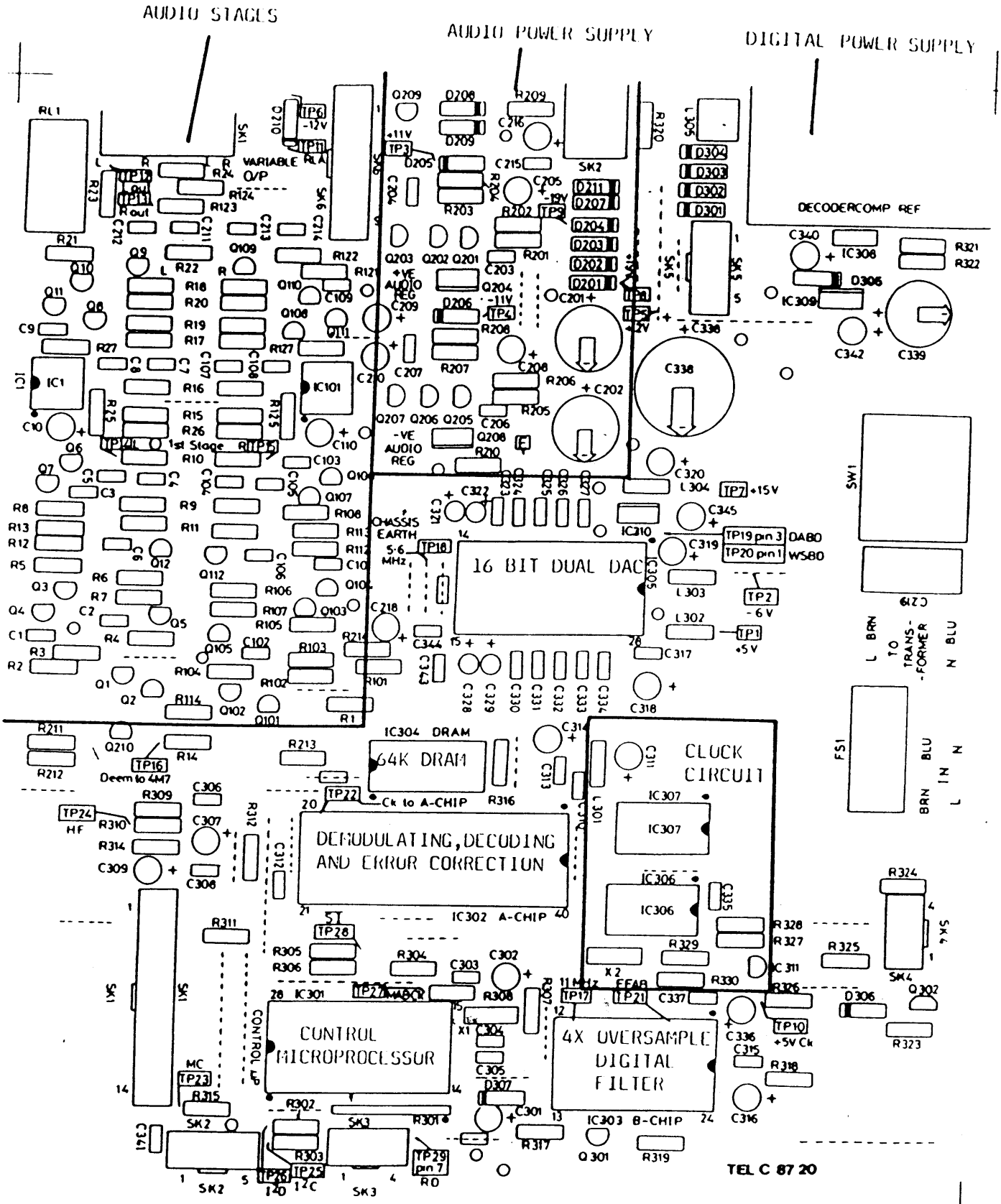
AUDIO STAGES
AUDIO POWER SUPPLY
DIGITAL POWER SUPPLY
VARIABLE O/P
DECODERCOMP REF
16 BIT DUAL DAC
64K DRAM
IC304 DRAM
CLOCK CIRCUIT
DEMODULATING, DECODING AND ERROR CORRECTION
IC302 A-CHIP
CONTROL MICROPROCESSOR
4X OVERSAMPLE DIGITAL FILTER
IC303 B-CHIP
CHASSIS EARTH
1st Stage
-VE AUDIO REG
+VE AUDIO REG
TO TRANS-FORMER
L BRN
N BLU
BRN BLU
L IN N
TEL C 87 20

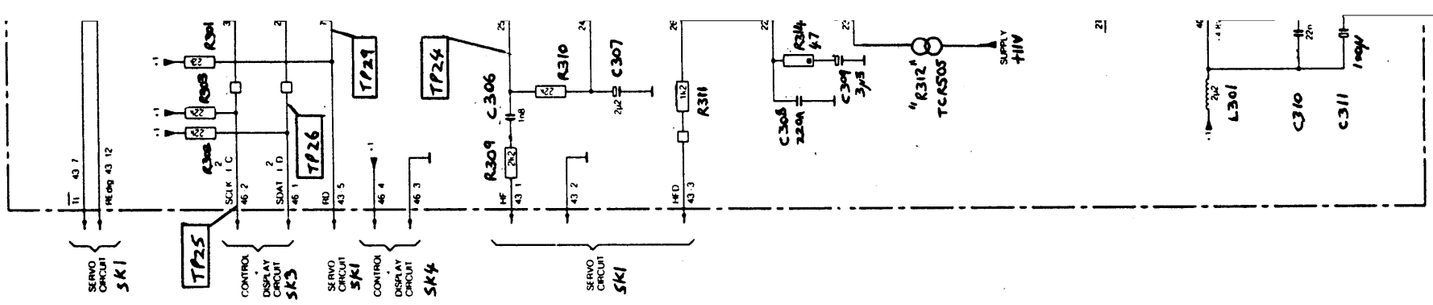

SERVO CIRCUIT SK1
CONTROL DISPLAY CIRCUIT SK3
SERVO CIRCUIT SK1
CONTROL DISPLAY CIRCUIT SK4
SERVO CIRCUIT SK1
TP25
TP26
TP29
TP24
R301
R303
R308
R309
R310
R311
C306
C307
C308
C309
R314
"R312" TCR505
SUPPLY +11V
L301
C310
C311

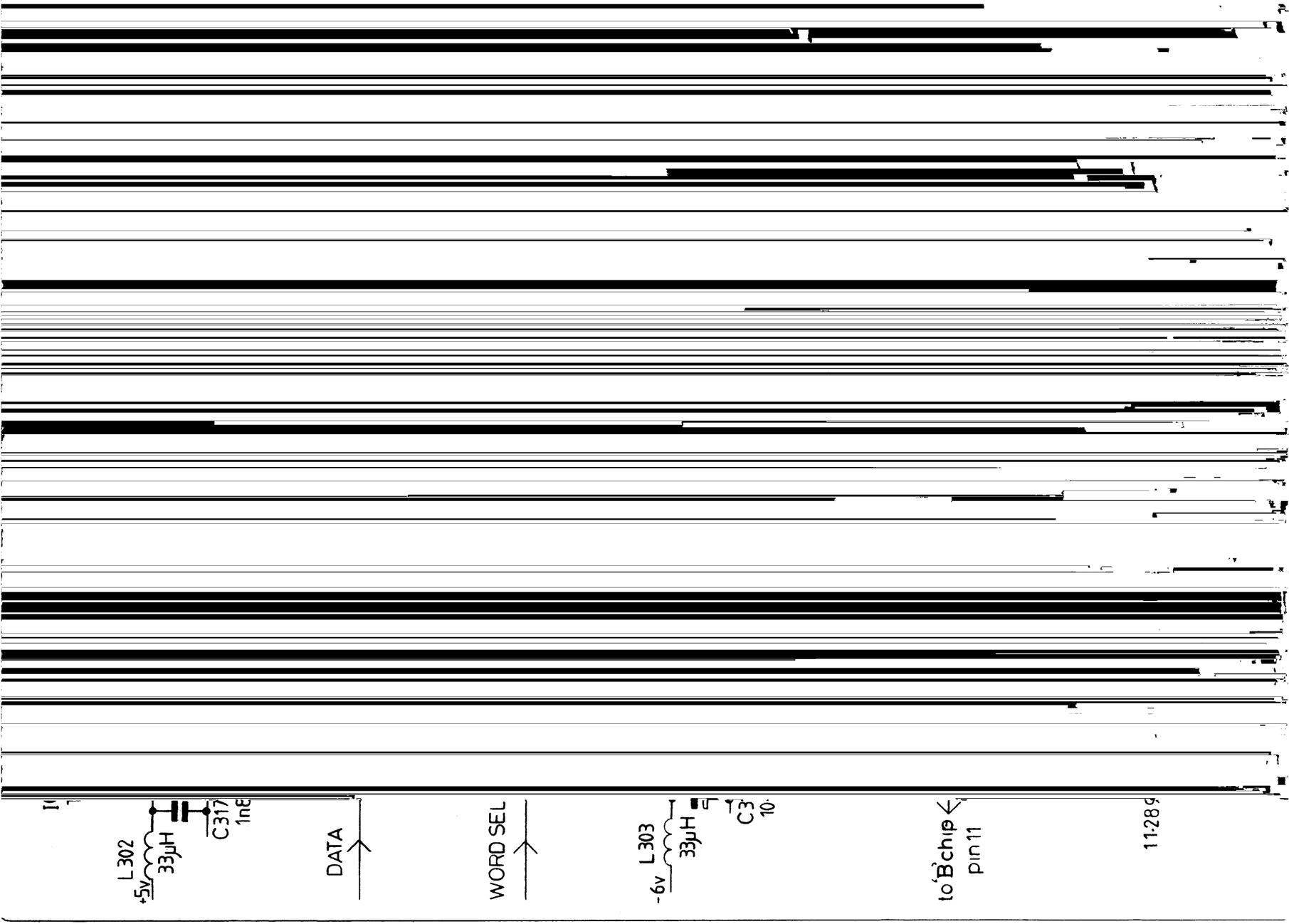
L302
+5v
33µH
C317
1nF
DATA
WORD SEL
L303
-6v
33µH
C3
10
to 'B' chip
pin 11
11-289

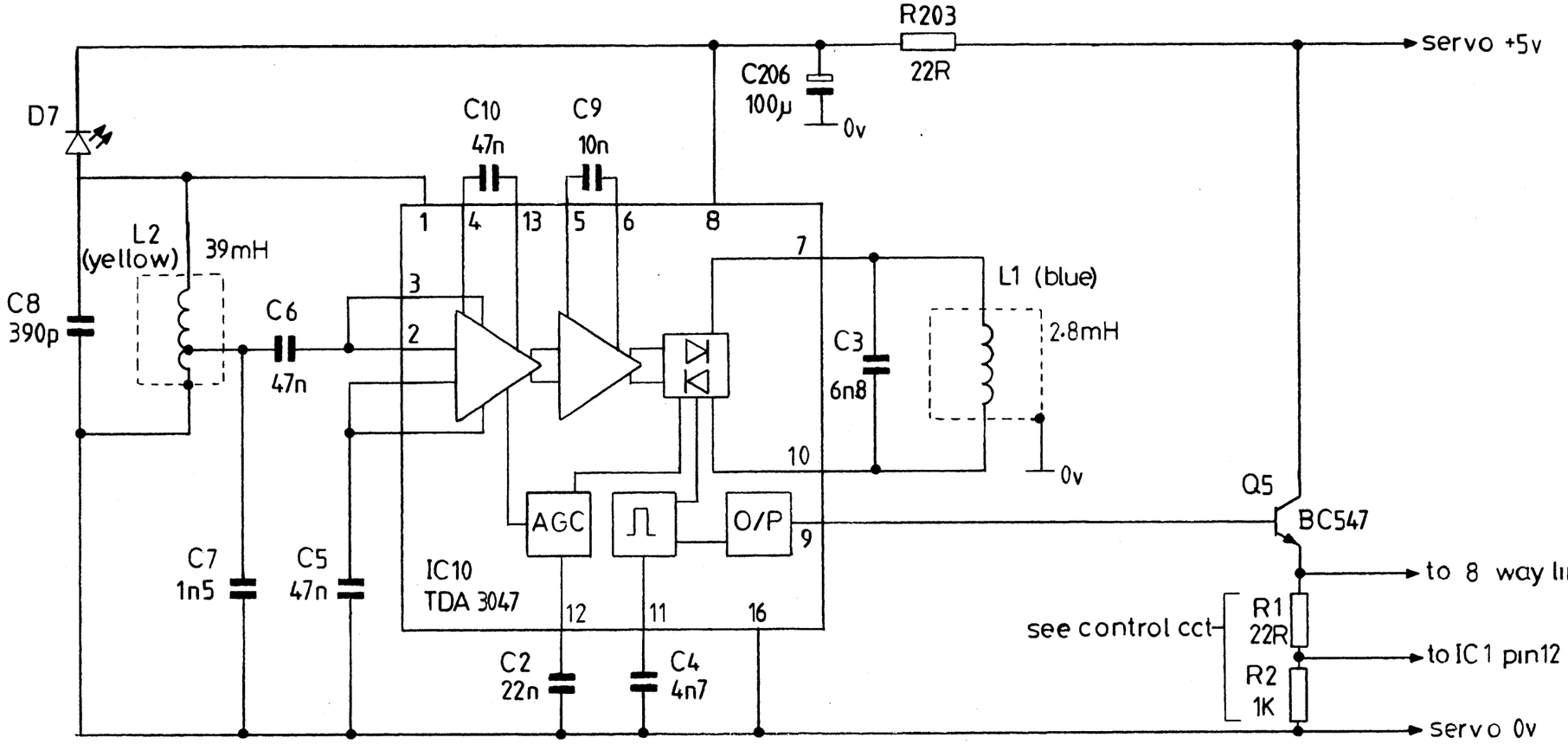

ARCAM DELTA 70 C·D· PLAYER

REMOTE CONTROL RECEIVER

Issue: 5

Date :

Drawn by: P Newton

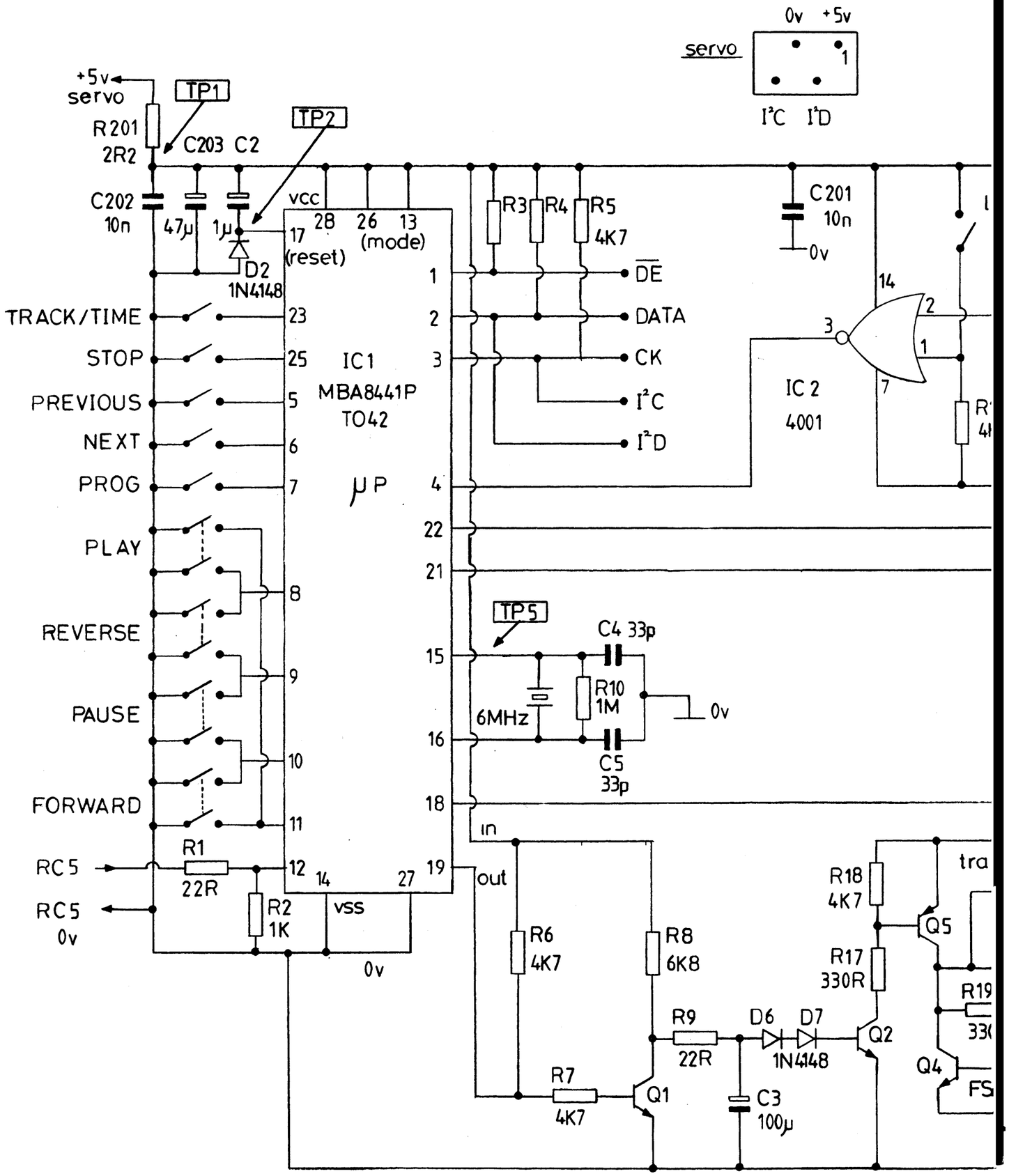
servo
0v
+5v
1
I²C
I²D
+5v
servo
TP1
TP2
R201
2R2
C203
C2
C202
10n
47µ
1µ
D2
1N4148
vcc
28
26
13
(mode)
17
(reset)
R3
R4
R5
4K7
C201
10n
0v
DE
DATA
CK
I²C
I²D
TRACK/TIME
STOP
PREVIOUS
NEXT
PROG
PLAY
REVERSE
PAUSE
FORWARD
23
25
5
6
7
8
9
10
11
IC1
MBA8441P
TO42
µP
1
2
3
4
22
21
15
16
18
19
IC 2
4001
14
2
3
1
7
TP5
C4 33p
6MHz
R10
1M
0v
C5
33p
in
out
RC5
RC5
0v
R1
22R
12
14
27
R2
1K
vss
0v
R6
4K7
R8
6K8
R7
4K7
Q1
R9
22R
D6
D7
1N4148
Q2
C3
100µ
R18
4K7
R17
330R
Q5
Q4
R19
FS
tra

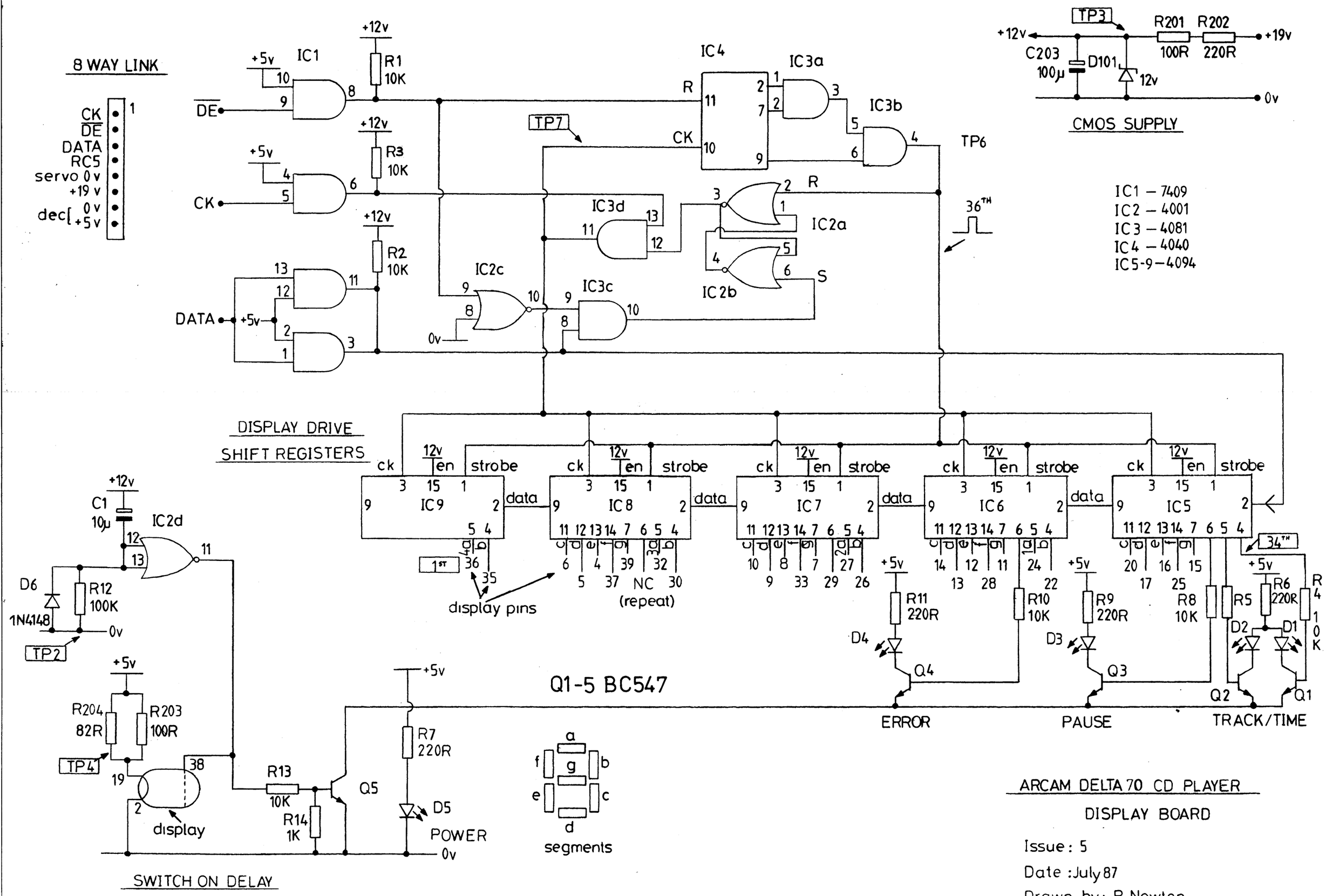

ARCAM DELTA 70 CD PLAYER

DISPLAY BOARD

Issue: 5

Date: July 87

Drawn by: P Newton

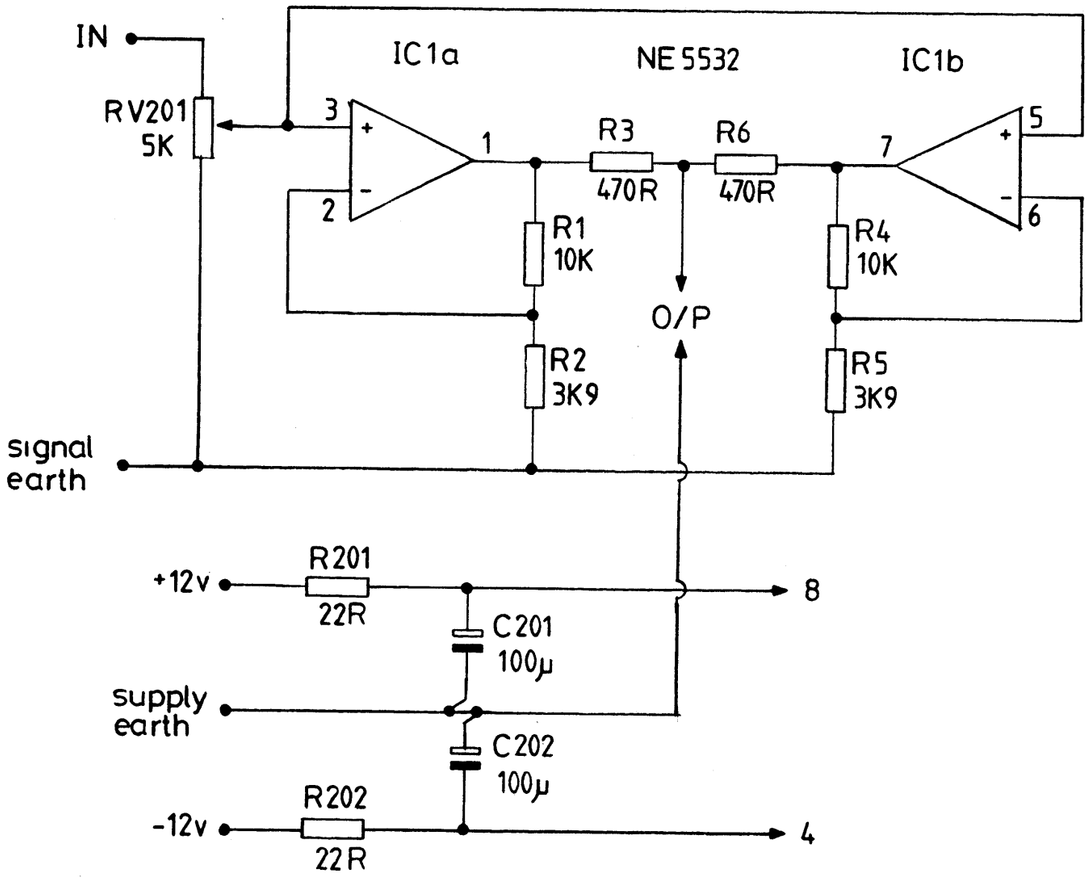

N.B.

ON ISSUE 3 HP BOARDS ONLY LEFT/RIGHT CHANNELS TRANSPOSED
FOR LHC COMPONENT REF
ADD 100 ie LHC = R104
RHC = R4

ARCAM DELTA 70 CD PLAYER

HEADPHONE BOARD

Issue: 3,4

Date :

Drawn by: P Newton

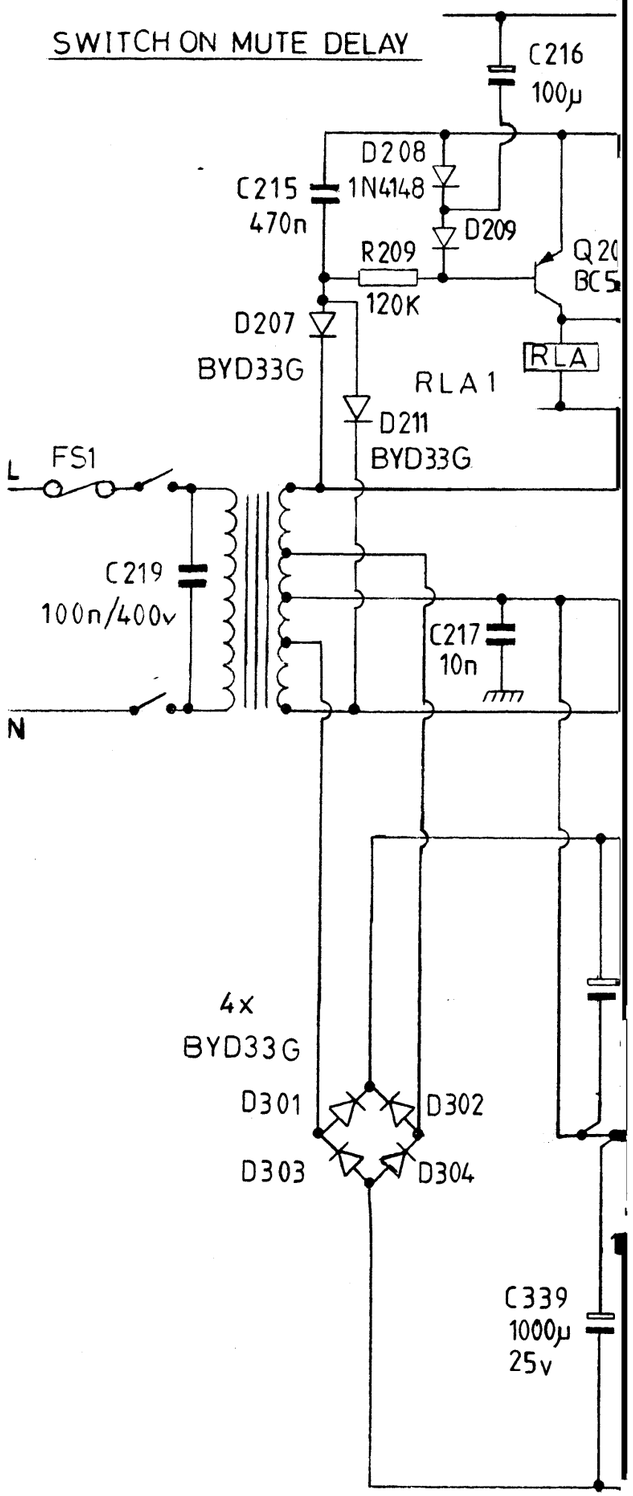
SWITCH ON MUTE DELAY
C216
100µ
D208
C215
470n
1N4148
D209
R209
120K
Q20
BC5
D207
BYD33G
RLA
RLA1
D211
BYD33G
L
FS1
C219
100n/400v
C217
10n
N
4x
BYD33G
D301
D302
D303
D304
C339
1000µ
25v

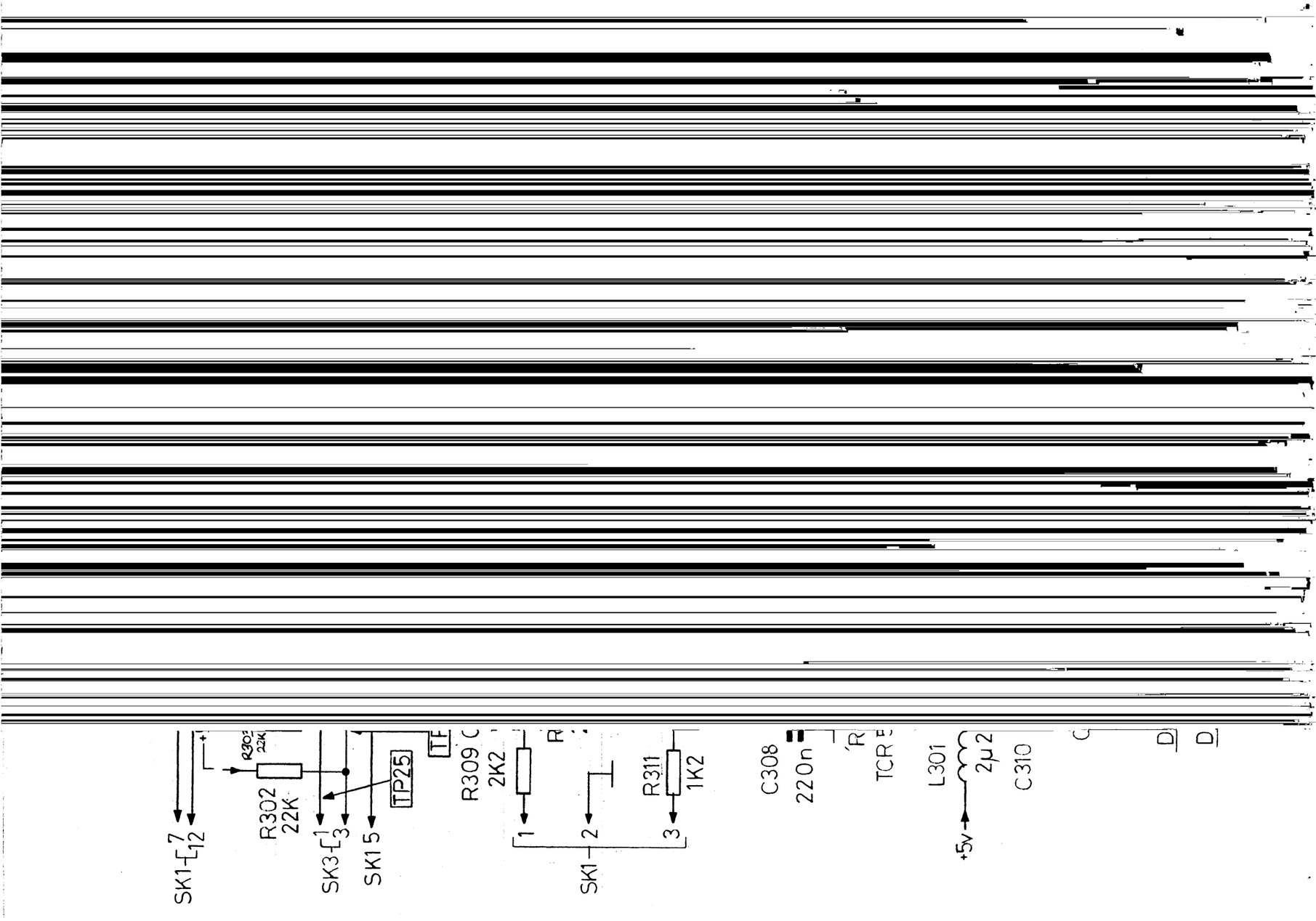
SK1
7
12
R302
22K
SK3
1
3
SK1 5
TP25
R309
2K2
SK1
1
2
3
R311
1K2
C308
220n
L301
2µ2
C310
+5v
D
D