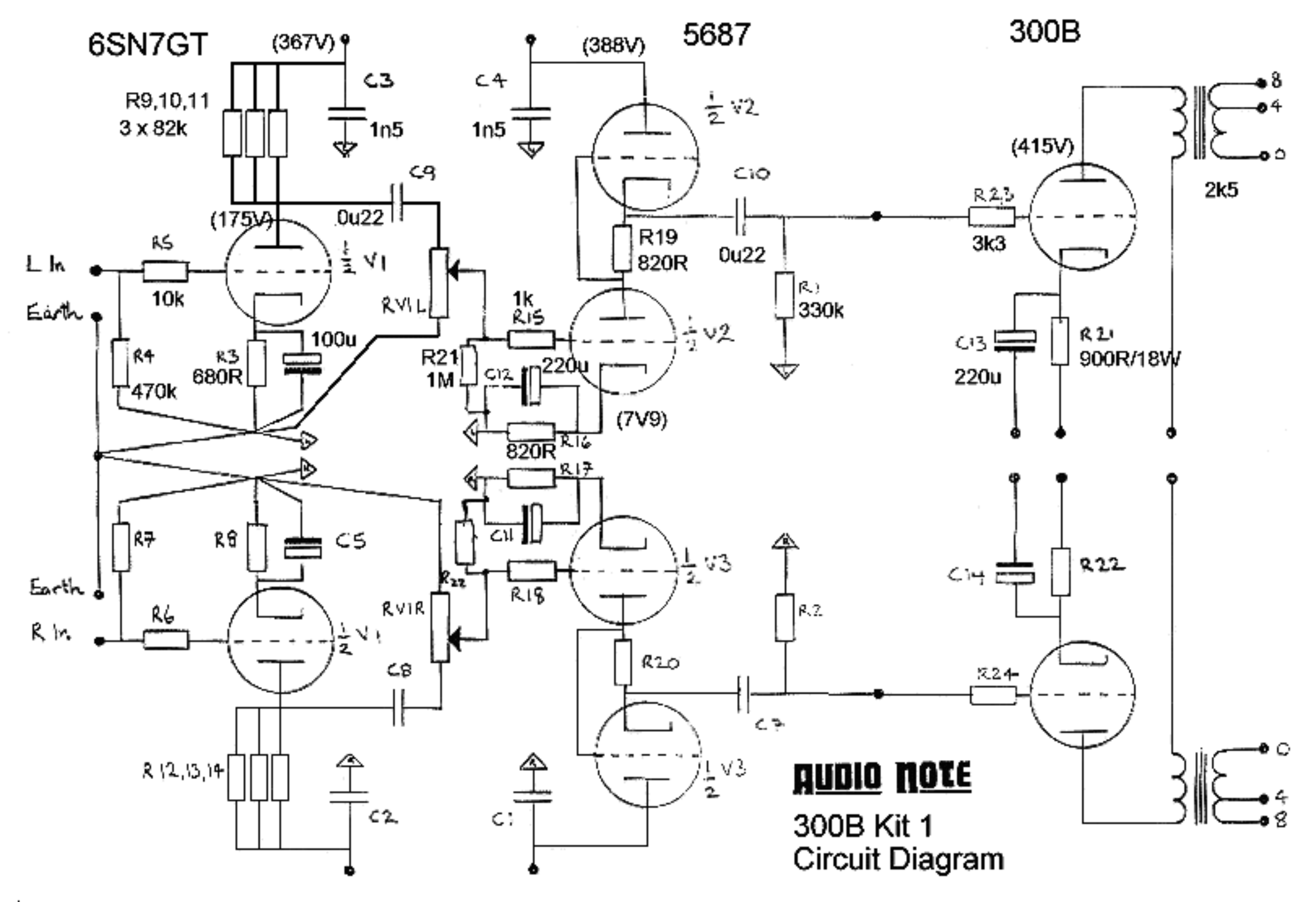
6SN7GT
(367V)
C3
1n5
R9,10,11
3 x 82k
C4
1n5
(388V)
5687
300B
½ V2
(415V)
C9
0u22
C10
0u22
R23
3k3
2k5
(175V)
R5
10k
L In
Earth
½ V1
RV1L
1k
R15
R19
820R
R1
330k
R4
470k
R3
680R
100u
R21
1M
C12
220u
½ V2
(7V9)
820R
R16
C13
220u
R21
900R/18W
R17
C11
R7
R8
C5
½ V3
C14
R22
Earth
R In
R6
½ V1
RV1R
R22
R18
R2
R20
R24
C8
C7
R12,13,14
C2
C1
½ V3
AUDIO NOTE
300B Kit 1
Circuit Diagram

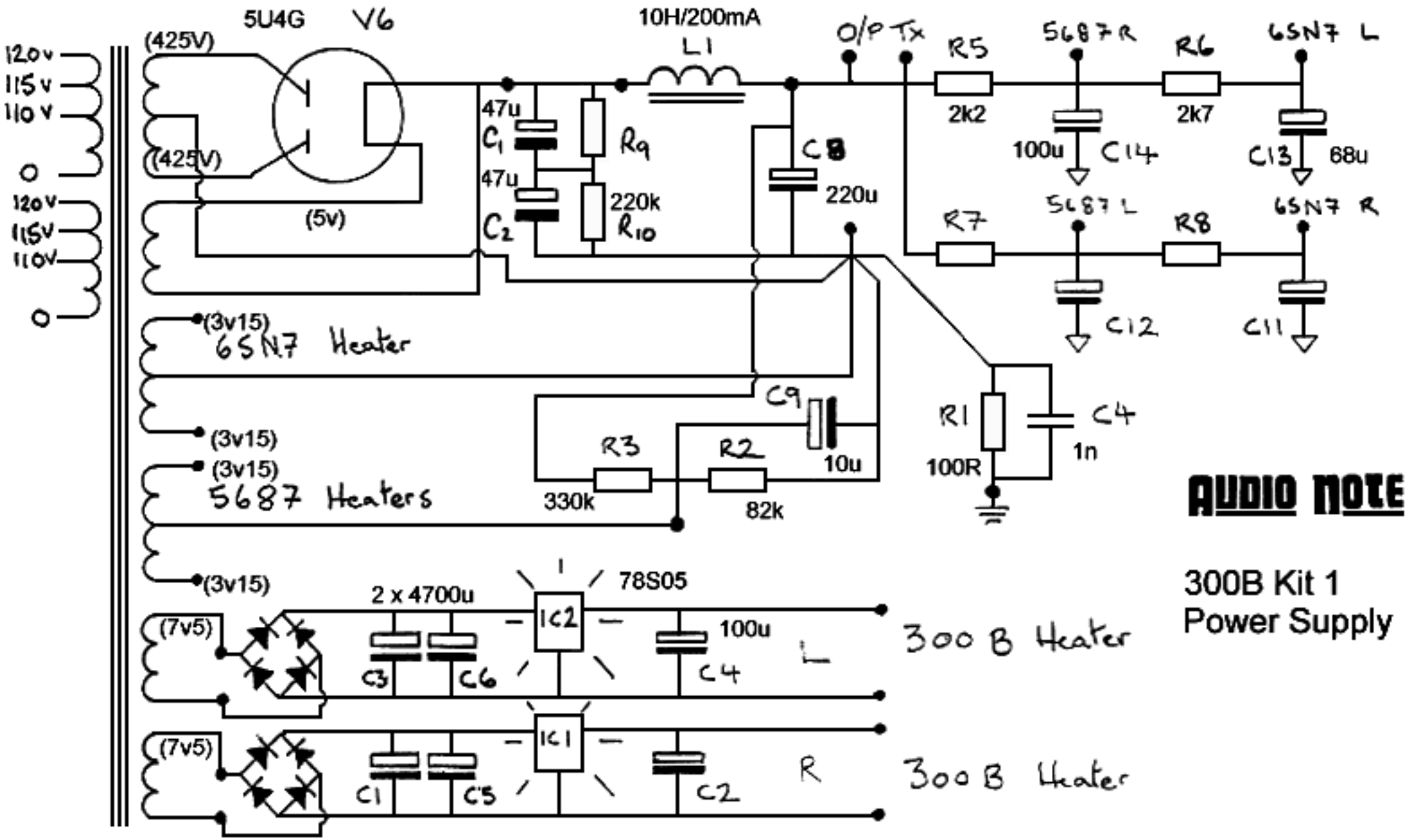
5U4G
V6
(425V)
(425V)
(5v)
120v
115v
110v
0
120v
115v
110v
0
10H/200mA
L1
47u
C1
47u
C2
R9
220k
R10
C8
220u
O/P Tx
R5
2k2
5687 R
100u
C14
R6
2k7
6SN7 L
C13
68u
R7
5687 L
C12
R8
6SN7 R
C11
(3v15)
6SN7 Heater
(3v15)
(3v15)
5687 Heaters
(3v15)
C9
10u
R3
330k
R2
82k
R1
100R
C4
1n
AUDIO NOTE
300B Kit 1
Power Supply
2 x 4700u
78S05
(7v5)
C3
C6
IC2
100u
C4
L
300 B Heater
(7v5)
C1
C5
IC1
C2
R
300 B Heater