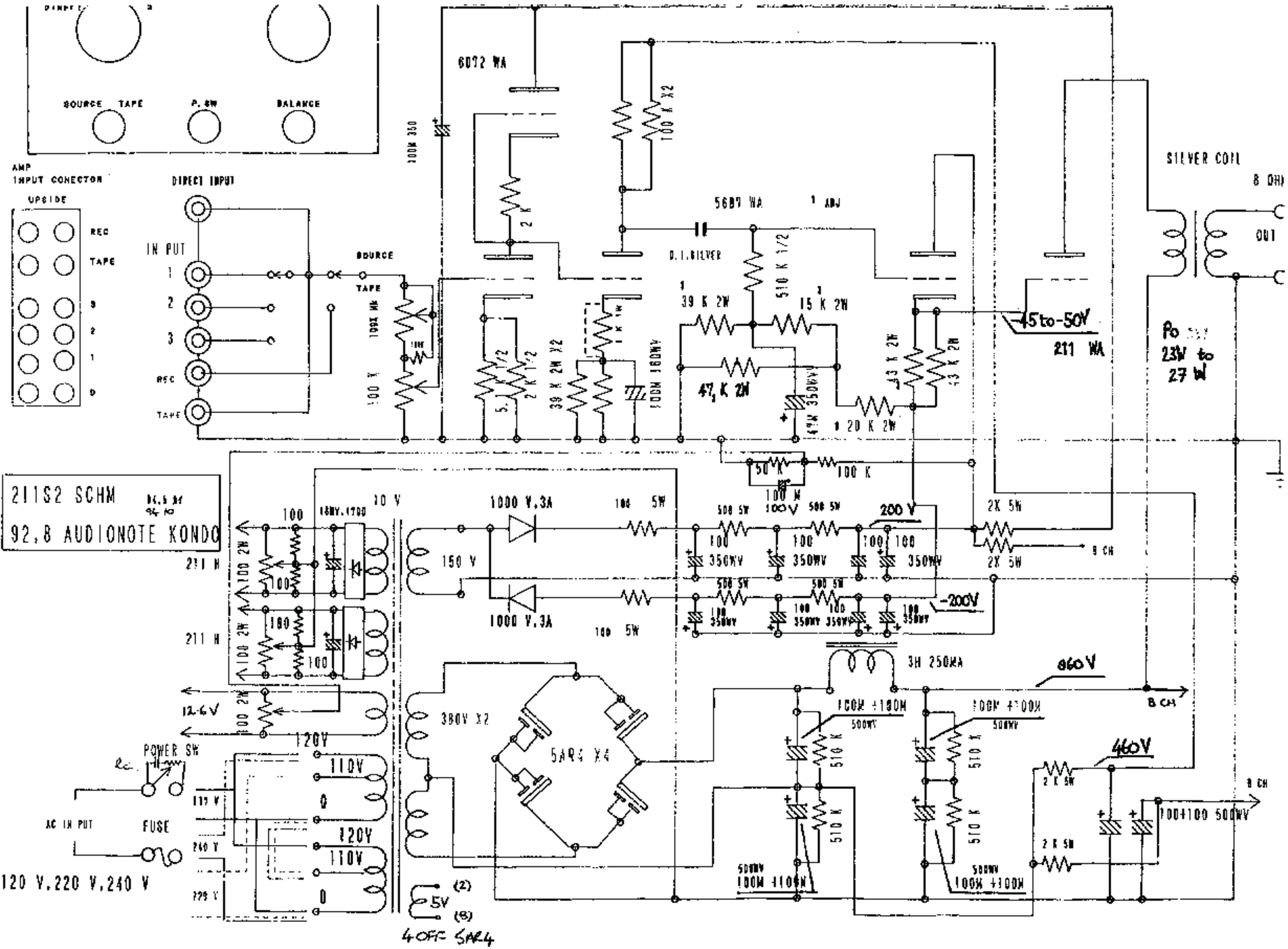

SOURCE TAPE
P. SW
BALANCE
AMP INPUT CONECTOR
UPSIDE
REC
TAPE
DIRECT INPUT
IN PUT
SOURCE
TAPE
6072 WA
100 K X2
5687 WA
D.I.SILVER
510 K 1/2
39 K 2W
15 K 2W
47 K 2W
20 K 2W
43 K 2W
-45to-50V
211 WA
SILVER COIL
8 OHM
OUT
Po
23W to
27 W
211S2 SCHM
92.8 AUDIONOTE KONDO
211 H
10 V
1000 V.3A
150 V
200 V
-200V
2X 5W
9 CH
3H 250MA
860V
8 CH
12.6V
380V X2
5AR4 X4
100M +100M
500WV
510 K
460V
100+100 500WV
POWER SW
AC IN PUT
FUSE
120 V.220 V.240 V
110V
120V
5V
4OFF 5AR4