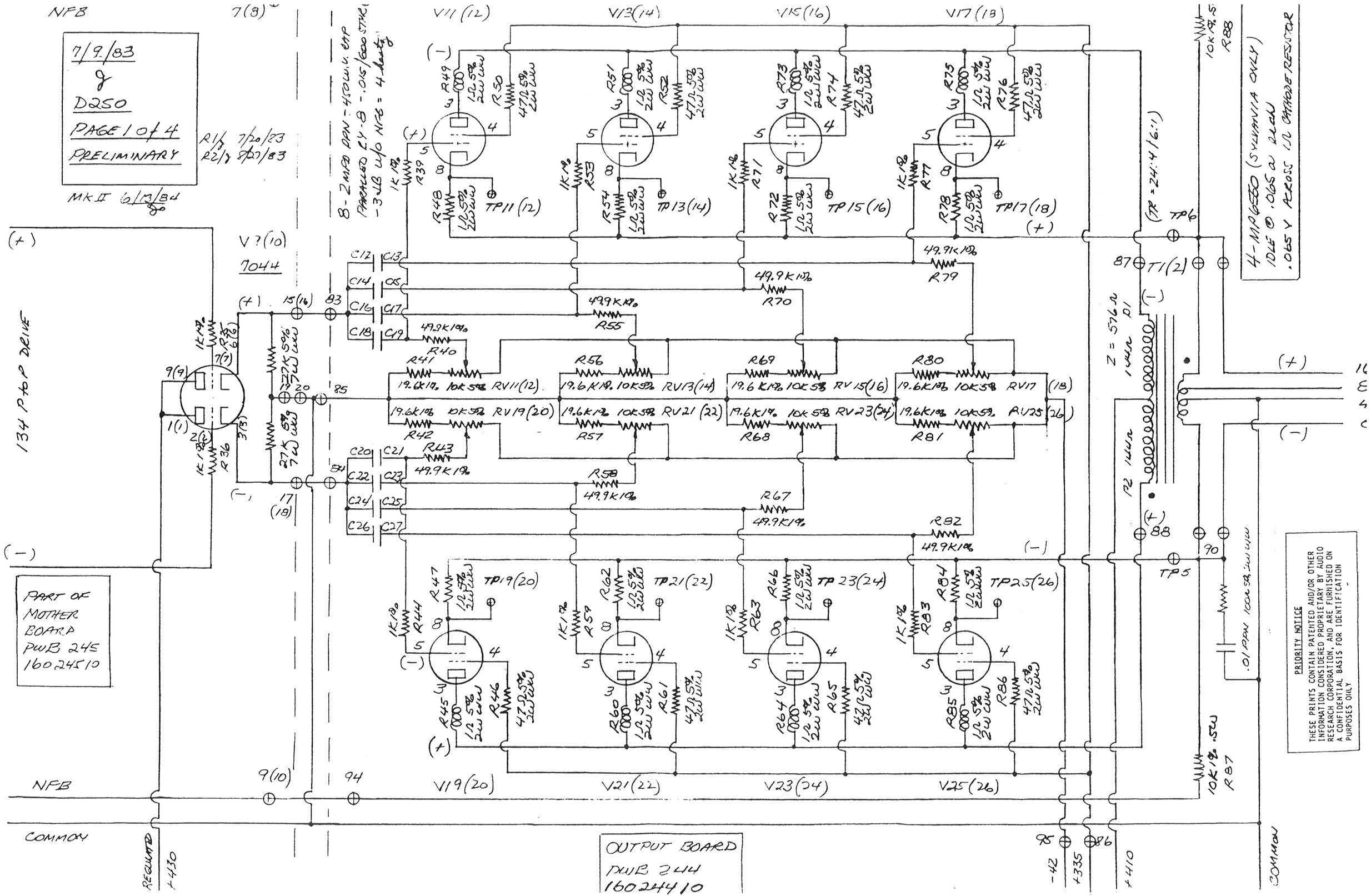
7/9/83
D250
PAGE 1 of 4
PRELIMINARY
R1/ 7/20/83
R2/ 8/27/83
MK II 6/13/84
NFB
8-2 MFD DPN-450 W.V. CAP
PARALLED EY-8 -.015/600 STYLE
-3 dB W/O NFB = 4 hertz
V11(12)
V13(14)
V15(16)
V17(18)
TP11(12)
TP13(14)
TP15(16)
TP17(18)
V7(10)
7044
134 PTOP DRIVE
4-MPG550 (SYLVANIA ONLY)
IDLE @ .065 a 2 LAN
.065 V ACROSS 1/2 CATHODE RESISTOR
(TR = 24:4/6:1)
TP6
T1(2)
Z = 576 Ω
1 WAN P1
P2 1 WAN
TP5
.01 PPM 100 V 2W WW
10K 1% .5W
R87
PART OF
MOTHER
BOARD
PWB 245
1602451O
V19(20)
V21(22)
V23(24)
V25(26)
NFB
COMMON
REGULATED
+430
-42
+335
+410
COMMON
OUTPUT BOARD
PWB 244
1602441O
PRIORITY NOTICE
THESE PRINTS CONTAIN PATENTED AND/OR OTHER INFORMATION CONSIDERED PROPRIETARY BY AUDIO RESEARCH CORPORATION, AND ARE FURNISHED ON A CONFIDENTIAL BASIS FOR IDENTIFICATION PURPOSES ONLY

MK II 6/13/84
J.
R1/J 7/20/83
R2/J 8/27/83

7/9/83
D250
PAGE 2 of 4
PRELIMINARY

RIGHT CHANNEL 2 NUMBERS (·)

(+) OR (-) INDICATES PHASE

PART OF MOTHER BOARD PWB 245 160 24510

NFB

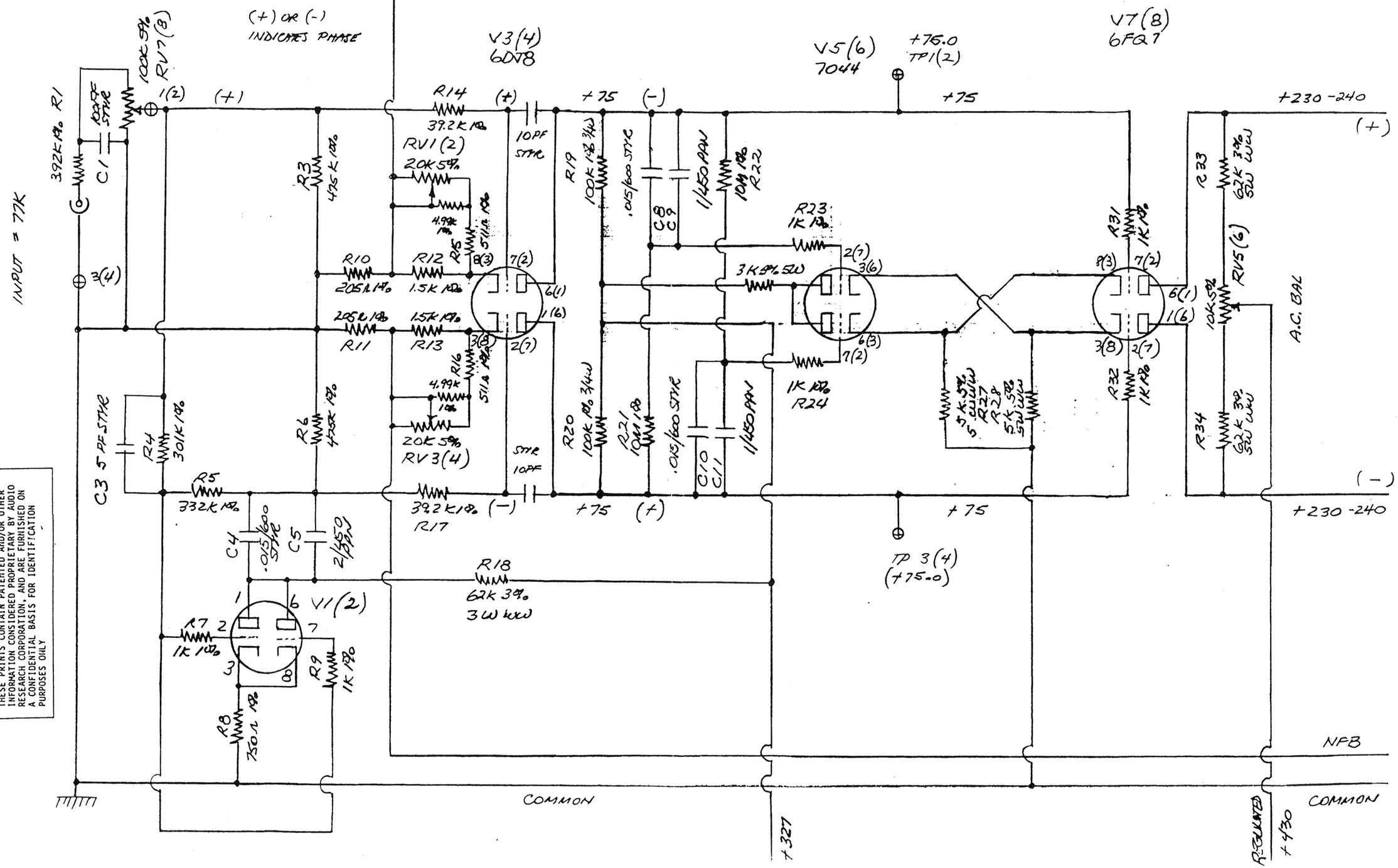

PRIORITY NOTICE

THESE PRINTS CONTAIN PATENTED AND/OR OTHER INFORMATION CONSIDERED PROPRIETARY BY AUDIO RESEARCH CORPORATION, AND ARE FURNISHED ON A CONFIDENTIAL BASIS FOR IDENTIFICATION PURPOSES ONLY

PRIORITY NOTICE

THESE PRINTS CONTAIN PATENTED AND/OR OTHER INFORMATION CONSIDERED PROPRIETARY BY AUDIO RESEARCH CORPORATION, AND ARE FURNISHED ON A CONFIDENTIAL BASIS FOR IDENTIFICATION PURPOSES ONLY

7/11/83
8
PAGE 3 of 4
PRELIMINARY
D260

R1/8 7/20/83
R2/8 8/31/83

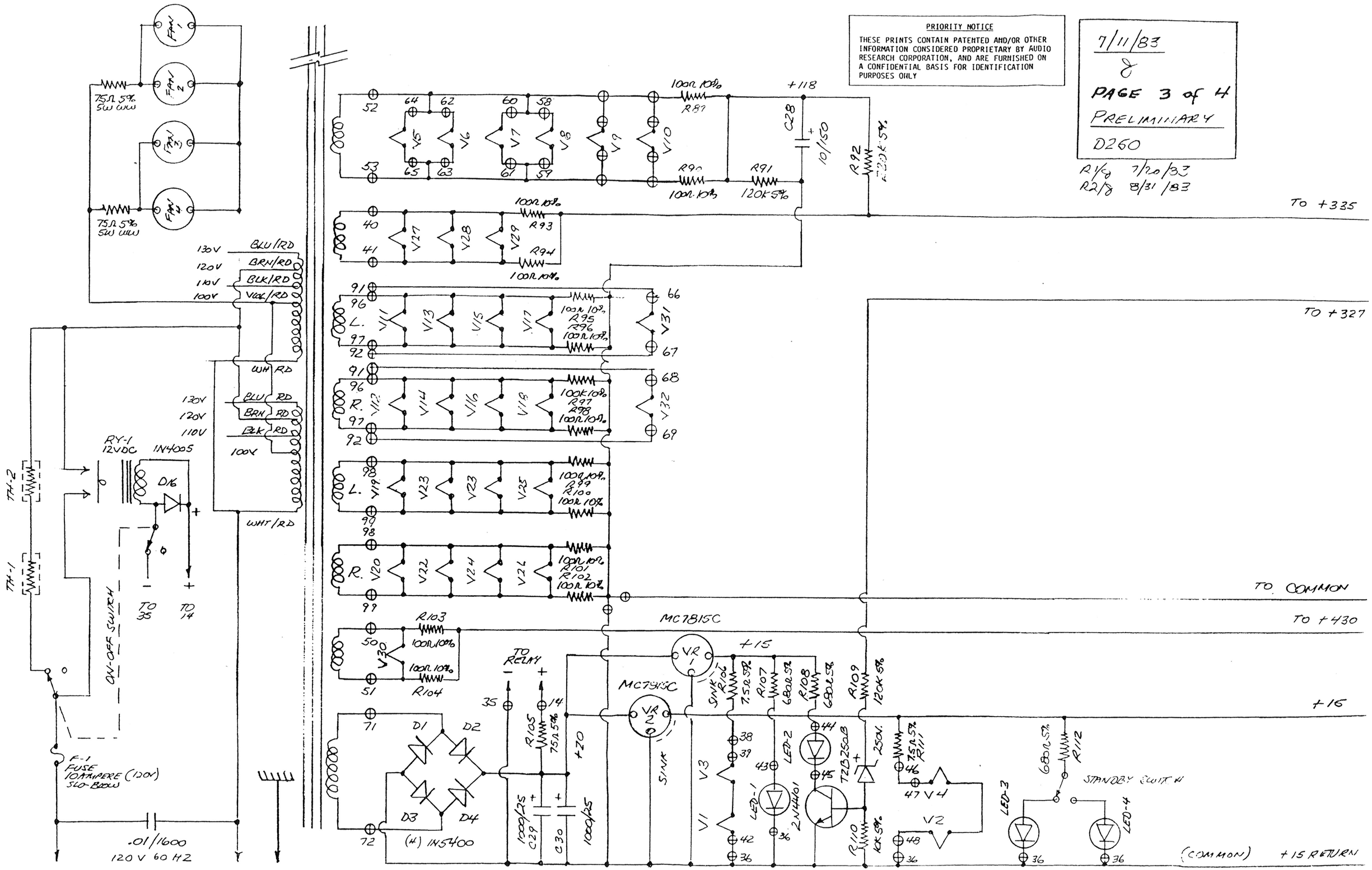

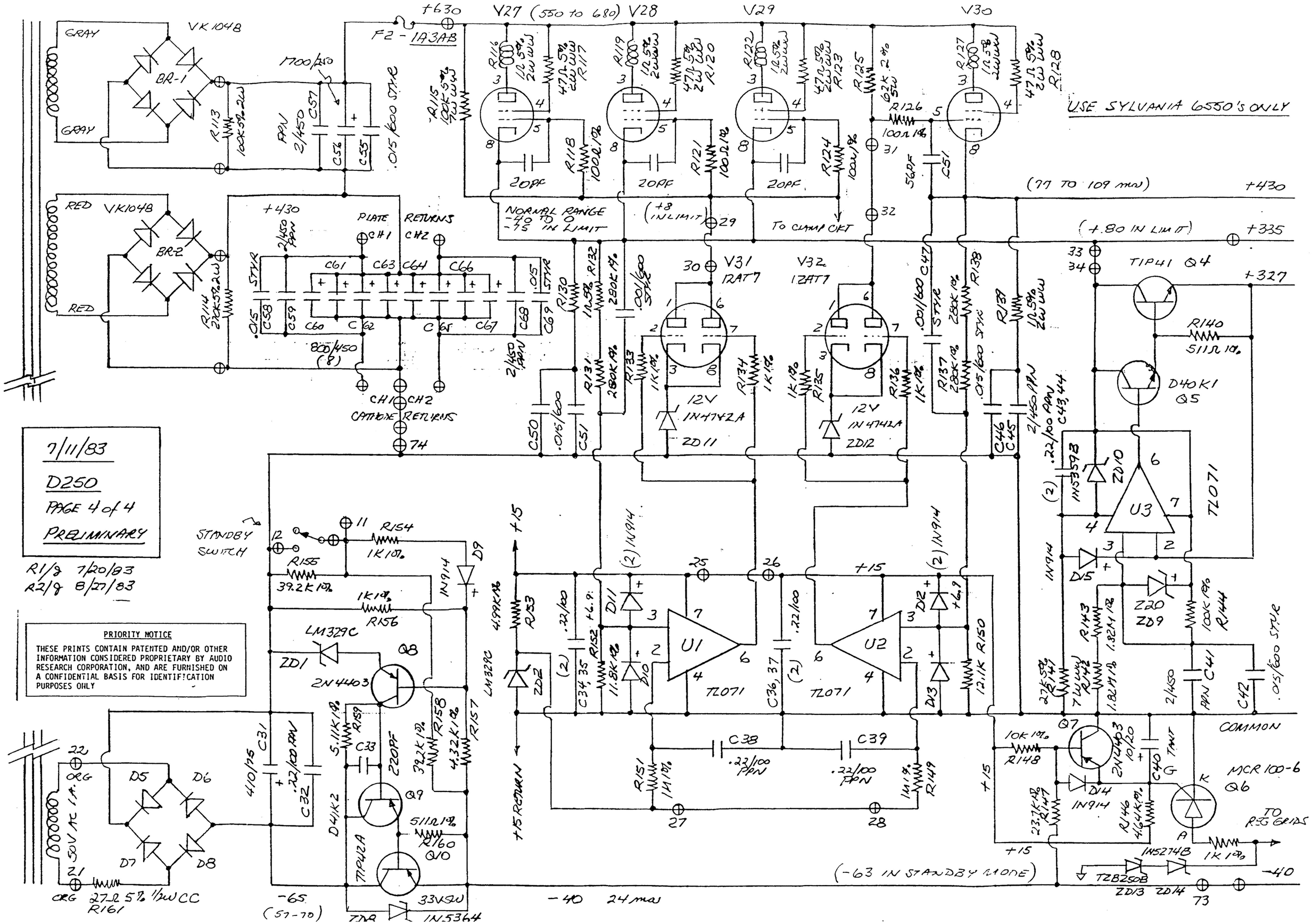

PRIORITY NOTICE

THESE PRINTS CONTAIN PATENTED AND/OR OTHER INFORMATION CONSIDERED PROPRIETARY BY AUDIO RESEARCH CORPORATION, AND ARE FURNISHED ON A CONFIDENTIAL BASIS FOR IDENTIFICATION PURPOSES ONLY