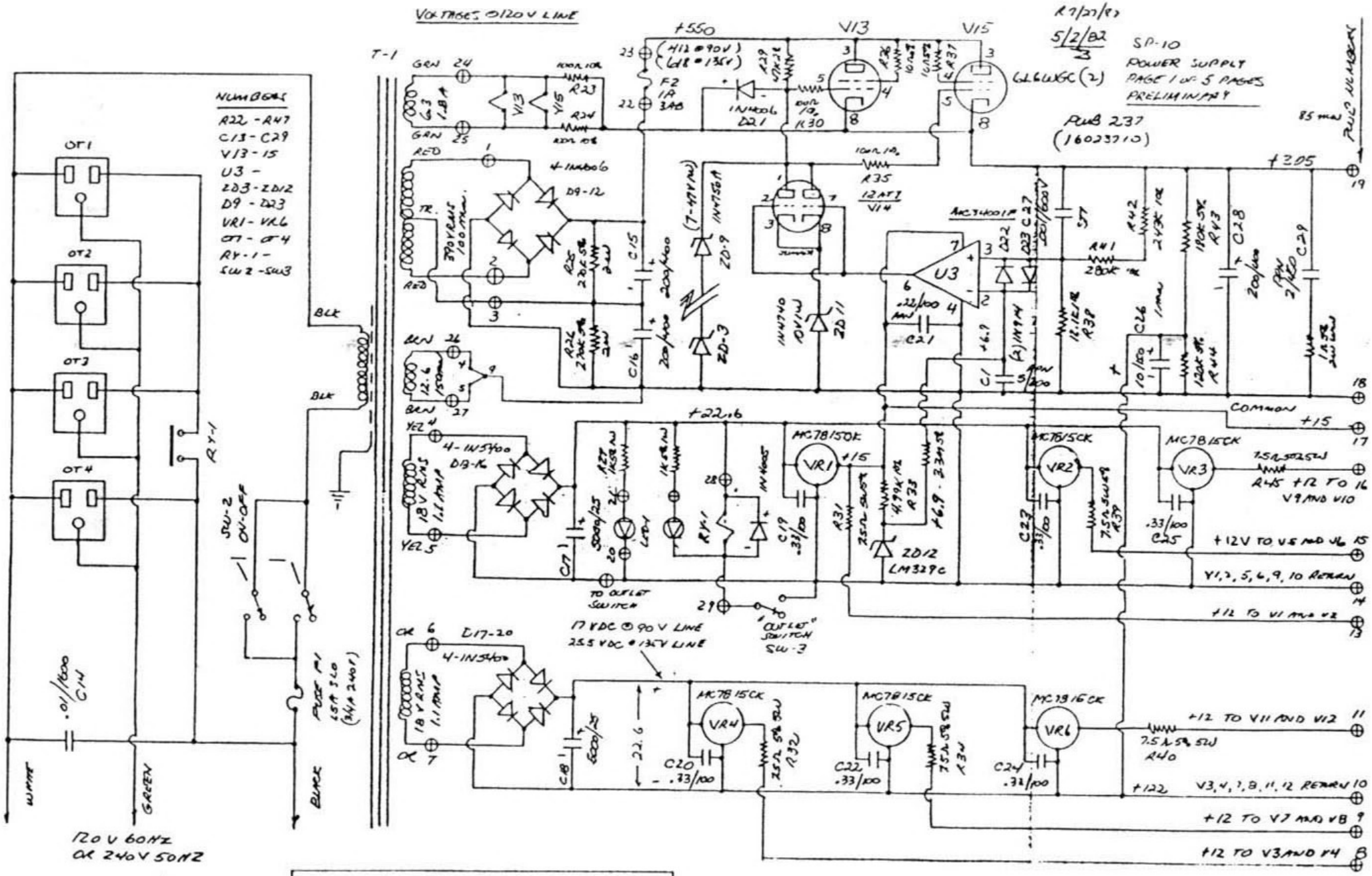

audio research corporation
6801 SHINGLE CREEK PARKWAY
MINNEAPOLIS, MINNESOTA 55430