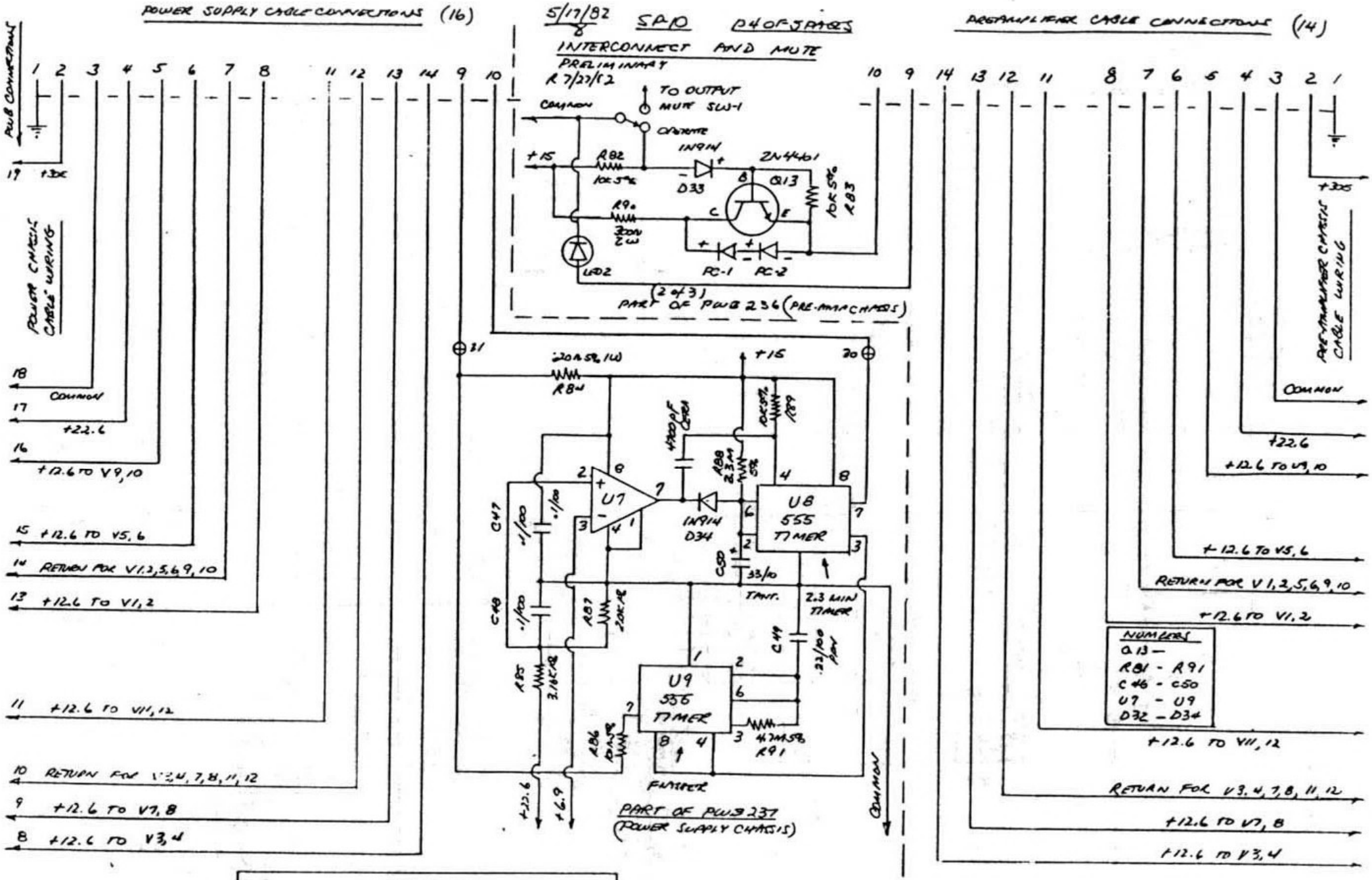

PRIORITY NOTICE

THESE PRINTS CONTAIN PATENTED AND/OR OTHER INFORMATION CONSIDERED PROPRIETARY BY AUDIO RESEARCH CORPORATION, AND ARE FURNISHED ON A CONFIDENTIAL BASIS FOR IDENTIFICATION PURPOSES ONLY

audio research corporation
6801 SHINGLE CREEK PARKWAY
MINNEAPOLIS, MINNESOTA 55430