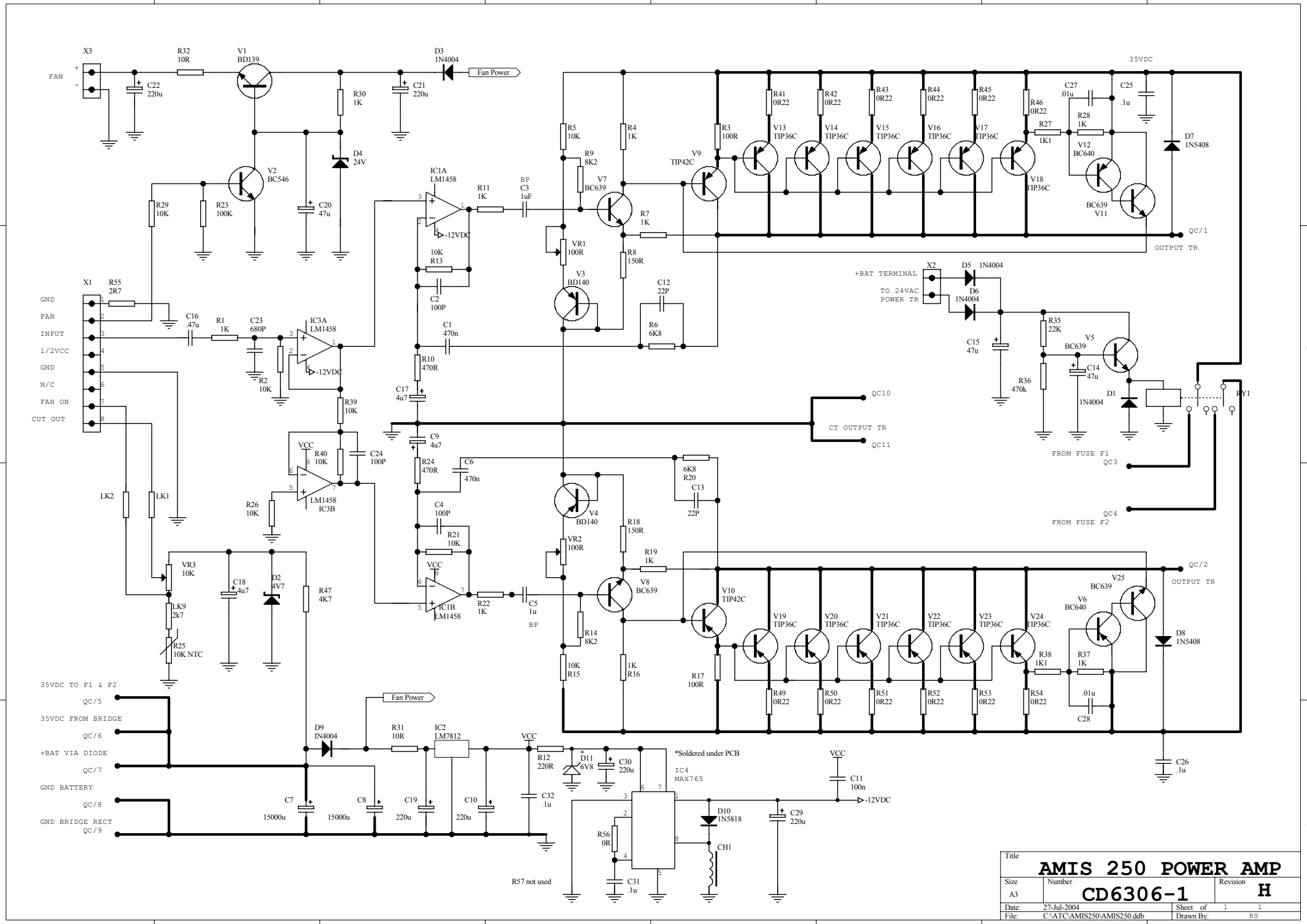

Title	AMIS 250 POWER AMP	
Size A3	Number CD6306-1	Revision H
Date: 27-Jul-2004	Sheet of 1 1	
File: C:\ATC\AMIS250\AMIS250.ddb	Drawn By: RS	