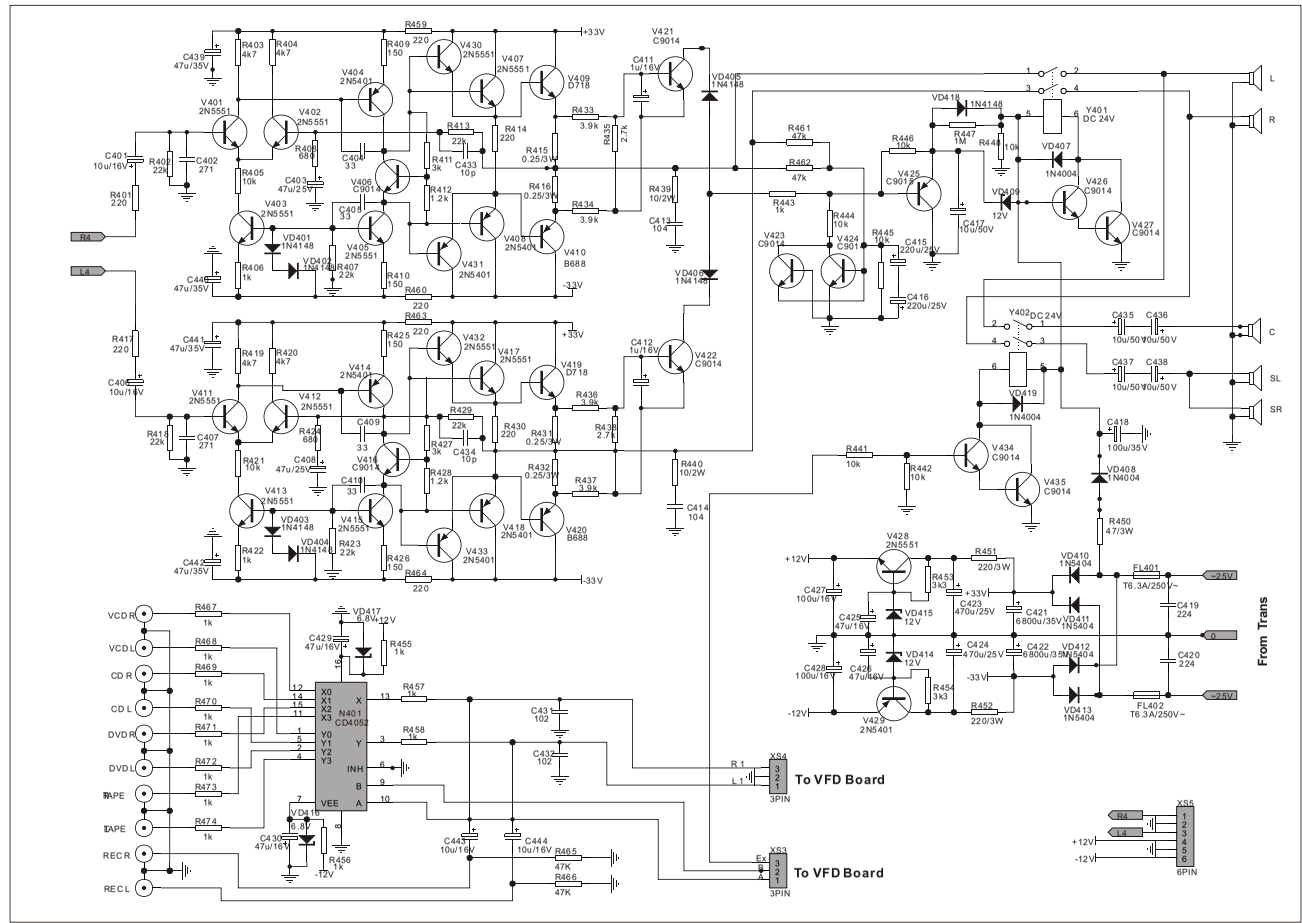
+33V
-33V
R4
L4
L
R
C
SL
SR
Y401 DC 24V
Y402 DC 24V
From Trans
~25V
0
~25V
+12V
-12V
VCD R
VCD L
CD R
CD L
DVD R
DVD L
TAPE
TAPE
RECR
RECL
N401 CD4052
To VFD Board
To VFD Board
XS4 3PIN
XS3 3PIN
XS5 6PIN