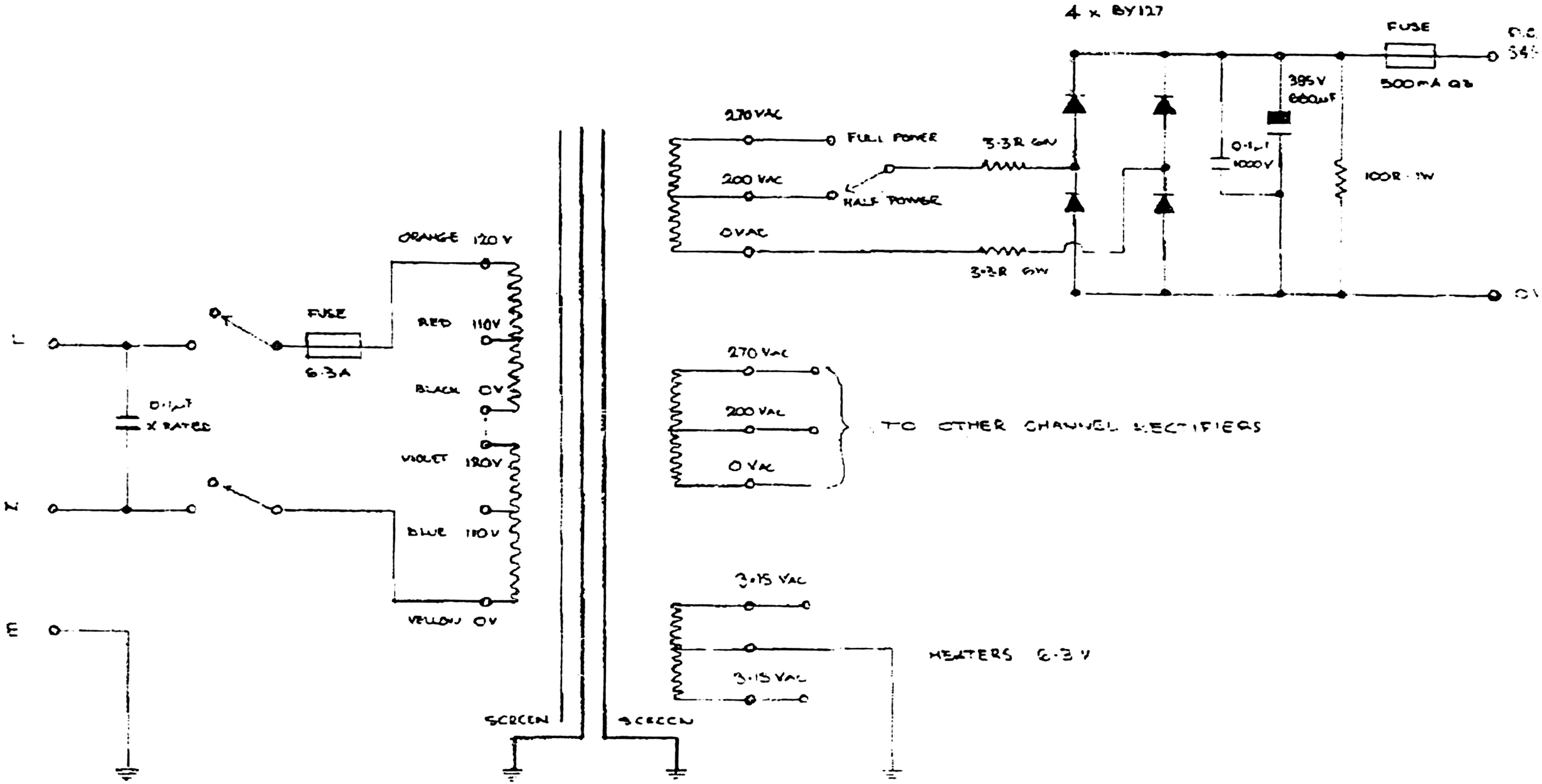

BEARD AUDIO R35 POWER SUPPLY

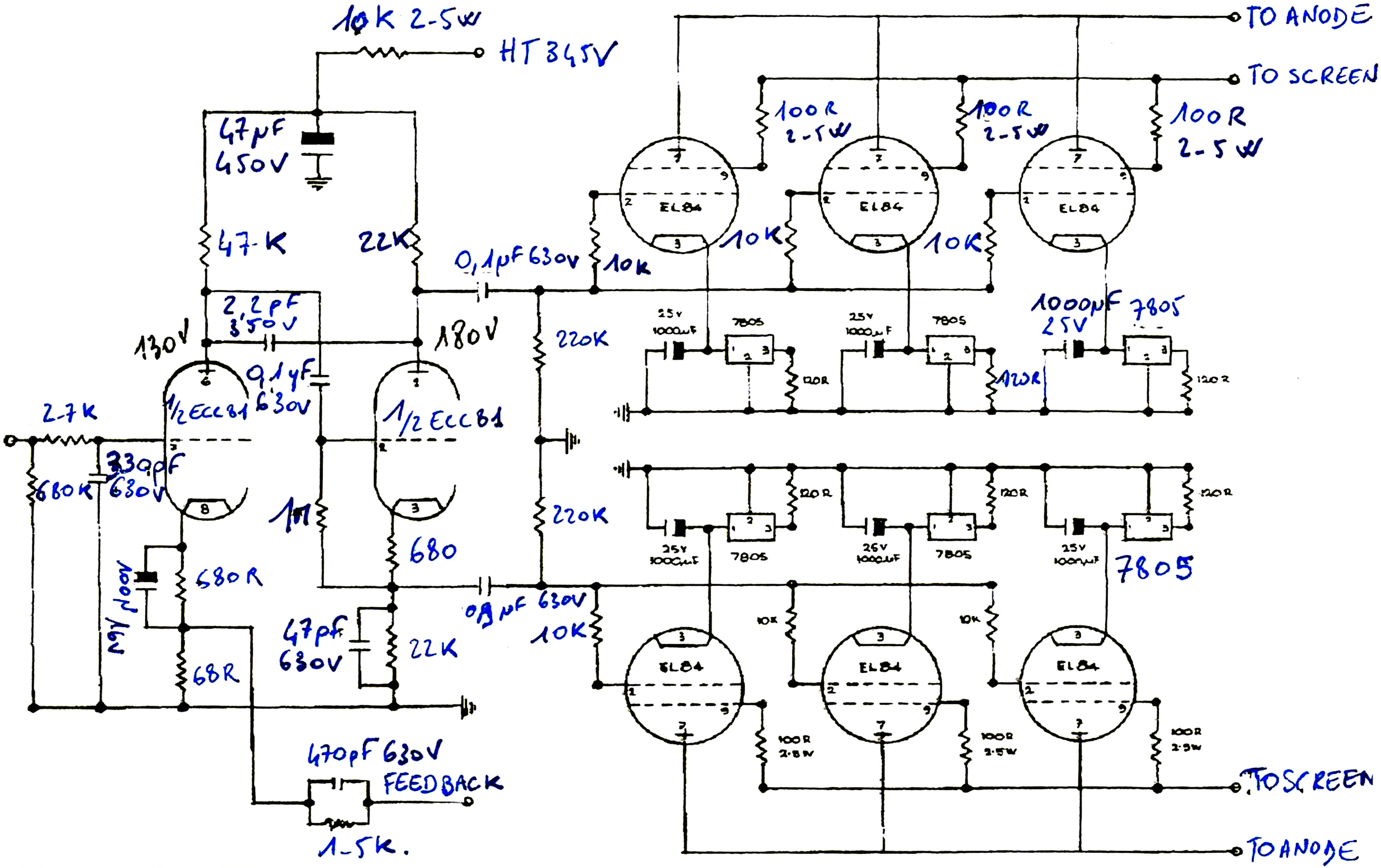

BEARD AUDIO P.35 ONE CHANNEL