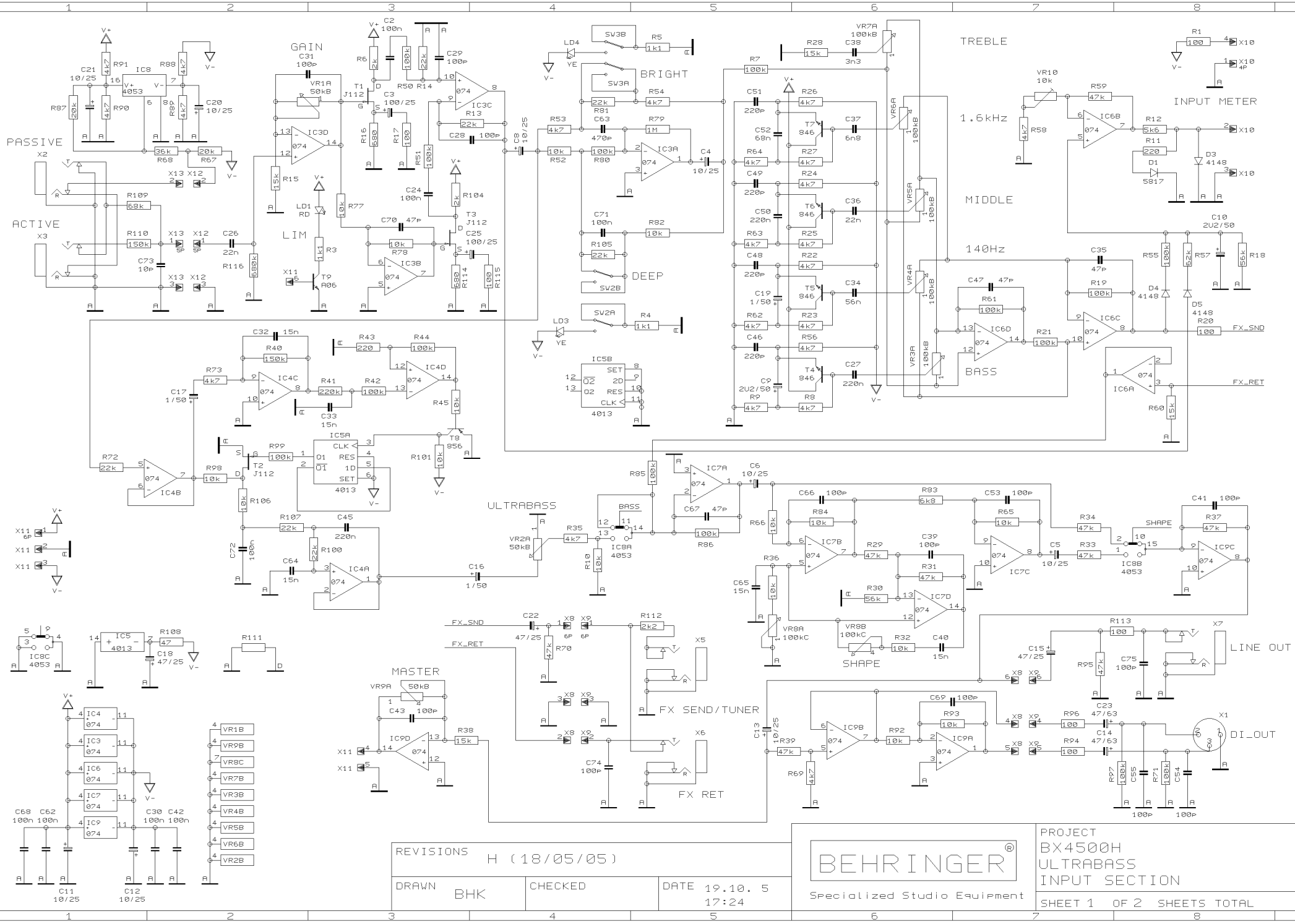
PASSIVE
ACTIVE
GAIN
LIM
BRIGHT
DEEP
TREBLE
1.6kHz
MIDDLE
140Hz
BASS
INPUT METER
ULTRABASS
SHAPE
MASTER
FX SEND/TUNER
FX RET
LINE OUT
DI_OUT
FX_SND
FX_RET
REVISIONS H (18/05/05)
DRAWN BHK
CHECKED
DATE 19.10. 5 17:24
BEHRINGER®
Specialized Studio Equipment
PROJECT
BX4500H
ULTRABASS
INPUT SECTION
SHEET 1 OF 2 SHEETS TOTAL

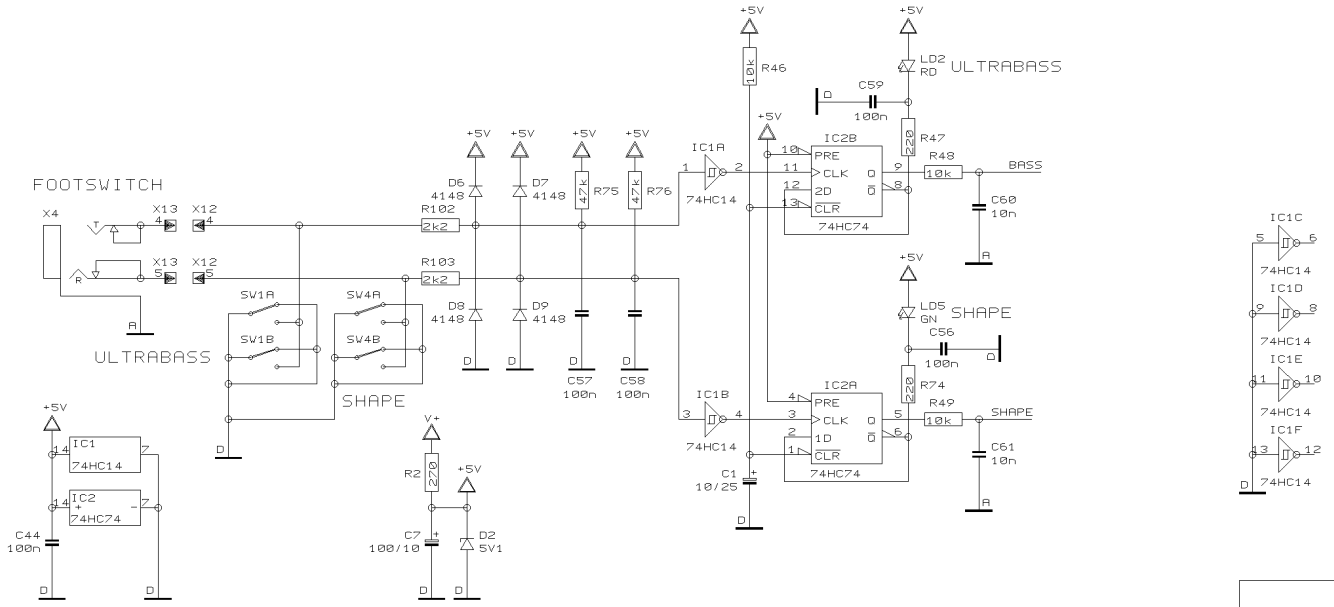

REVISIONS H			
DRAWN BHK	CHECKED	DATE 19.10. 5 17:24	

BEHRINGER®
Specialized Studio Equipment

PROJECT
BX4500H
ULTRABASS
FOOTSWITCH

SHEET 2 OF 2 SHEETS TOTAL