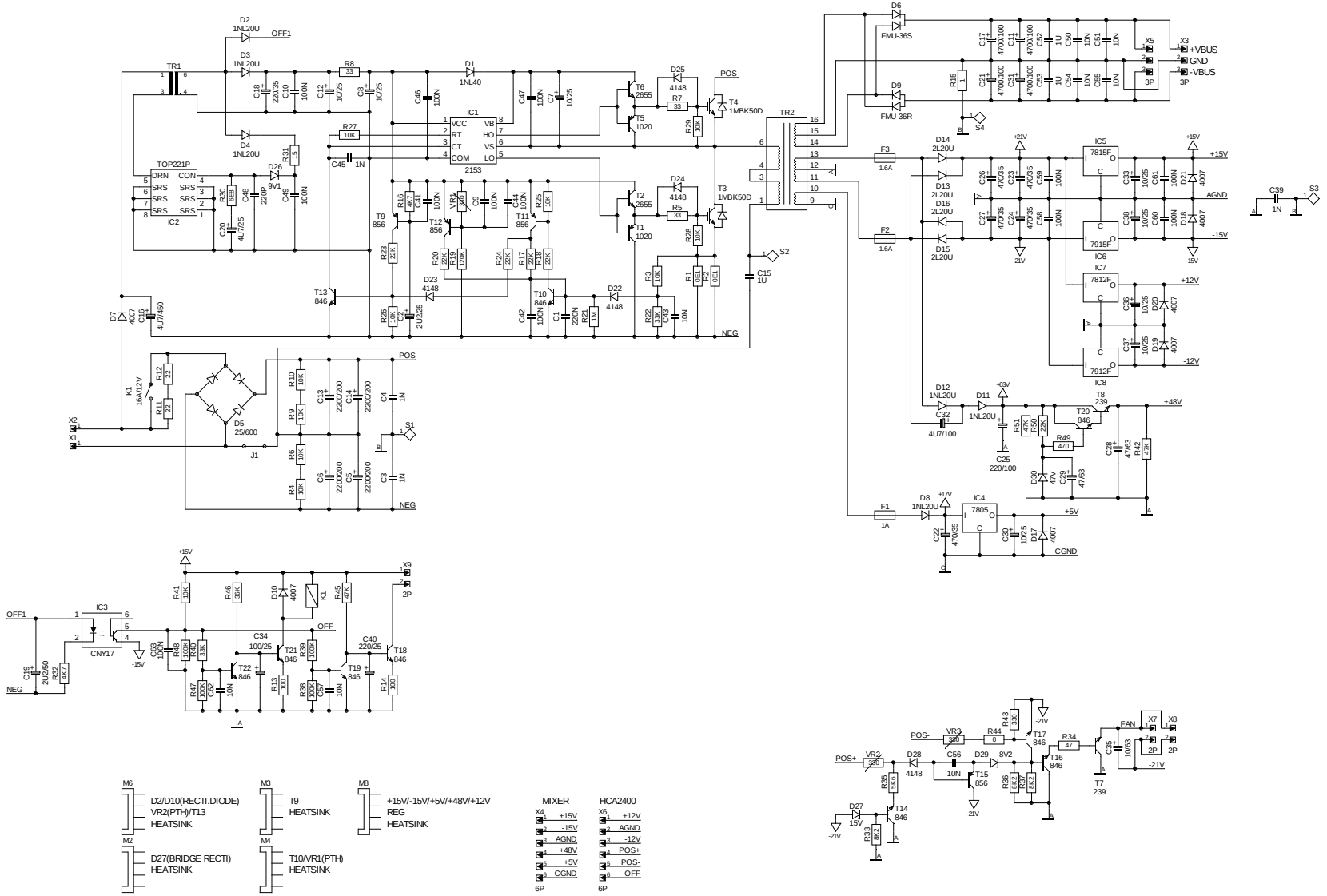

ALL INFORMATION (INCLUDING DRAWINGS AND DIAGRAMS) CONTAINED IN THIS DOCUMENT IS THE PROPERTY OF BEHRINGER. ADDRESSEES WHOM THE INFORMATION IS CONFIDED TO SHALL MAINTAIN THE INFORMATION IN CONFIDENCE AND SHALL NOT RELEASE IT TO ANY UNAUTHORIZED THIRD PARTIES (EXCEPT UNDER ATTORNEY CLIENT PRIVILEGE OR UNDER APPROPRIATE CONFIDENTIALITY AGREEMENTS). ANY UNAUTHORIZED DISCLOSURE, USE, APPLICATION OR ANY OTHER DEALINGS IN THE INFORMATION SHALL RESULT IN CIVIL AND/OR (WHERE APPLICABLE) CRIMINAL LIABILITIES AND PENALTIES.

REV	CHANGES	DATE	INIT
C	MODIFIED	151205	SASA
B	MODIFIED	190405	SASA
A	CREATED	201004	LR

	DATE	NAME
DRWN	20/10/04	L.RAMOS
CHKD		
APPR		

SPS1000
SCHEMATIC
MAIN

SHEET 1 OF 1

FILE: sps1000_2

PDF created with pdfFactory Pro trial version www.pdffactory.com