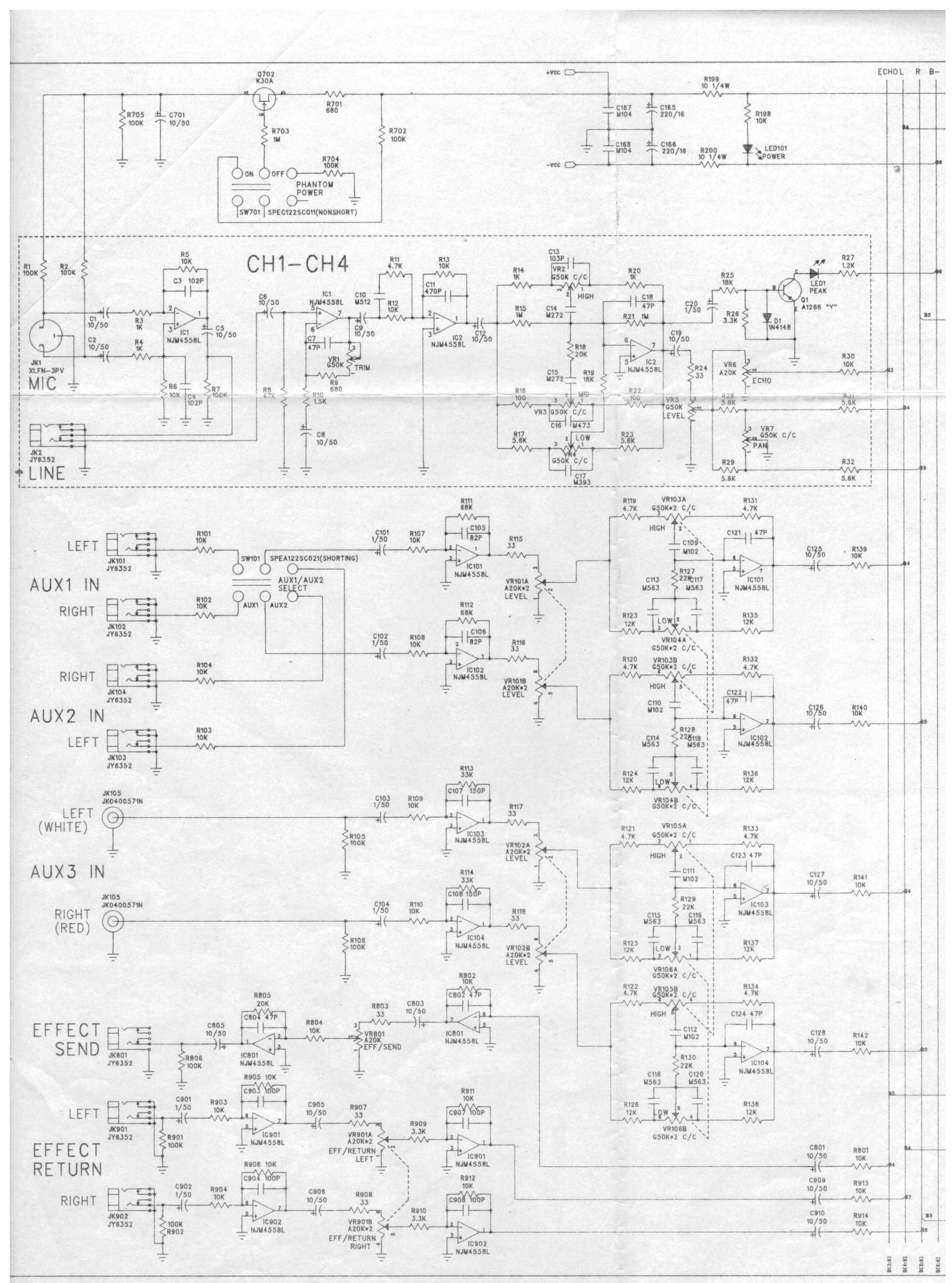
CH1-CH4
MIC
LINE
JK1 XLFN-3PV
JK2 JY6352
Q702 K30A
PHANTOM POWER
SW701 SPEC122SC011(NONSHORT)
+VCC
-VCC
ECHO L R B-
LED101 POWER
LED1 PEAK
Q1 A1266 "Y"
D1 1N4148
VR6 A20K ECHO
VR7 G50K C/C PAN
VR5 G50K LEVEL
VR1 G50K TRIM
VR2 G50K C/C HIGH
VR3 G50K C/C MID
VR4 G50K C/C LOW
IC1 NJM4558L
IC2 NJM4558L
AUX1 IN
LEFT
RIGHT
JK101 JY6352
JK102 JY6352
JK104 JY6352
JK103 JY6352
SW101 SPEA122SC021(SHORTING)
AUX1/AUX2 SELECT
AUX1
AUX2
AUX2 IN
JK105 JK0400571N
LEFT (WHITE)
RIGHT (RED)
AUX3 IN
EFFECT SEND
JK801 JY6352
EFFECT RETURN
JK901 JY6352
JK902 JY6352
VR801 A20K EFF/SEND
VR901A A20K*2 EFF/RETURN LEFT
VR901B A20K*2 EFF/RETURN RIGHT
VR101A A20K*2 LEVEL
VR101B A20K*2 LEVEL
VR102A A20K*2 LEVEL
VR102B A20K*2 LEVEL
VR103A G50K*2 C/C
VR103B G50K*2 C/C
VR104A G50K*2 C/C
VR104B G50K*2 C/C
VR105A G50K*2 C/C
VR105B G50K*2 C/C
VR106A G50K*2 C/C
VR106B G50K*2 C/C
IC101 NJM4558L
IC102 NJM4558L
IC103 NJM4558L
IC104 NJM4558L
IC801 NJM4558L
IC901 NJM4558L
IC902 NJM4558L

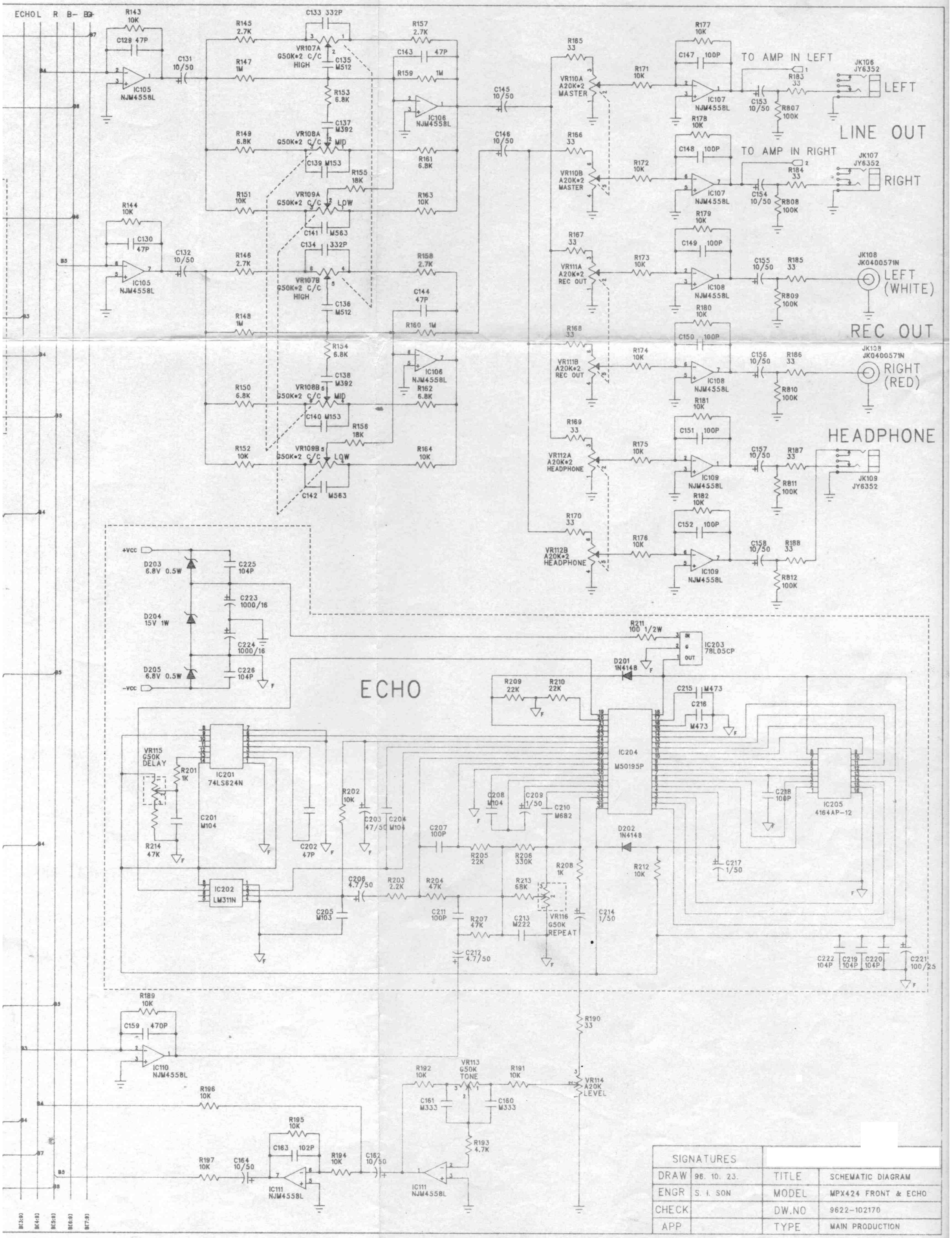

SIGNATURES			
DRAW	96. 10. 23.	TITLE	SCHEMATIC DIAGRAM
ENGR	S. I. SON	MODEL	MPX424 FRONT & ECHO
CHECK		DW.NO	9622-102170
APP		TYPE	MAIN PRODUCTION

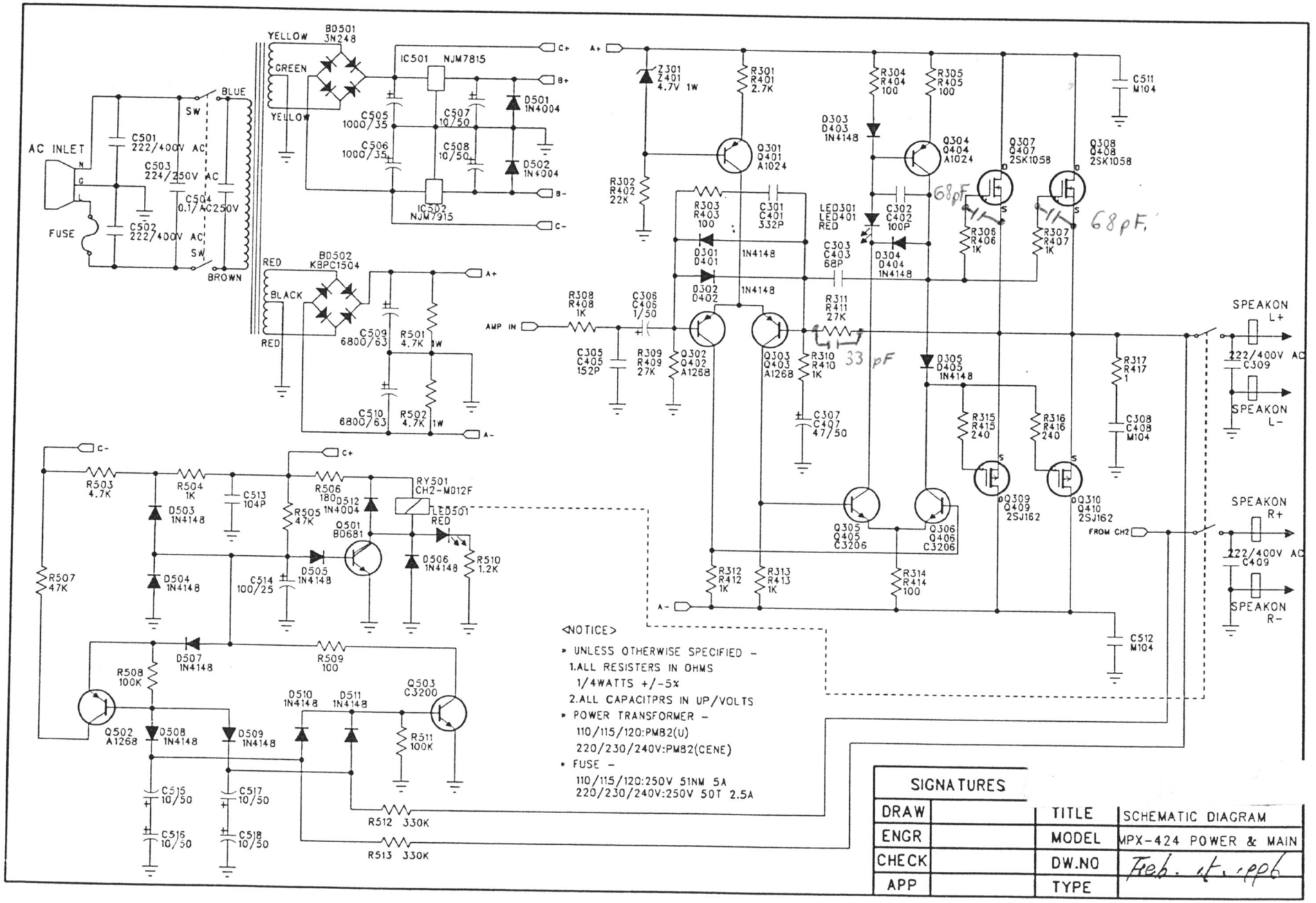
AC INLET
FUSE
C501 222/400V AC
C502 222/400V AC
C503 224/250V AC
C504 0.1/AC250V
SW
BLUE
BROWN
YELLOW
GREEN
YELLOW
B0501 3N248
IC501 NJM7815
IC502 NJM7915
C505 1000/35
C506 1000/35
C507 10/50
C508 10/50
D501 1N4004
D502 1N4004
C+
B+
B-
C-
RED
BLACK
RED
B0502 KBPC1504
C509 6800/63
C510 6800/63
R501 4.7K 1W
R502 4.7K 1W
A+
A-
R503 4.7K
R504 1K
C513 104P
R506 180
D512 1N4004
RY501 CH2-M012F
LED501 RED
D503 1N4148
R505 47K
Q501 B0681
R510 1.2K
R507 47K
D504 1N4148
C514 100/25
D505 1N4148
D506 1N4148
D507 1N4148
R509 100
R508 100K
Q502 A1268
D508 1N4148
D509 1N4148
D510 1N4148
D511 1N4148
Q503 C3200
R511 100K
C515 10/50
C516 10/50
C517 10/50
C518 10/50
R512 330K
R513 330K
Z301 Z401 4.7V 1W
R302 R402 22K
R301 R401 2.7K
Q301 Q401 A1024
R303 R403 100
C301 C401 332P
D301 D401 1N4148
D302 D402 1N4148
AMP IN
R308 R408 1K
C306 C406 1/50
C305 C405 152P
R309 R409 27K
Q302 Q402 A1268
Q303 Q403 A1268
R310 R410 1K
C307 C407 47/50
R311 R411 27K
33 pF
R304 R404 100
R305 R405 100
D303 D403 1N4148
Q304 Q404 A1024
LED301 LED401 RED
C302 C402 100P
68pF
C303 C403 68P
D304 D404 1N4148
Q307 Q407 2SK1058
Q308 Q408 2SK1058
R306 R406 1K
R307 R407 1K
68pF
C511 M104
D305 D405 1N4148
R315 R415 240
R316 R416 240
Q309 Q409 2SJ162
Q310 Q410 2SJ162
R317 R417 1
C308 C408 M104
Q305 Q405 C3206
Q306 Q406 C3206
FROM CH2
R312 R412 1K
R313 R413 1K
R314 R414 100
C512 M104
SPEAKON L+
222/400V AC C309
SPEAKON L-
SPEAKON R+
222/400V AC C409
SPEAKON R-
<NOTICE>
• UNLESS OTHERWISE SPECIFIED -
1.ALL RESISTERS IN OHMS
1/4WATTS +/-5%
2.ALL CAPACITPRS IN UP/VOLTS
• POWER TRANSFORMER -
110/115/120:PM82(U)
220/230/240V:PM82(CENE)
• FUSE -
110/115/120:250V 51NM 5A
220/230/240V:250V 50T 2.5A
SIGNATURES
DRAW
ENGR
CHECK
APP
TITLE
SCHEMATIC DIAGRAM
MODEL
MPX-424 POWER & MAIN
DW.NO
TYPE