EA-2100

The 6LF6 output tubes have become extremely expensive and hard to find. The Svetlana EL509 is similar in characteristics, and with a substantial amount of work the EA-2100 can be changed to take these tubes. The socket must be changed, requiring a hole to be punched through the circuit board and the new socket to be mounted in the hole. All four tubes must be changed if this modification is attempted.

Failure prone parts in this amplifier are the triacs, 10-ohm 10 W soft-start resistor, and the power MOSFETs. These failures occurred early on, as the early MOSFETs had a poorer quality oxide than newer MOSFETs. For replacement purposes, see the schematic for the EA-2101 for newer types of MOSFETs. The TR6421M triac should be used in place of the obsolete SC250M3. Only two (one on each heat sink) of the IRF452s should be used (not four) if the MTM7N45s need to be replaced. The gate diodes and resistors are usually destroyed when the MOSFETs blow. A drop in power line voltage that sometimes occurs in a storm can destroy these parts. The added parts in the oscillator section shown in the schematic for the EA-2101: EC103B SCR, 2N5210 transistor, zener diodes, and other parts associated with these provides protection against low line voltage. These parts could be added to the EA-2100 if this is a recurring problem.

Early versions of this amp used two A114M (600V) diodes in series for each leg of the bridge instead of the single MR818 (1000V) diodes in the bridge rectifiers. These were prone to failure and a mod is to place 100pF-500V capacitors across each diode (16 in all required). If the change is made to single MR818s, heat sinks are required.

Bias measurements are taken across each of the 10-ohm, 2 W resistors that are located along the top edge of the audio boards. The correct voltage is 100mV.

Certain service to the audio boards requires the removal of the energy capacitor bank screwed to the backs of the audio boards. These unplug once the screws are removed, and the amp can be operated without these banks.

This amplifier should be able to put out at least 100 watts per channel.

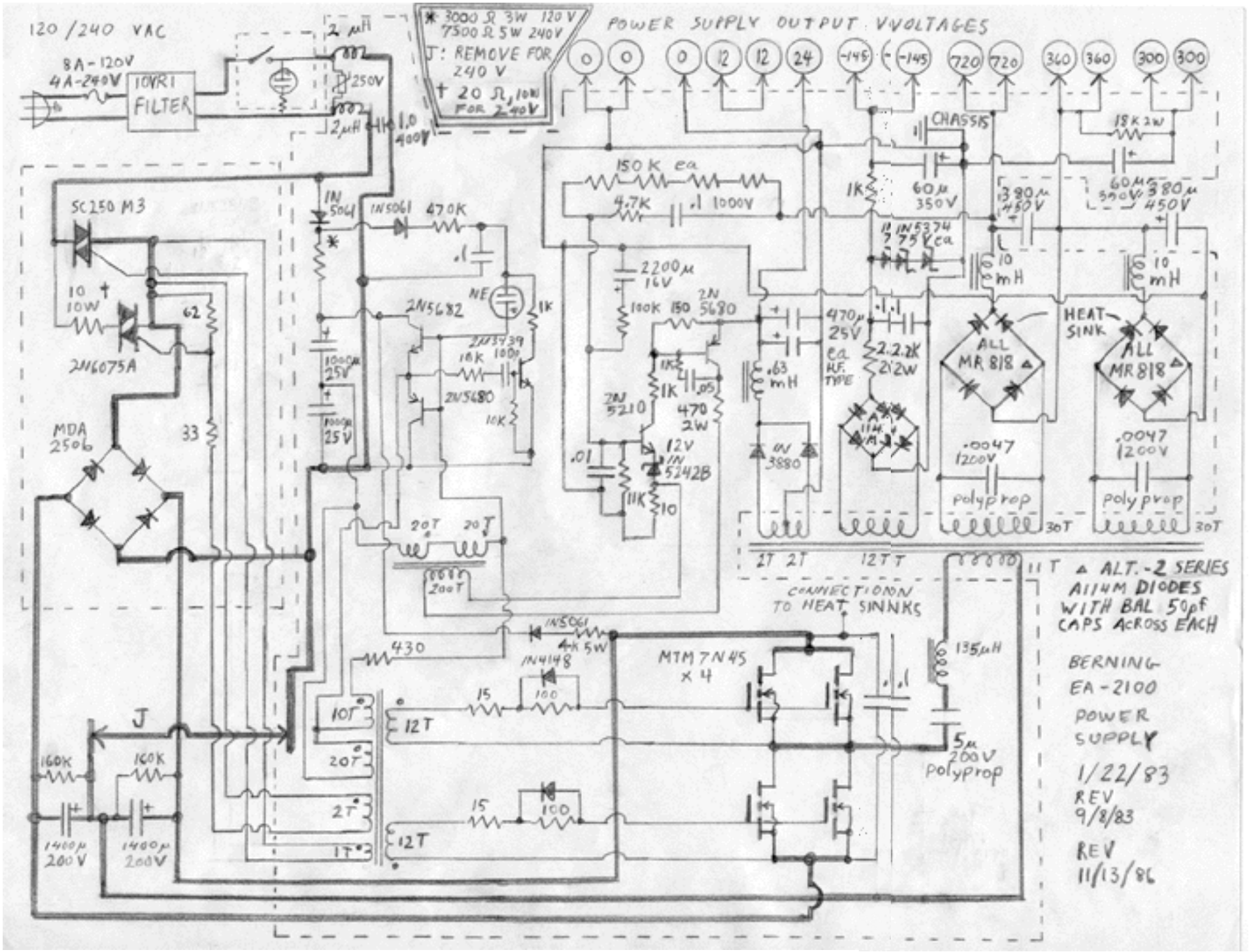
120/240 VAC
8A-120V
4A-240V
10VRI FILTER
2 µH
250V
2 µH
1.0 400V
* 3000 Ω 3W 120V
7500 Ω 5W 240V
J: REMOVE FOR 240 V
+ 20 Ω, 10W FOR 240V
POWER SUPPLY OUTPUT VOLTAGES
0 0 0 12 12 24 -145 -145 720 720 360 360 300 300
CHASSIS
18K 2W
150 K ea
4.7K
.1 1000V
1K
60µ 350V
380µ 450V
60µ 350V
380µ 450V
1N5374 75V ea
10 mH
10 mH
SC250 M3
1N5061
1N5061
470K
.1
NE
1K
2N5682
2N3439 100
18K
2N5680
10K
10 10W
2N6075A
62
1000µ 25V
1000µ 25V
33
MDA 2506
2200µ 16V
100K
150
2N 5680
1K
1K
.05
2N 5210
470 2W
12V 1N 5242B
.01
11K
10
.63 mH
470µ 25V ea HF TYPE
.1 .1
2.2K 2W
1N 3880
ALL MR 818
ALL MR 818
HEAT SINK
.0047 1200V
.0047 1200V
polyprop
polyprop
30T
30T
20T
20T
200T
2T 2T
12T T
11T
CONNECTION TO HEAT SINKS
1N5061
4K 5W
430
1N4148
100
MTM 7N45 x 4
135µH
.1 .1
15
100
10T
12T
20T
2T
1T
12T
J
160K
160K
1400µ 200V
1400µ 200V
15
100
5µ 200V polyprop
ALT.-2 SERIES
A114M DIODES
WITH BAL 50pf
CAPS ACROSS EACH
BERNING
EA-2100
POWER
SUPPLY
1/22/83
REV
9/8/83
REV
11/13/86

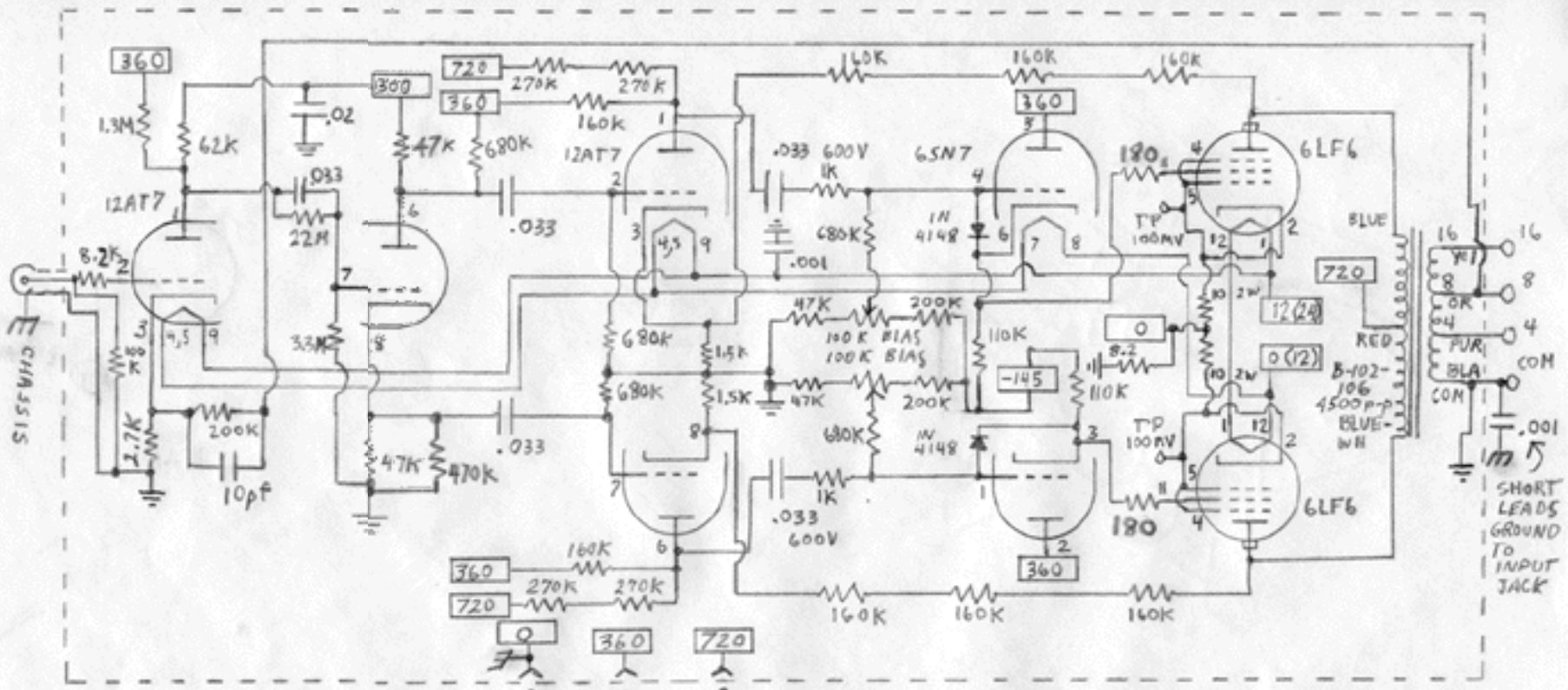

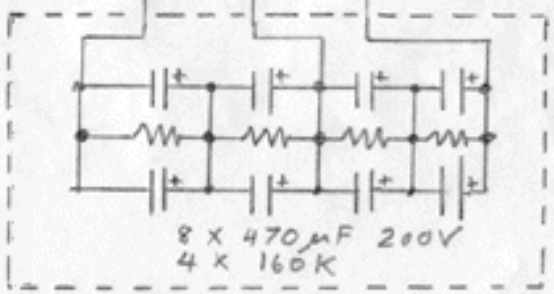

AUX ENERGY BOARD

OTHER CHANNEL IDENTICAL

BIAS: 0.1 VOLTS AT TP POINTS SET BY BIAS POTS AFTER HALF HOUR WARM-UP.

SERVICE: AUX ENERGY BOARD MAY BE REMOVED AND UNIT OPERATED.

--DANGEROUS VOLTAGES PRESENT AND EXPOSED--

BERNING EA-2100
DUAL 100 W. AMP
9/5/83
REV 11/13/86