BOGEN® MODEL CHB 100

PUBLIC ADDRESS AMPLIFIER

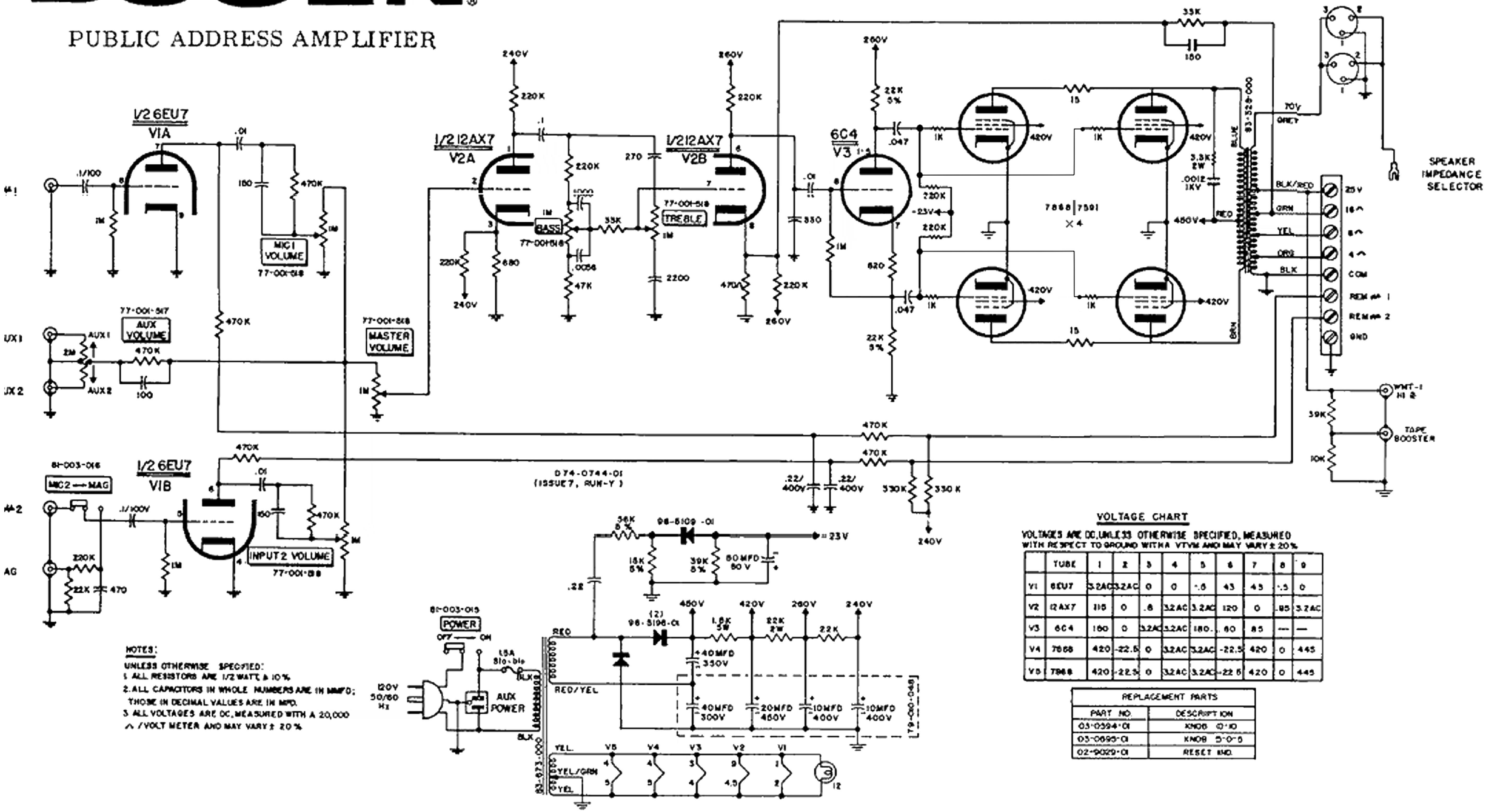

NOTES:

UNLESS OTHERWISE SPECIFIED:
1. ALL RESISTORS ARE 1/2 WATT & 10%
2. ALL CAPACITORS IN WHOLE NUMBERS ARE IN MMFD; THOSE IN DECIMAL VALUES ARE IN MFD.
3. ALL VOLTAGES ARE DC, MEASURED WITH A 20,000 Ω/VOLT METER AND MAY VARY ± 20%

VOLTAGE CHART

VOLTAGES ARE DC, UNLESS OTHERWISE SPECIFIED, MEASURED WITH RESPECT TO GROUND WITH A VTVM AND MAY VARY ± 20%

	TUBE	1	2	3	4	5	6	7	8	9
V1	6EU7	3.2AC	3.2AC	0	0	-.6	43	45	-.5	0
V2	12AX7	115	0	.6	3.2AC	3.2AC	120	0	.85	3.2AC
V3	6C4	160	0	3.2AC	3.2AC	180	60	85	—	—
V4	7868	420	-22.5	0	3.2AC	3.2AC	-22.5	420	0	445
V5	7868	420	-22.5	0	3.2AC	3.2AC	-22.5	420	0	445

REPLACEMENT PARTS	
PART NO.	DESCRIPTION
03-0394-01	KNOB 0-10
03-0695-01	KNOB 5-0-5
02-9029-01	RESET IND.