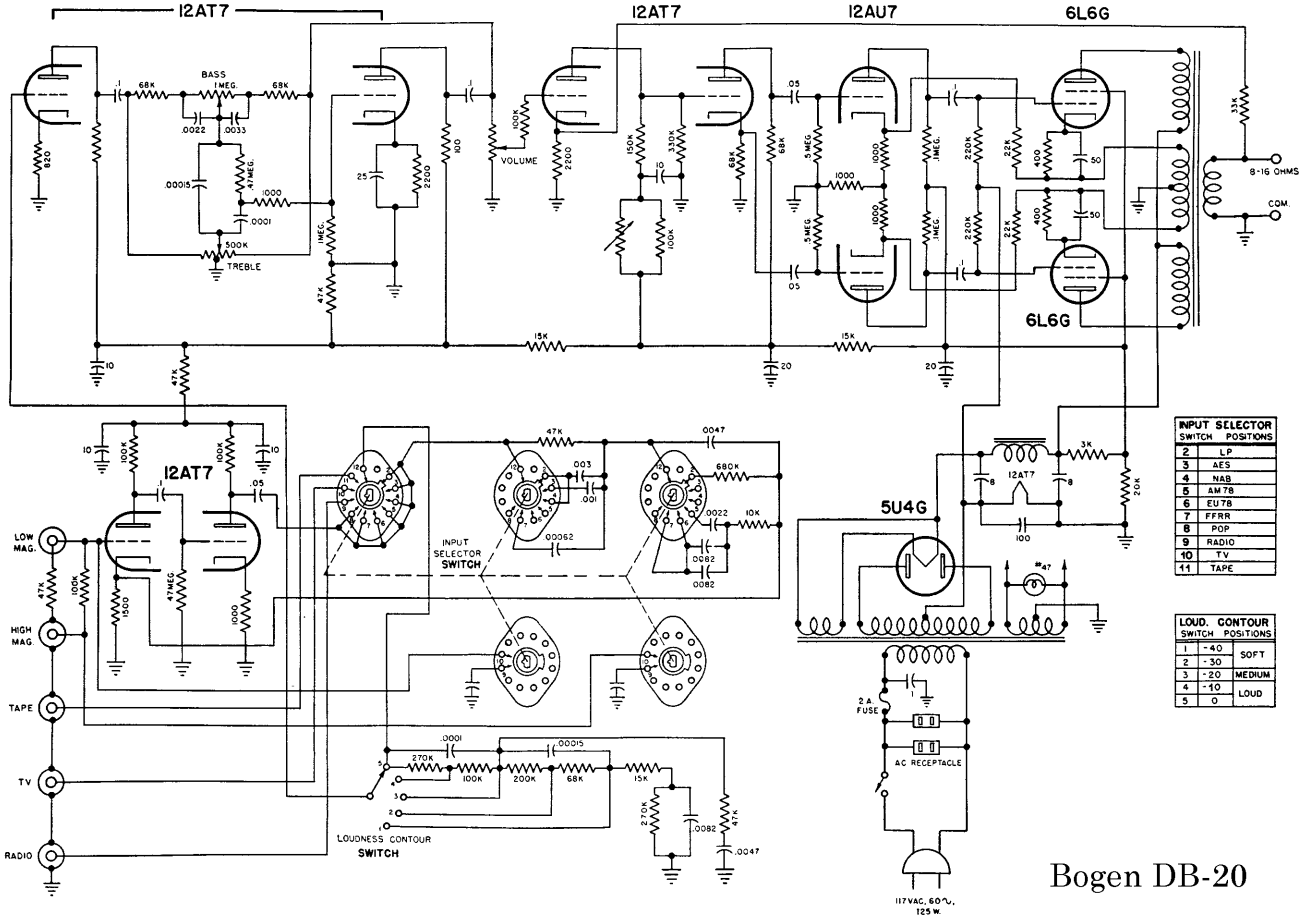

INPUT SELECTOR	
SWITCH	POSITIONS
2	LP
3	AES
4	NAB
5	AM 78
6	EU 78
7	FFRR
8	POP
9	RADIO
10	TV
11	TAPE

LOUD. CONTOUR		
SWITCH	POSITIONS	
1	-40	SOFT
2	-30	
3	-20	MEDIUM
4	-10	LOUD
5	0	

Bogen DB-20