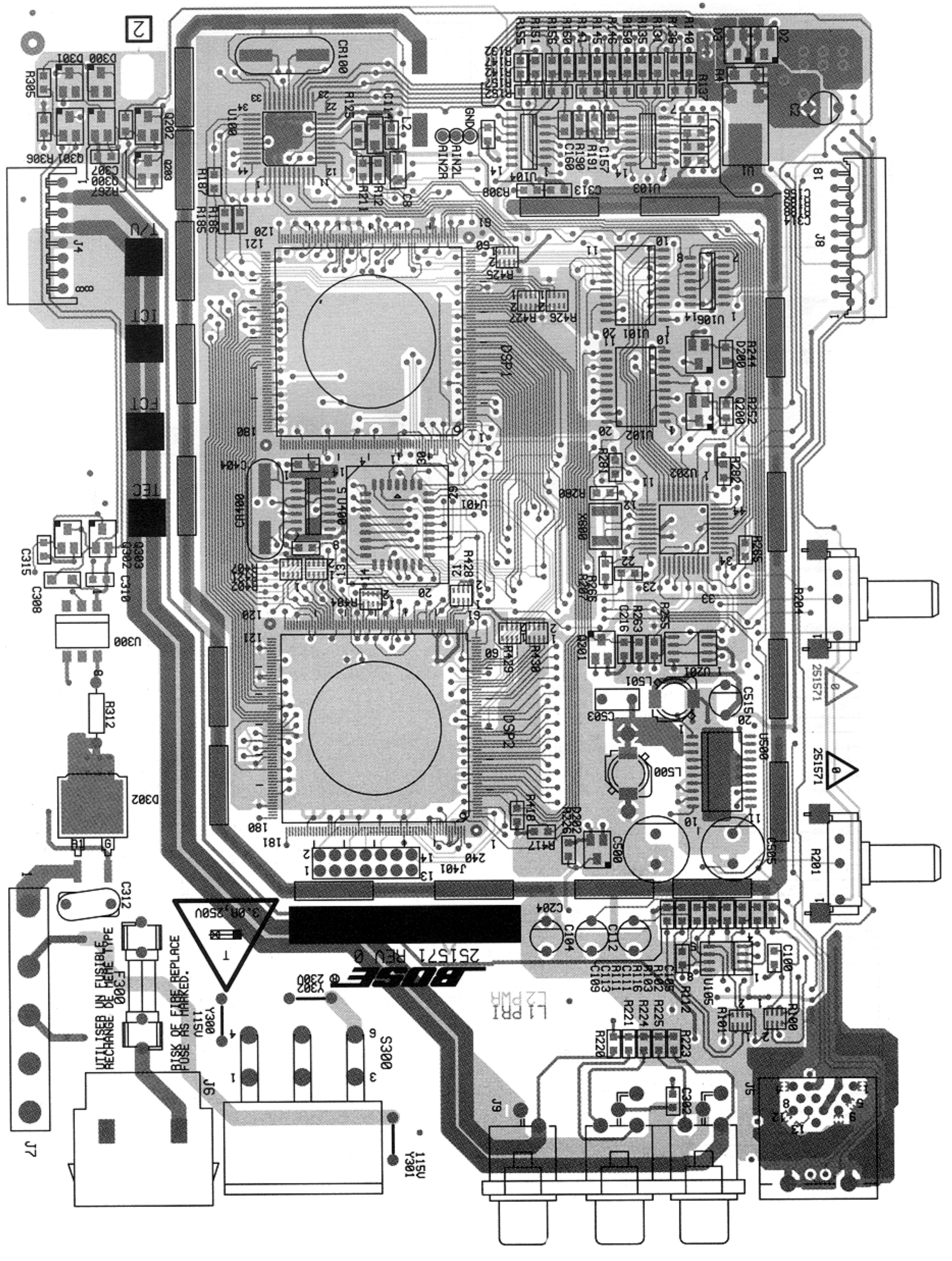 2
BOSE
251571 REV 0
3.0A,250V
RISK OF FIRE REPLACE FUSE AS MARKED.
UTILISER UN FUSIBLE RECHANGE DE MEME TYPE
F300
L1 PRI
L2 PWR
115V
230V
Y300
Y301
Y302
S300
J4
J5
J6
J7
J8
J9
J401
DSP1
DSP2
U100
U101
U102
U103
U104
U105
U106
U201
U202
U300
U400
U401
U500
U1
CR100
CR400
X600
LS500
LS501
D302
R201
R204
T/U
ICT
FCT
TEC
GND
AIN2L
AIN2R

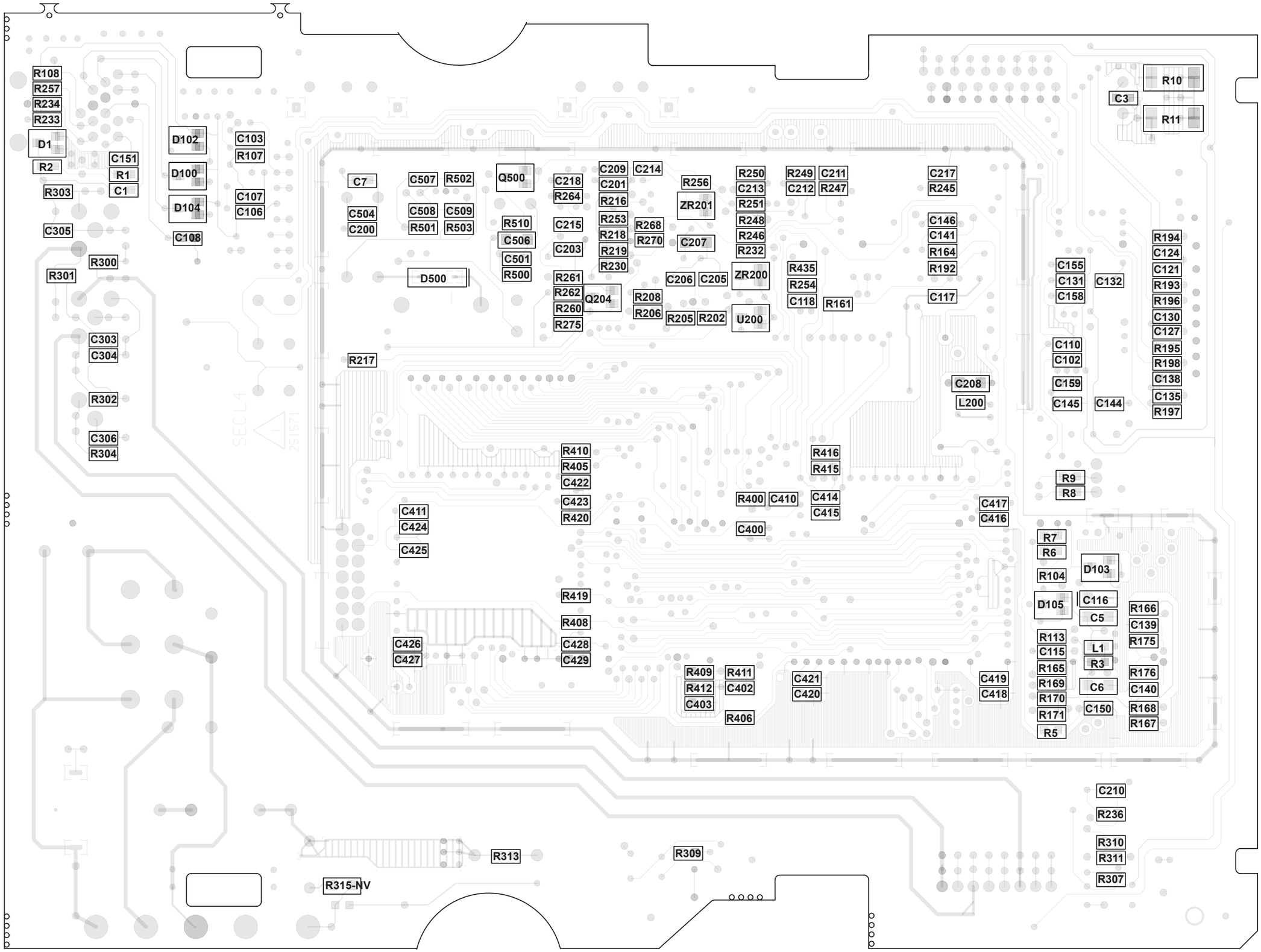
R108
R257
R234
R233
D1
R2
R303
C151
R1
C1
D102
D100
D104
C108
C103
R107
C107
C106
C305
R300
R301
C303
C304
R302
C306
R304
SEC L 4
251571
C7
C504
C200
C507
R502
C508
C509
R501
R503
Q500
R510
C506
C501
R500
D500
C218
R264
C215
C203
R261
R262
R260
R275
Q204
C209
C201
R216
R253
R218
R219
R230
C214
R268
R270
R256
ZR201
C207
C206
C205
ZR200
R208
R206
R205
R202
U200
R250
C213
R251
R248
R246
R232
R249
C212
C211
R247
R435
R254
C118
R161
C217
R245
C146
C141
R164
R192
C117
C208
L200
C155
C131
C158
C132
C110
C102
C159
C145
C144
R194
C124
C121
R193
R196
C130
C127
R195
R198
C138
C135
R197
R217
R410
R405
C422
C423
R420
C411
C424
C425
R419
R408
C428
C429
C426
C427
R409
R412
C403
R411
C402
R406
C421
C420
R400
C410
C400
C414
C415
R416
R415
C417
C416
C419
C418
R9
R8
R7
R6
R104
D103
D105
C116
C5
R113
C115
R165
R169
R170
R171
R5
L1
R3
C6
C150
R166
C139
R175
R176
C140
R168
R167
R10
C3
R11
C210
R236
R310
R311
R307
R313
R309
R315-NV

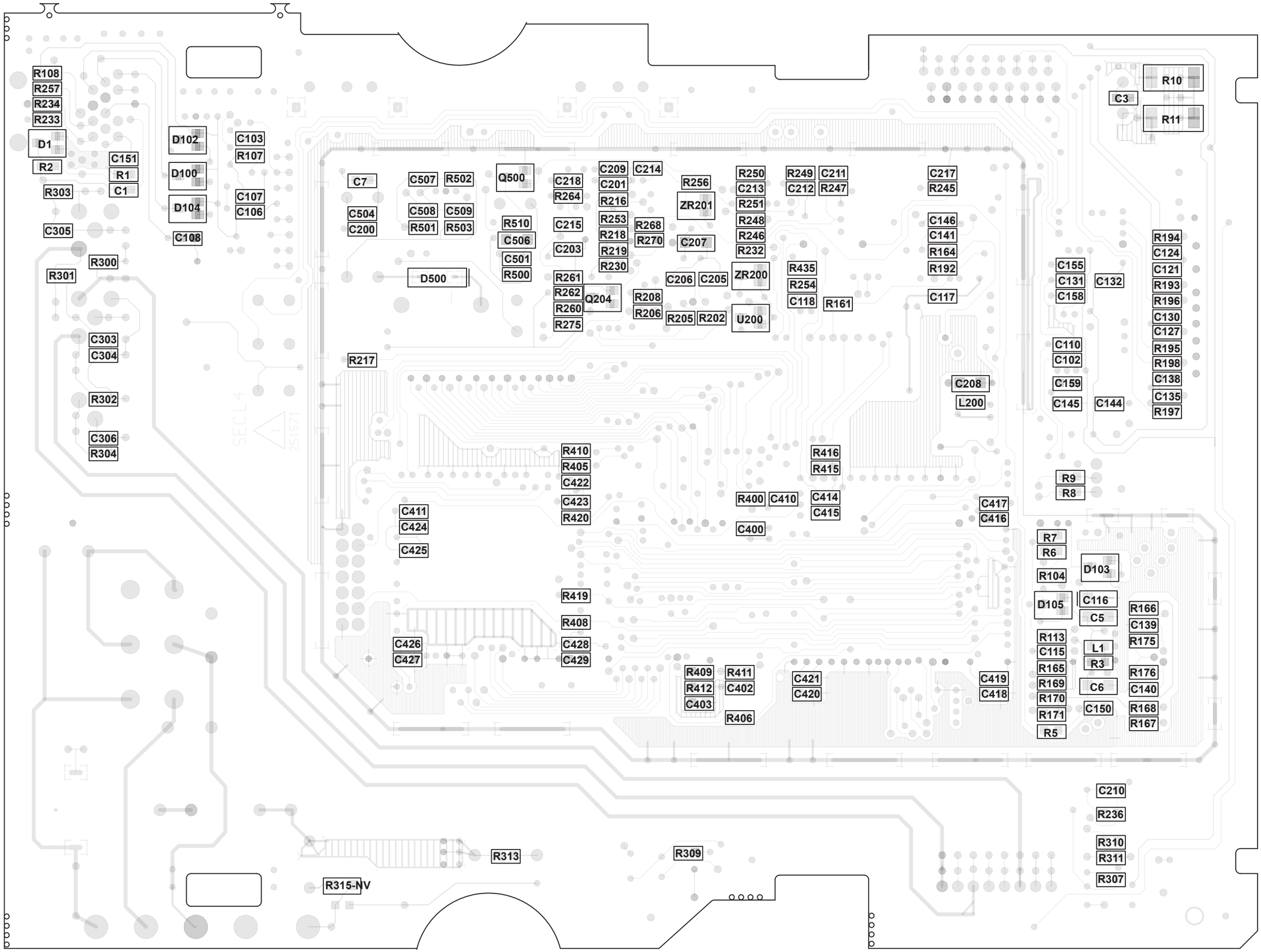
R108
R257
R234
R233
D1
R2
R303
C151
R1
C1
D102
D100
D104
C108
C103
R107
C107
C106
C305
R300
R301
C303
C304
R302
C306
R304
SEC L 4
251571
C7
C504
C200
C507
R502
C508
C509
R501
R503
Q500
R510
C506
C501
R500
D500
C218
R264
C215
C203
R261
R262
R260
R275
Q204
C209
C201
R216
R253
R218
R219
R230
C214
R268
R270
R256
ZR201
C207
C206
C205
ZR200
R208
R206
R205
R202
U200
R250
C213
R251
R248
R246
R232
R249
C212
C211
R247
R435
R254
C118
R161
C217
R245
C146
C141
R164
R192
C117
C208
L200
C155
C131
C158
C132
C110
C102
C159
C145
C144
R194
C124
C121
R193
R196
C130
C127
R195
R198
C138
C135
R197
R217
R410
R405
C422
C423
R420
C411
C424
C425
R419
R408
C428
C429
C426
C427
R409
R412
C403
R411
C402
R406
C421
C420
R400
C410
C400
C414
C415
R416
R415
C417
C416
C419
C418
R9
R8
R7
R6
R104
D103
D105
C116
C5
R113
C115
R165
R169
R170
R171
R5
L1
R3
C6
C150
R166
C139
R175
R176
C140
R168
R167
R10
C3
R11
C210
R236
R310
R311
R307
R313
R309
R315-NV

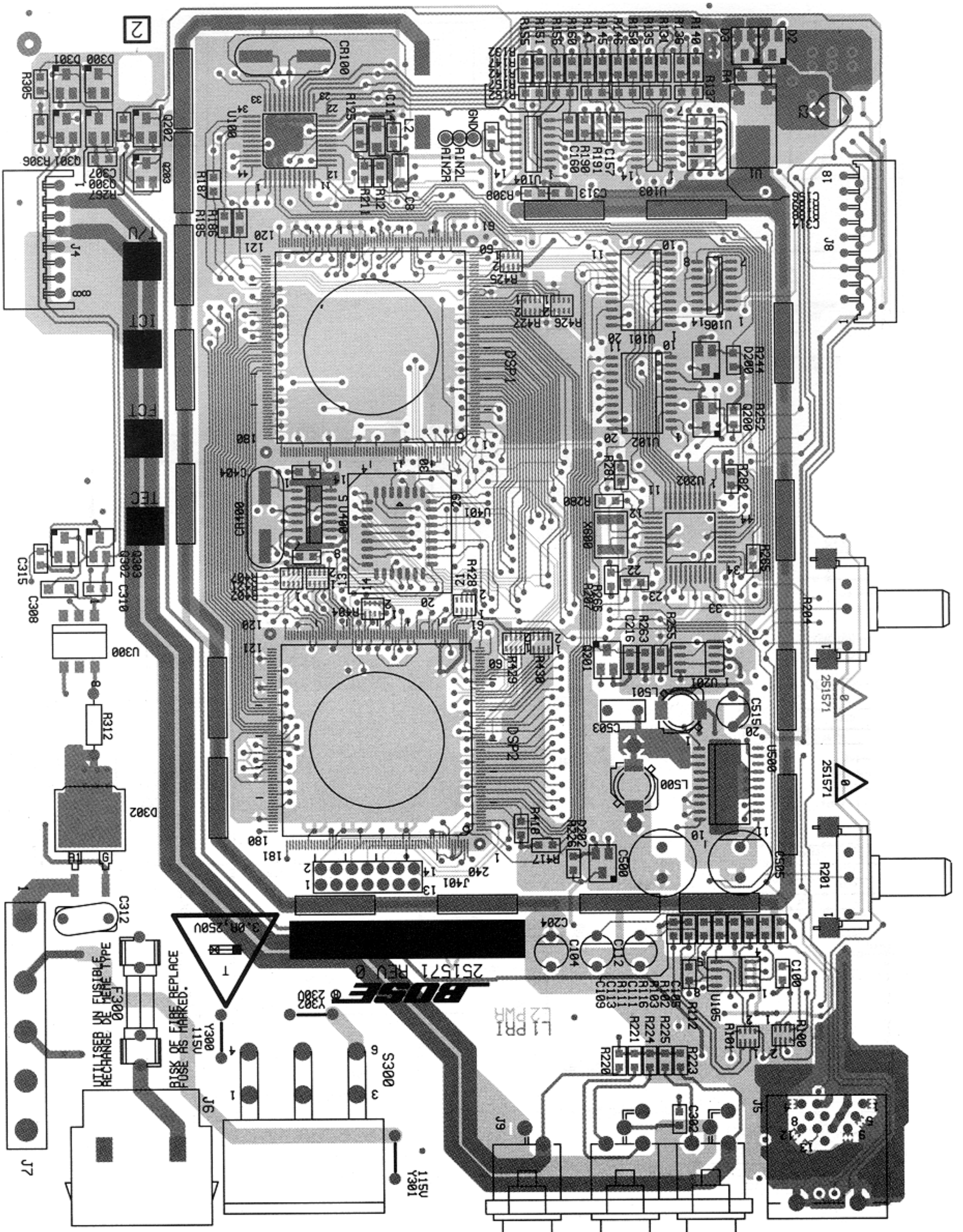

2
BOSE
251571 REV 0
3.0A,250V
RISK OF FIRE REPLACE FUSE AS MARKED.
UTILISER UN FUSIBLE DE RECHANGE DE MEME TYPE
DSP1
DSP2
T/U
ICT
FCT
TEC
J4
J5
J6
J7
J8
J9
J401
S300
F300
U300
D302
R312
C312
115V
230V
L1 PRI
L2 PWR
GND
AIN2L
AIN2R
R201
R204
U500
LS00
LS01
C500
C505
CR100
CR400
U100
U400
U401
X600

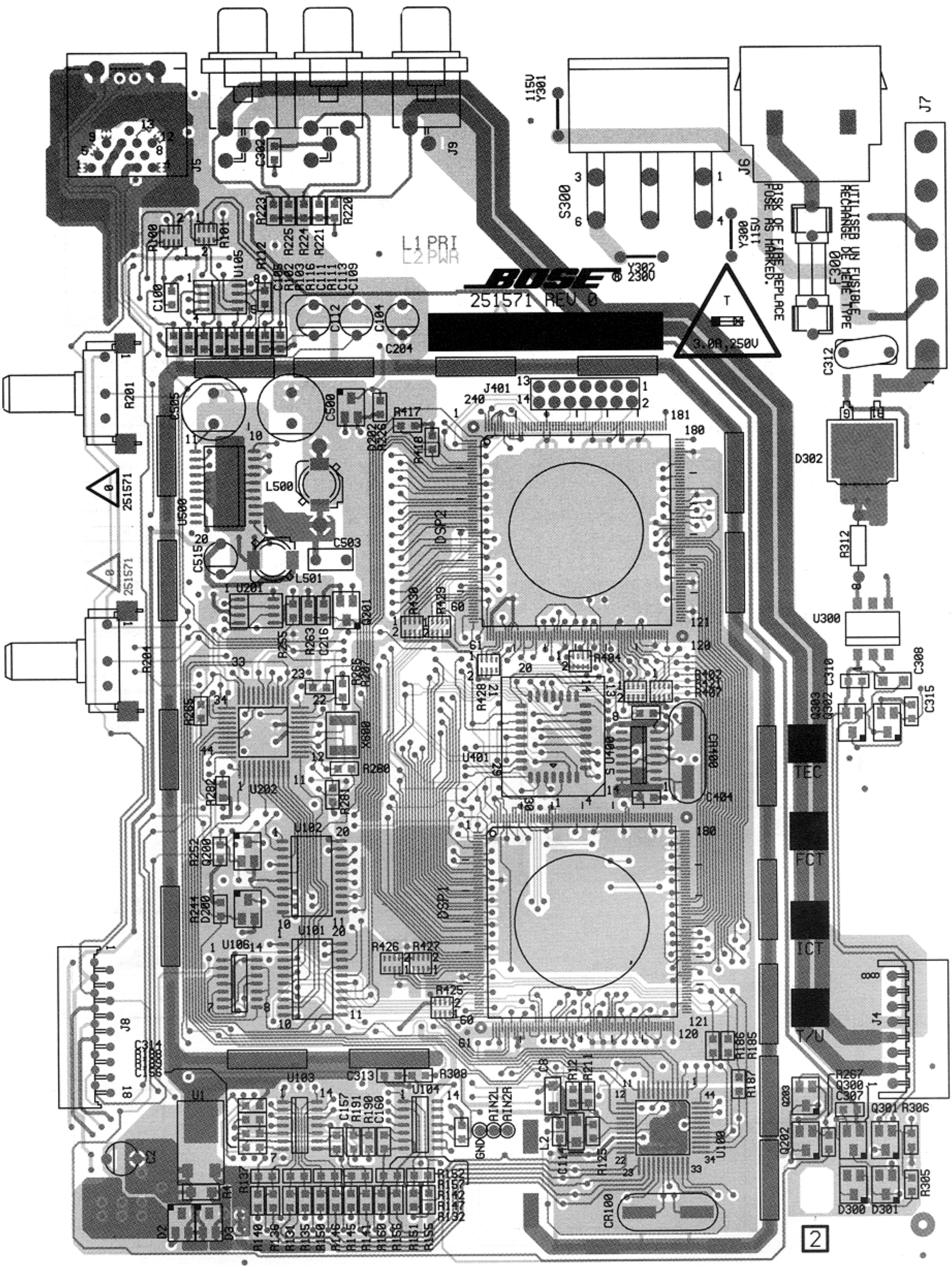
BOSE
251571 REV 0
L1 PRI
L2 PWR
3.0A,250V
T
RISK OF FIRE REPLACE
FUSE AS MARKED.
UTILISER UN FUSIBLE
RECHANGE DE MEME TYPE
F300
Y300
115V
Y301
115V
Y302
230V
S300
J5
J6
J7
J8
J9
J4
J401
C302
R220
R221
R223
R224
R225
R100
R101
R112
U105
C100
C105
R102
R103
R116
C111
R111
C113
C109
C112
C104
C204
C312
D302
R312
U300
C308
C310
C315
Q302
Q303
TEC
FCT
ICT
T/U
R201
R204
C505
C500
D202
R226
R417
R418
L500
U500
C503
C515
L501
251571
U201
Q201
R255
R263
C216
R429
R430
R428
R404
R402
R121
R407
U400
U401
C400
C404
X600
R265
R267
R280
R281
R282
U202
R252
Q200
R244
D200
U102
U101
U106
DSP1
DSP2
R426
R427
R425
C314
U1
U103
U104
C313
R308
C157
R191
R190
C160
GND
AIN2L
AIN2R
L2
C114
R125
C8
R12
R211
U100
R186
R185
R187
Q300
C307
Q301
R306
Q203
Q202
R305
D300
D301
CR100
C2
R4
D2
D3
R137
R140
R136
R131
R135
R150
R146
R145
R141
R160
R156
R151
R155
R152
R157
R142
R147
R132
2

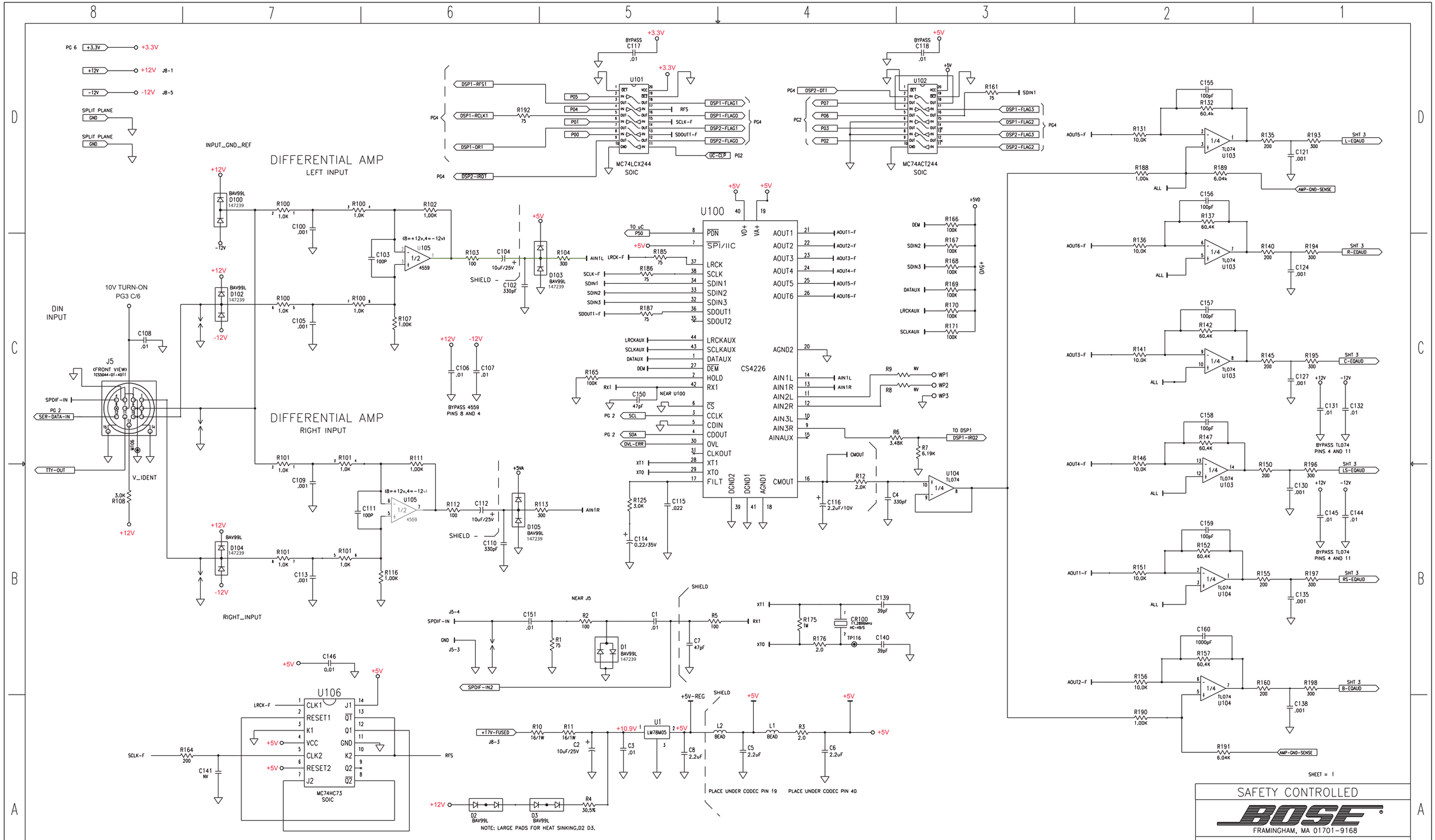

SAFETY CONTROLLED

BOSE

FRAMINGHAM, MA 01701-9168

AM-25/30P Series II
DSP PCB Assembly
Part Number 251571

NOTES:
Power supply voltages drop to zero when console is turned off.

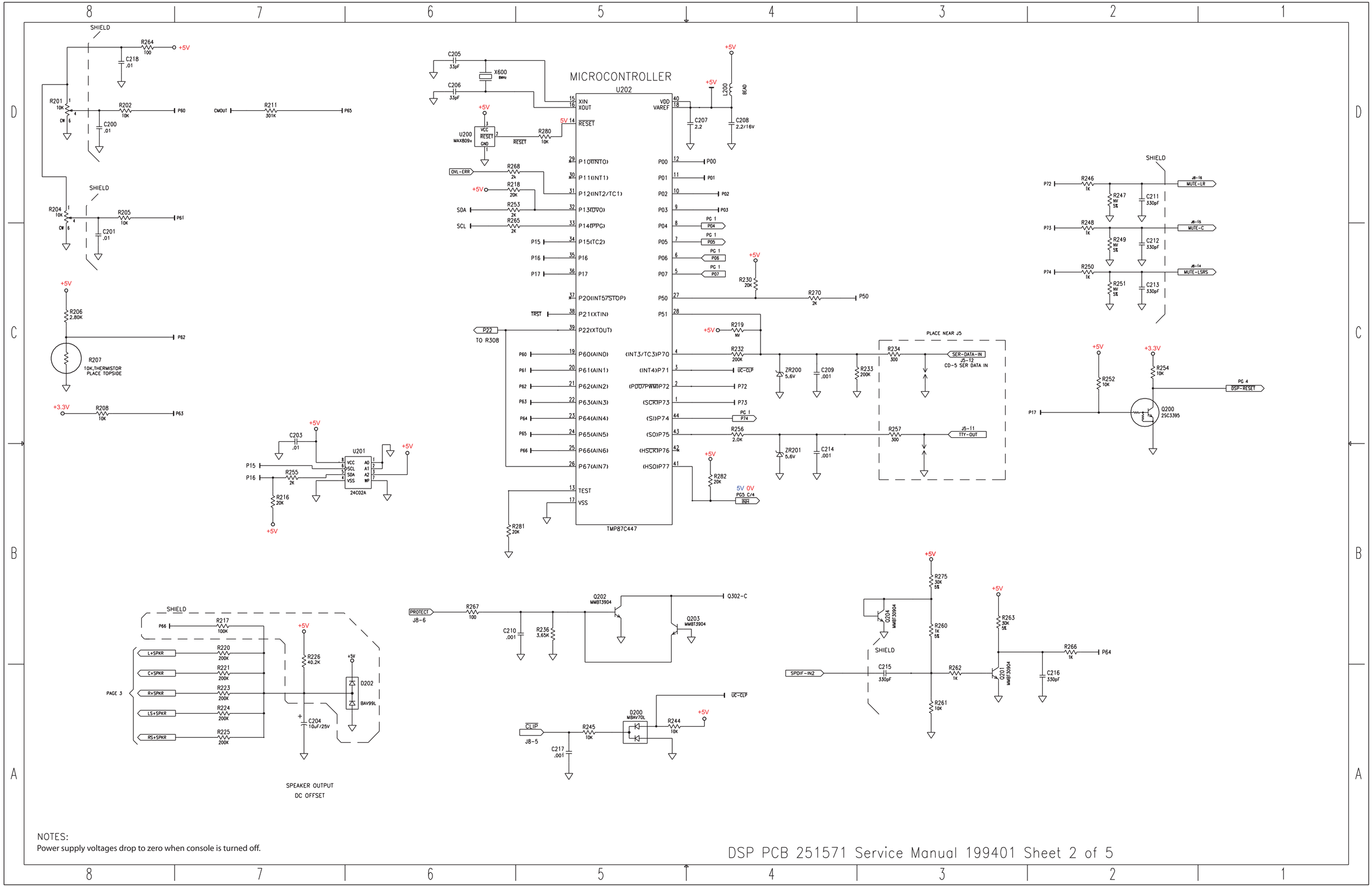

NOTES:
Power supply voltages drop to zero when console is turned off.

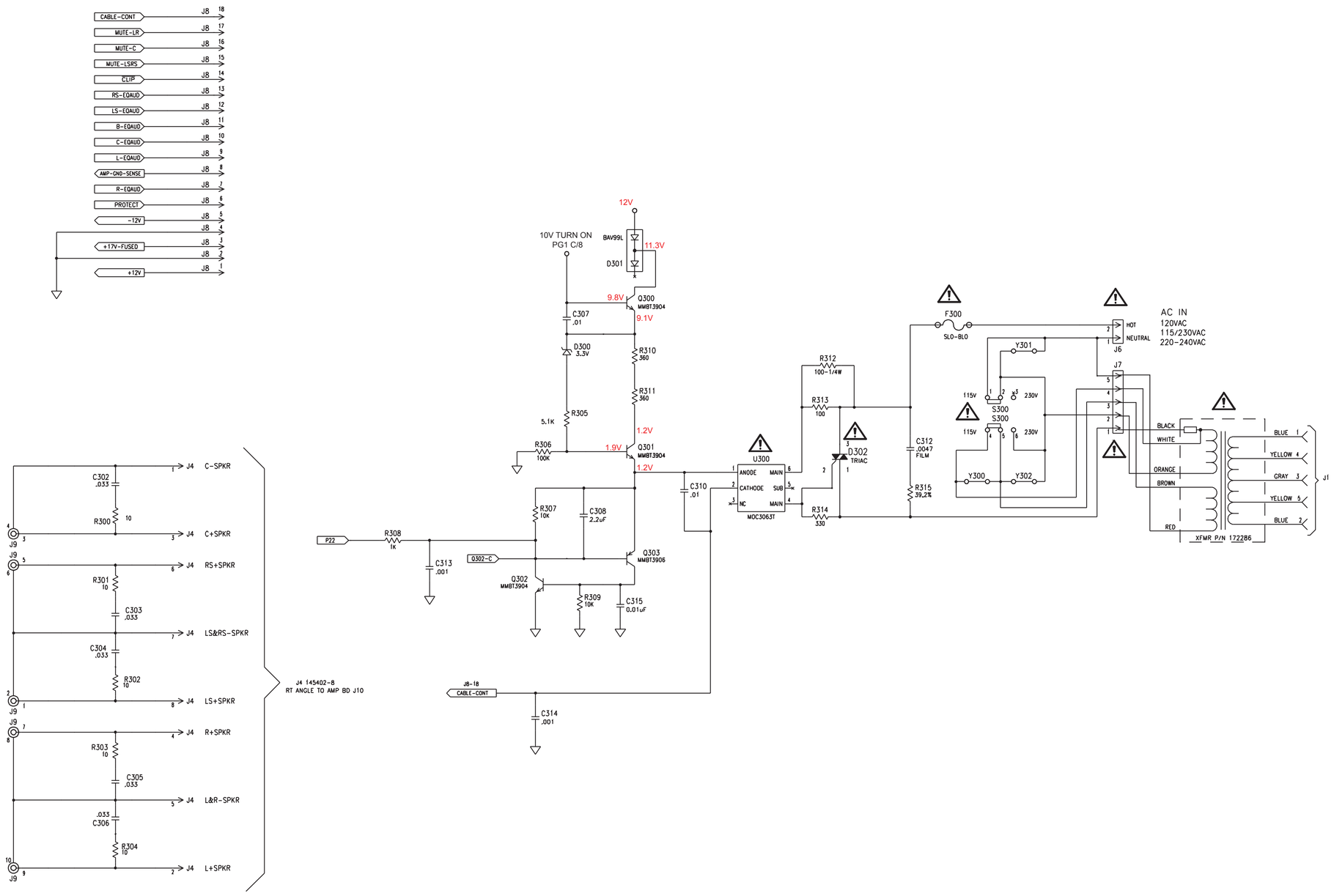

NOTES:
Power supply voltages drop to zero when console is turned off.

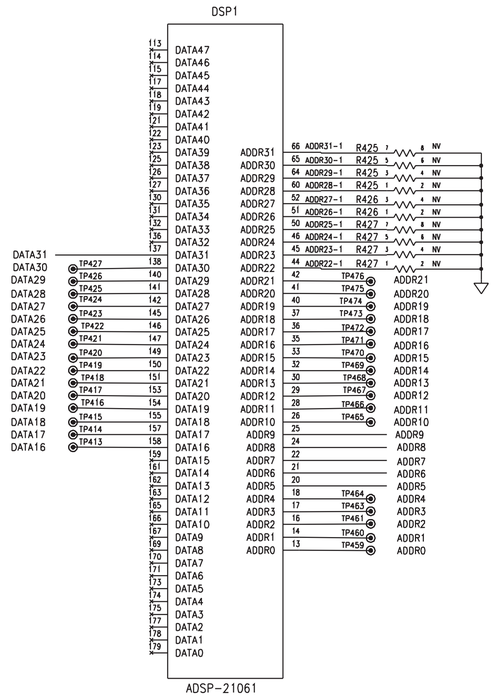

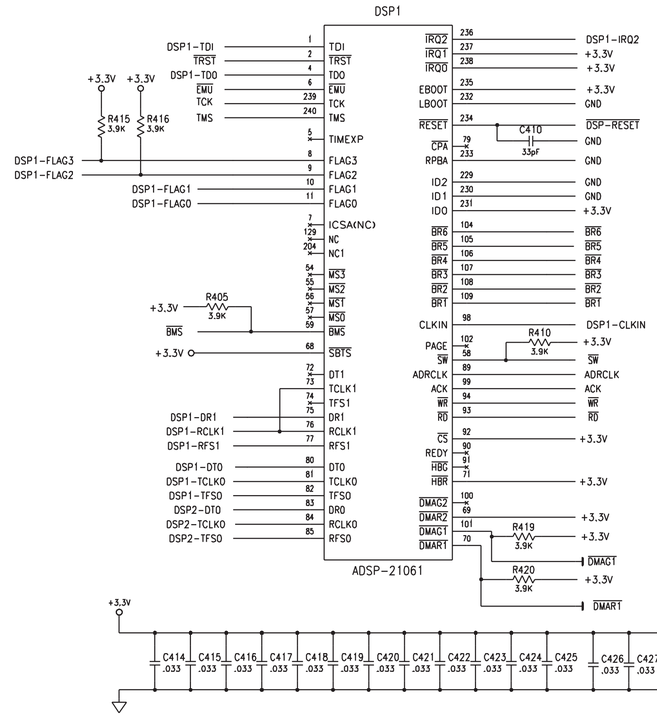

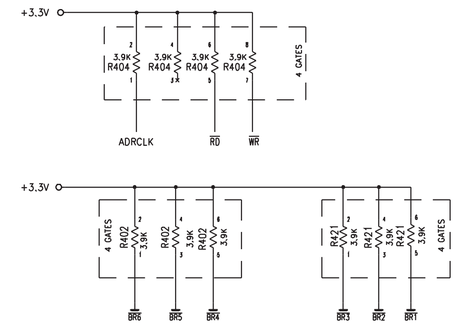

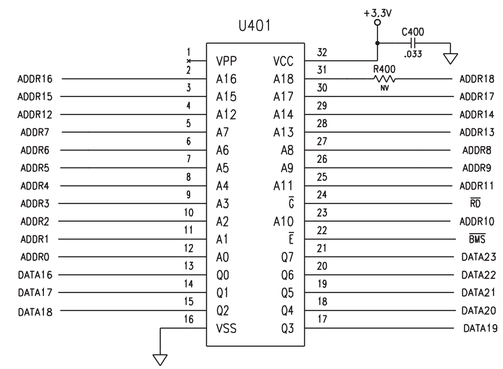

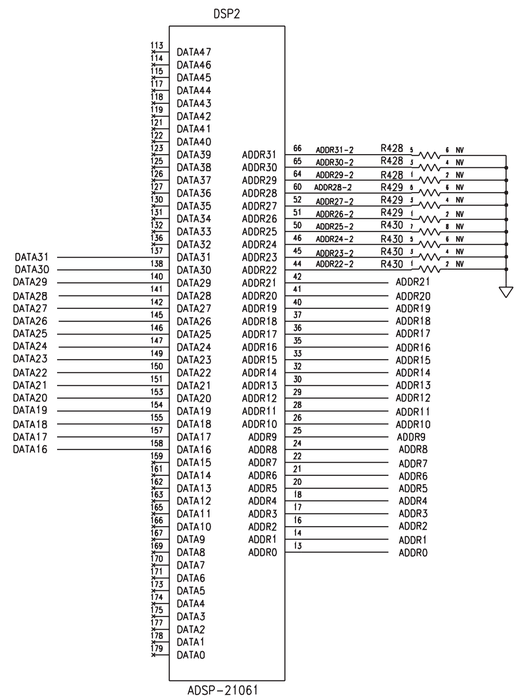

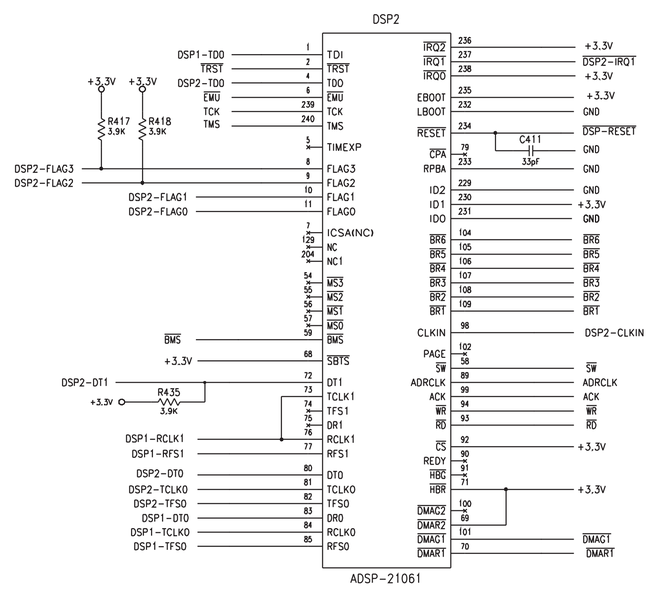

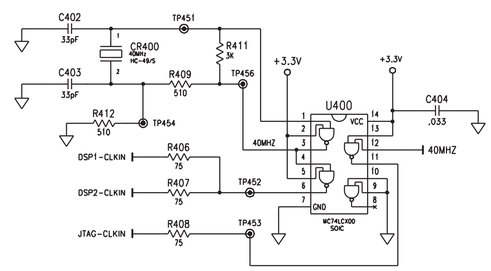

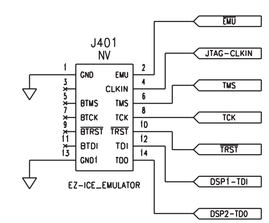

NOTES:
Power supply voltages drop to zero when console is turned off.

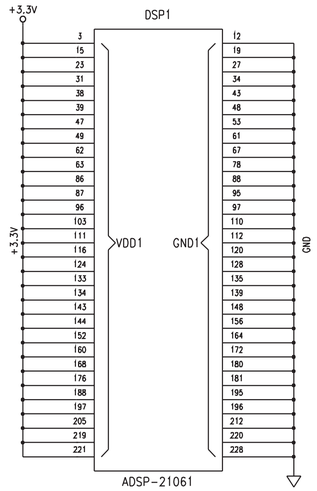

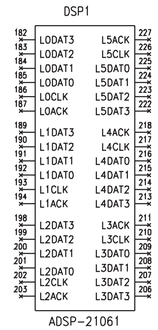

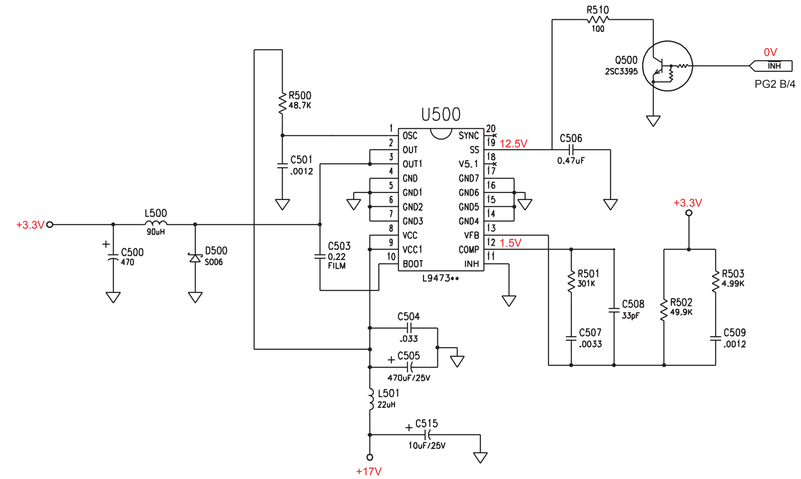

NOTE - At power down, 5V will be present at the base of Q500 for approximately 5 seconds to allow pin 19 of U500 to be pulled low, shutting off the regulator. The 3.3V supply is turned off as part of the normal power down sequence.

+17V-FUSED — FROM J8-3

+3.3V

GND

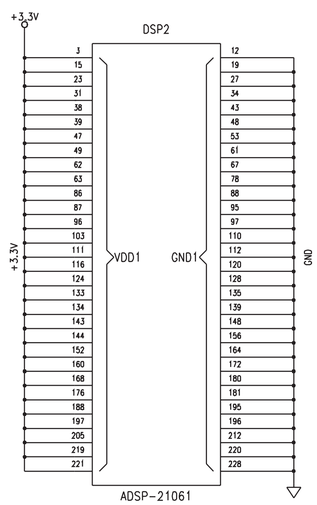

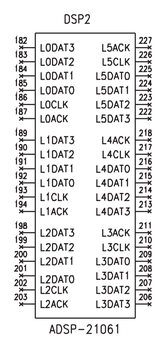

NOTES:
Power supply voltages drop to zero when console is turned off.

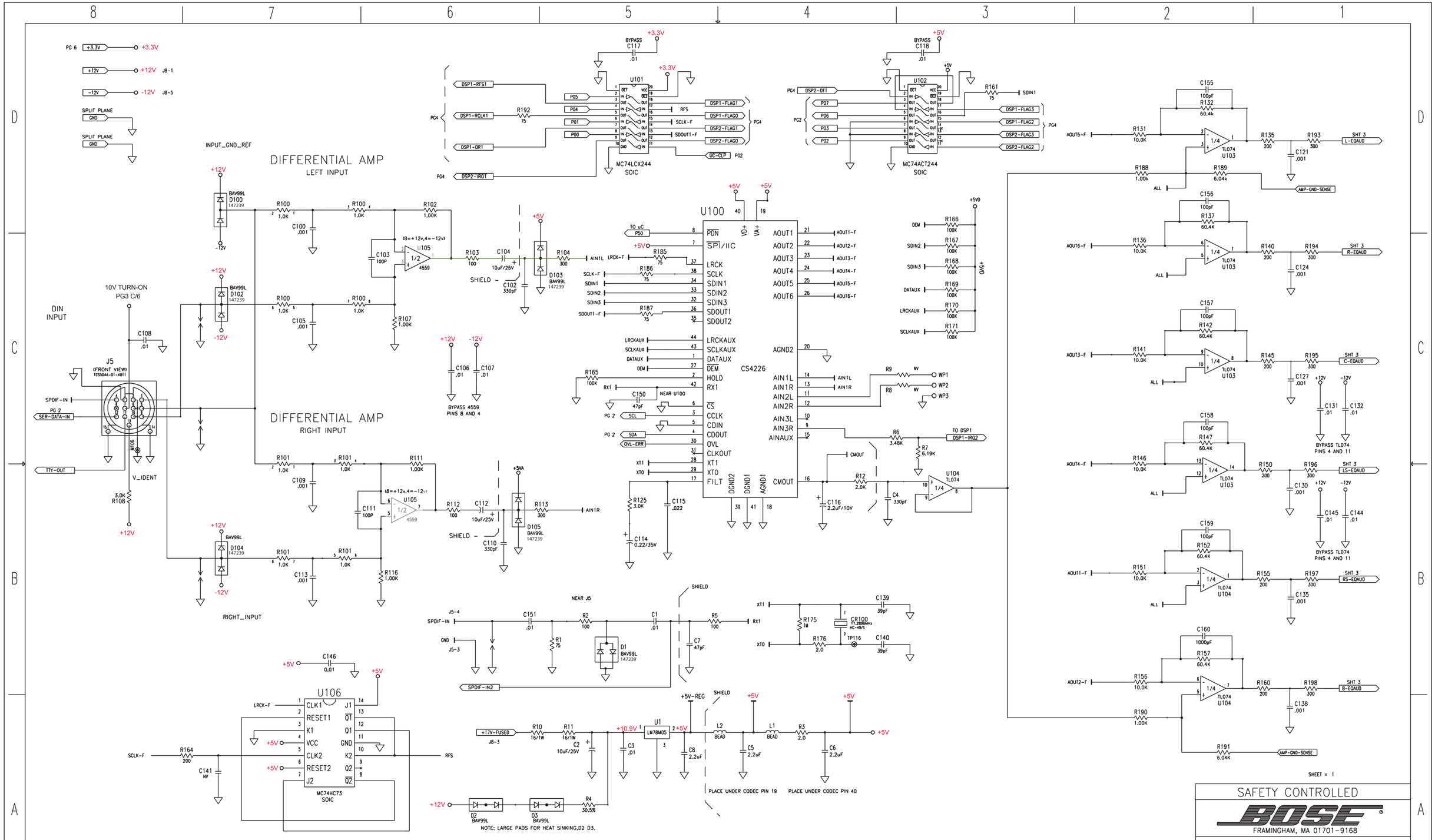

SAFETY CONTROLLED

BOSE

FRAMINGHAM, MA 01701-9168

AM-25/30P Series II
DSP PCB Assembly
Part Number 251571

NOTES:
Power supply voltages drop to zero when console is turned off.

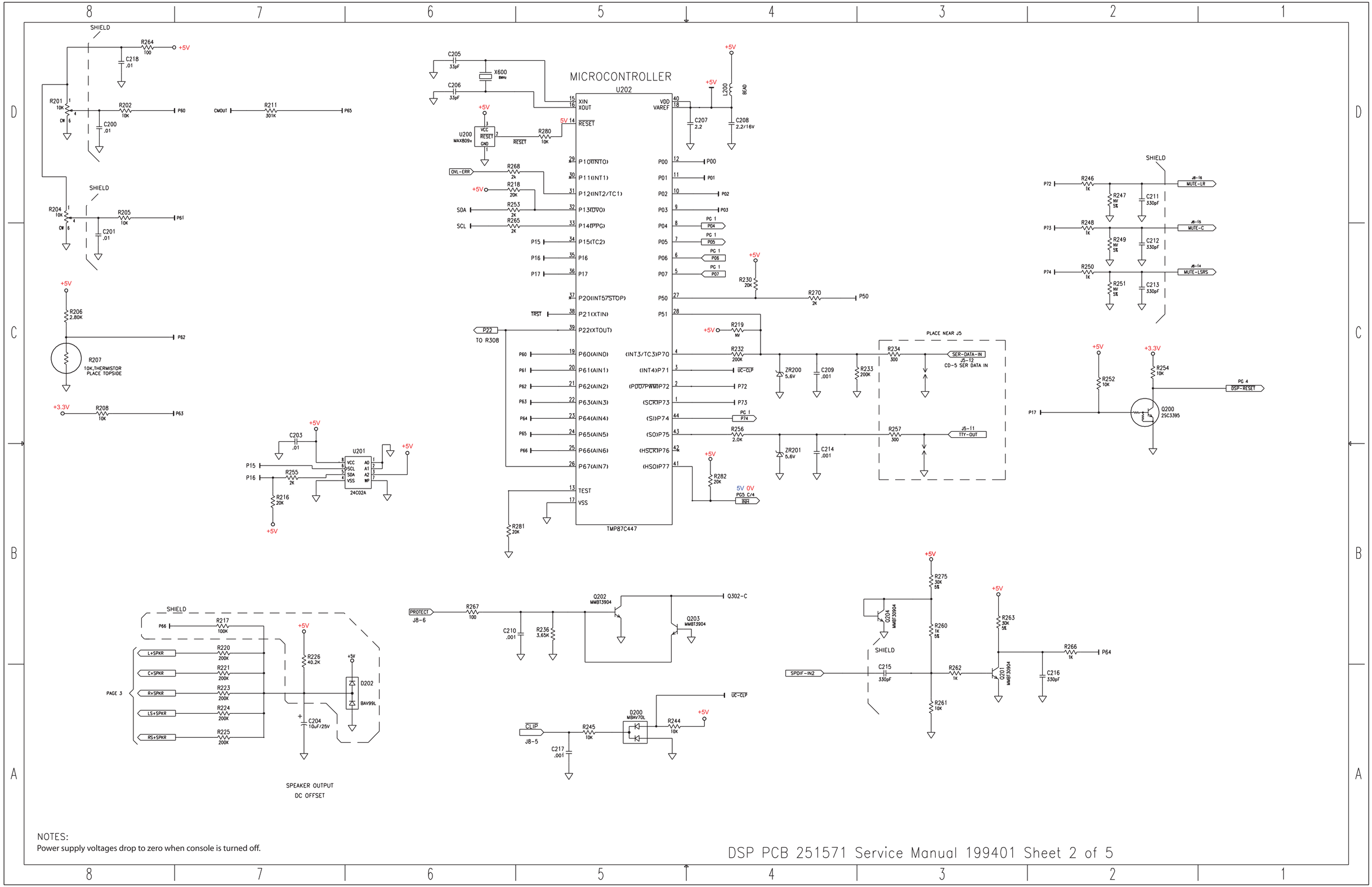

NOTES:
Power supply voltages drop to zero when console is turned off.

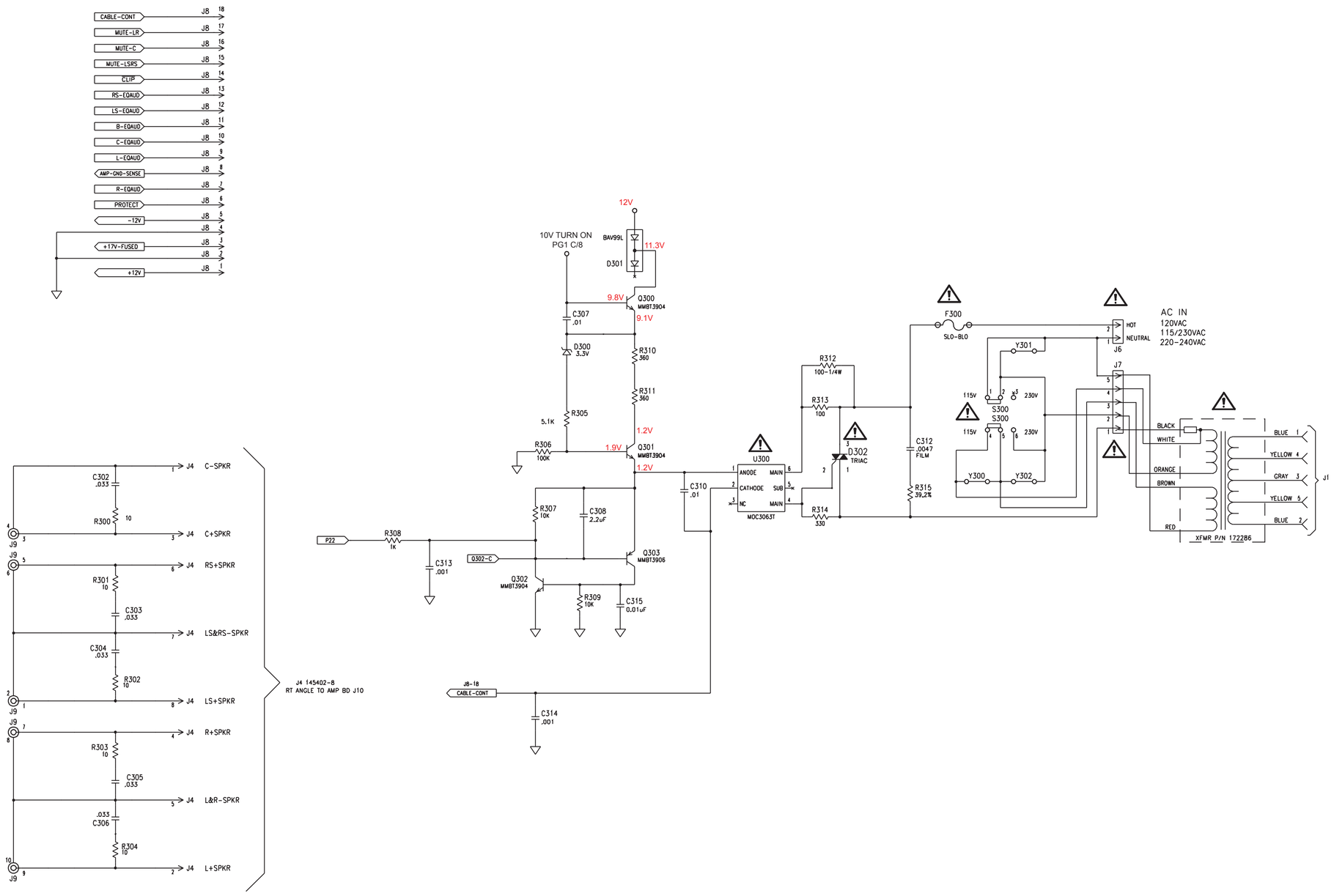

NOTES:
Power supply voltages drop to zero when console is turned off.

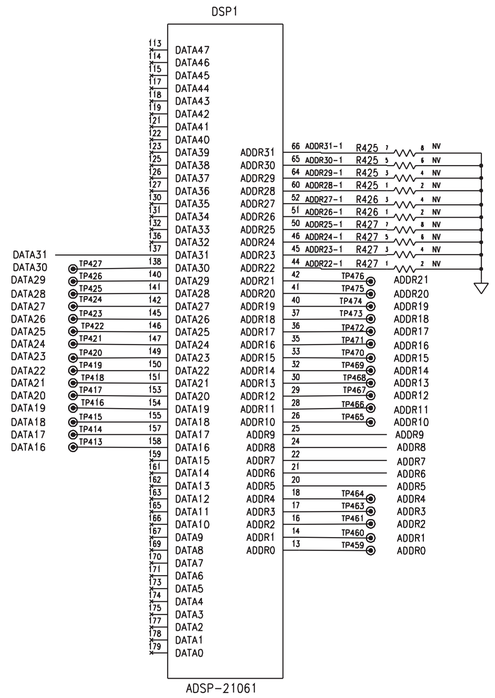

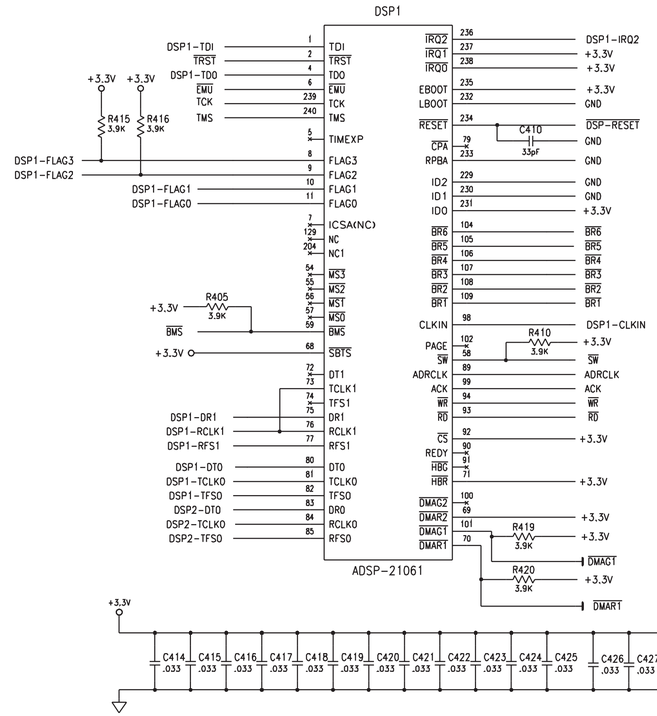

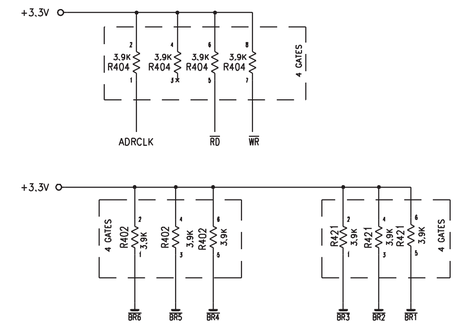

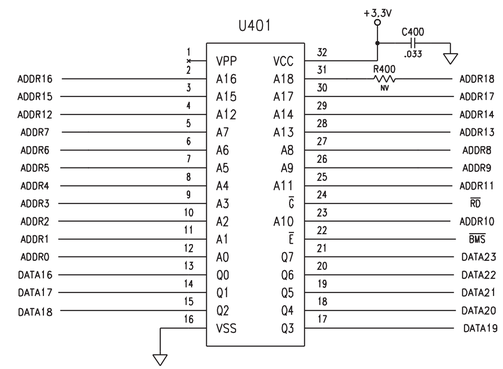

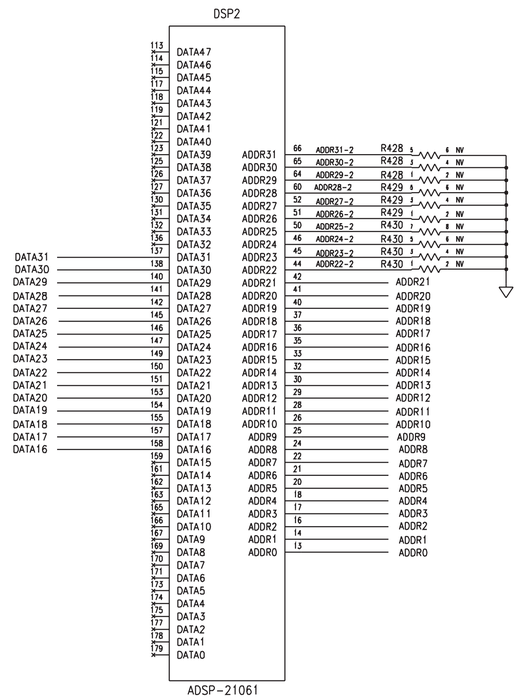

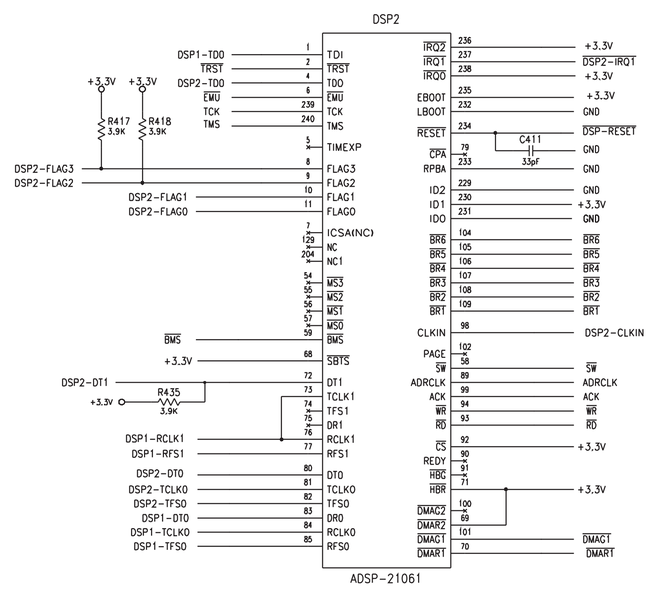

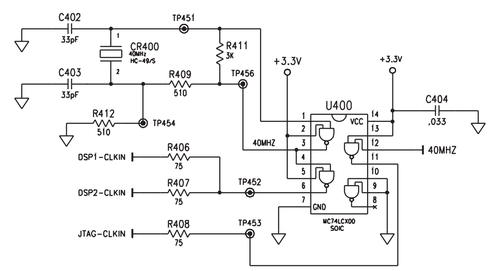

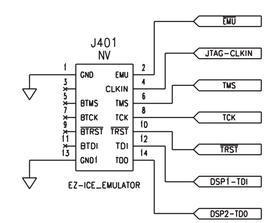

NOTES:
Power supply voltages drop to zero when console is turned off.

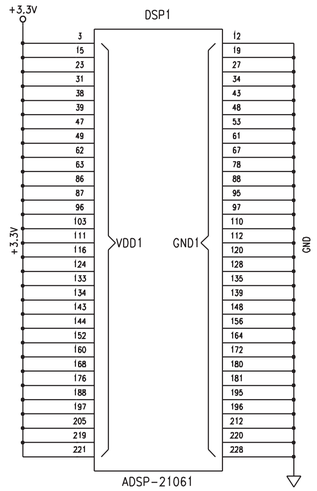

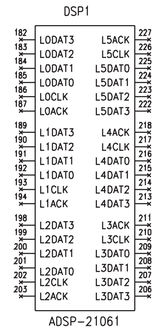

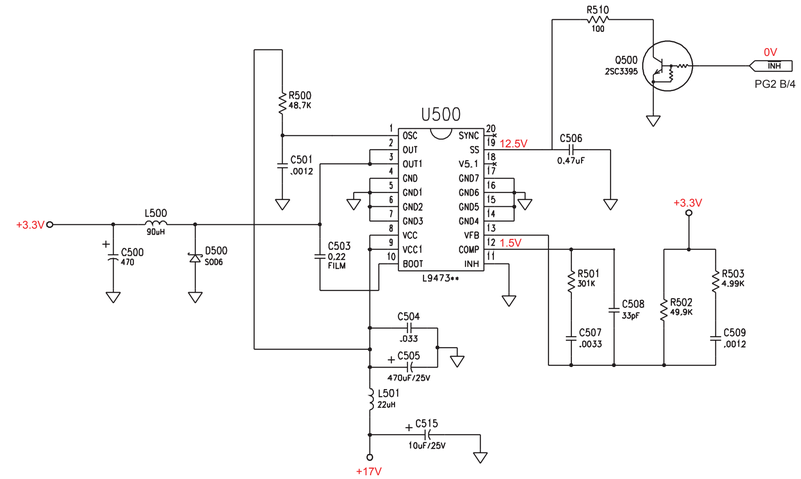

NOTE - At power down, 5V will be present at the base of Q500 for approximately 5 seconds to allow pin 19 of U500 to be pulled low, shutting off the regulator. The 3.3V supply is turned off as part of the normal power down sequence.

+17V-FUSED — FROM J8-3

+3.3V

GND

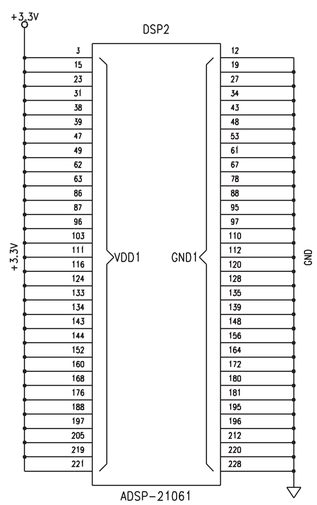

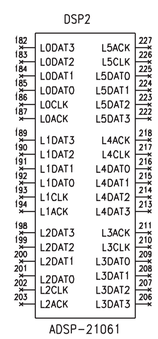

NOTES:
Power supply voltages drop to zero when console is turned off.

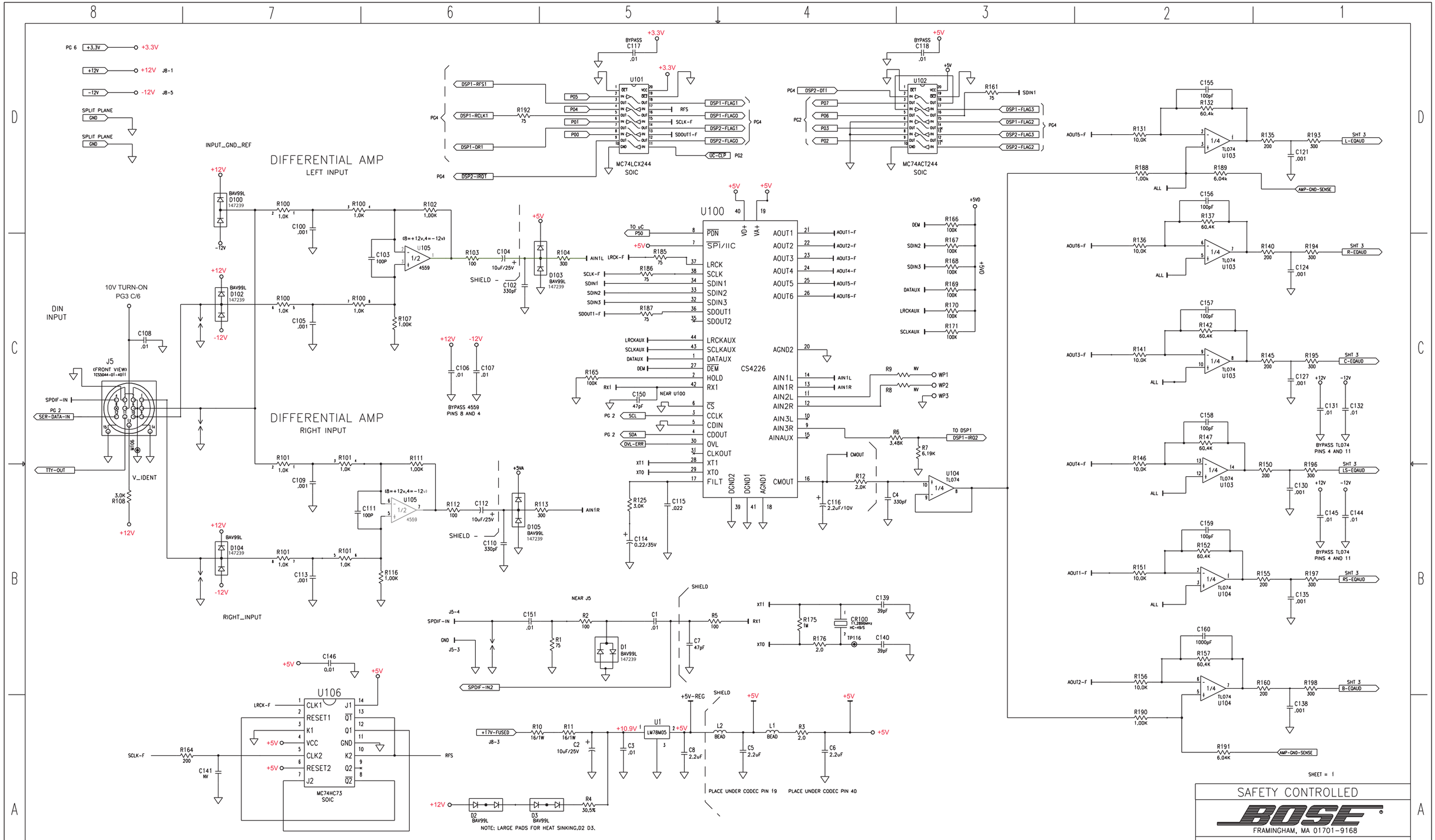

SAFETY CONTROLLED

BOSE

FRAMINGHAM, MA 01701-9168

AM-25/30P Series II
DSP PCB Assembly
Part Number 251571

NOTES:
Power supply voltages drop to zero when console is turned off.

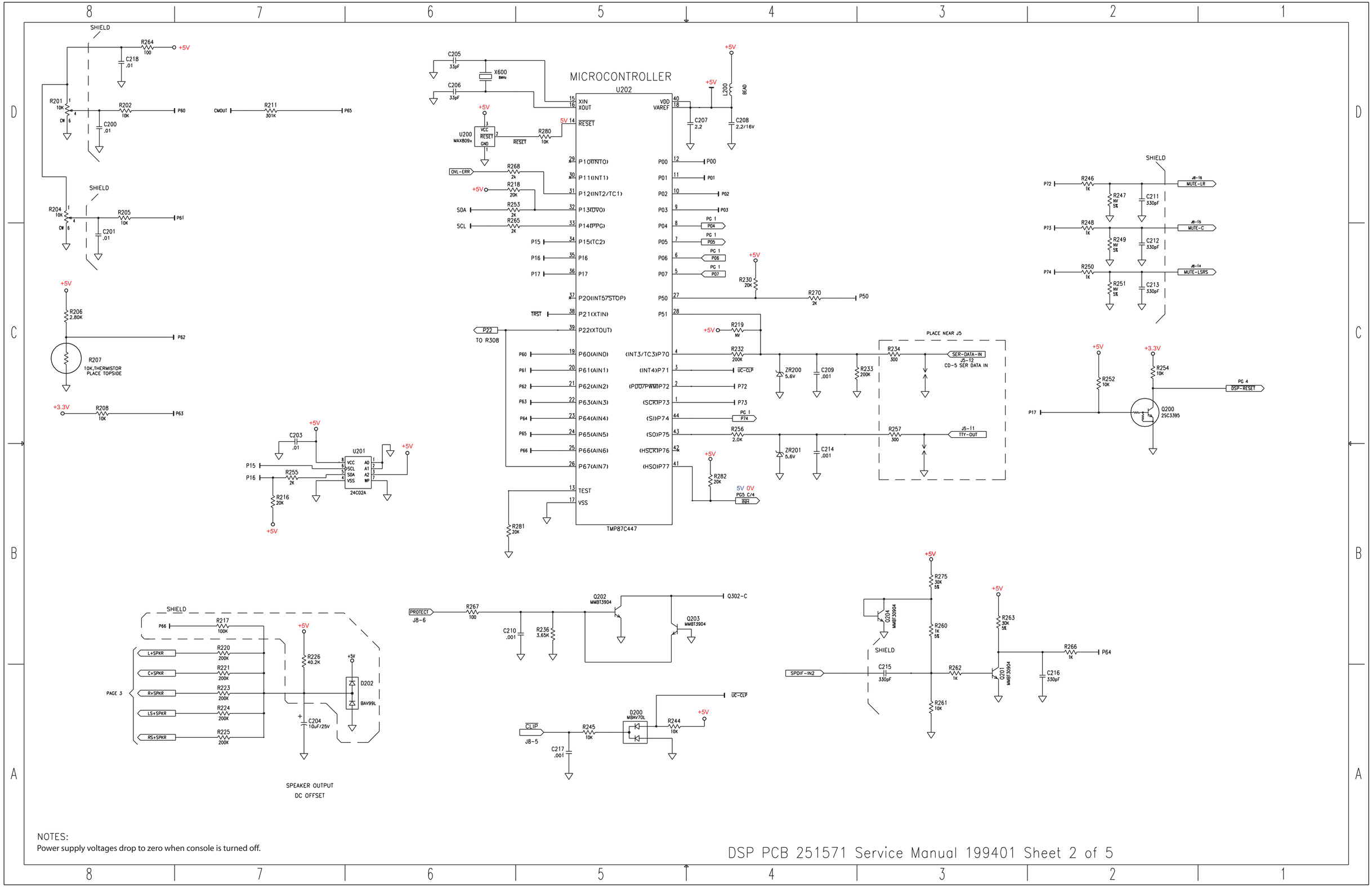

NOTES:
Power supply voltages drop to zero when console is turned off.

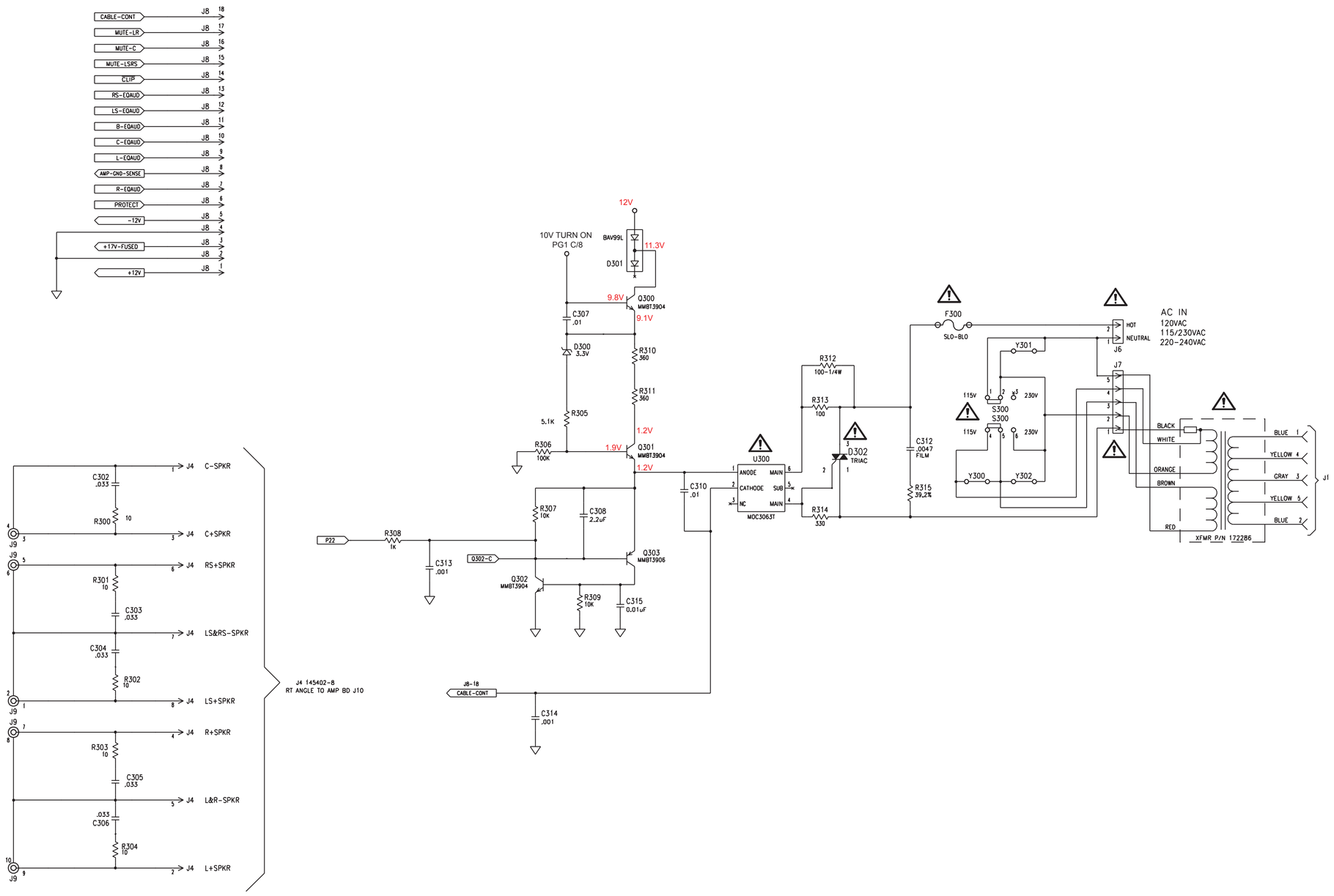

NOTES:
Power supply voltages drop to zero when console is turned off.

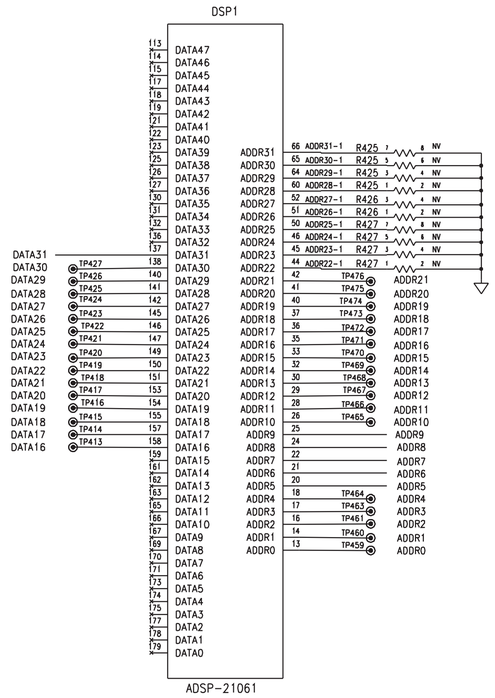

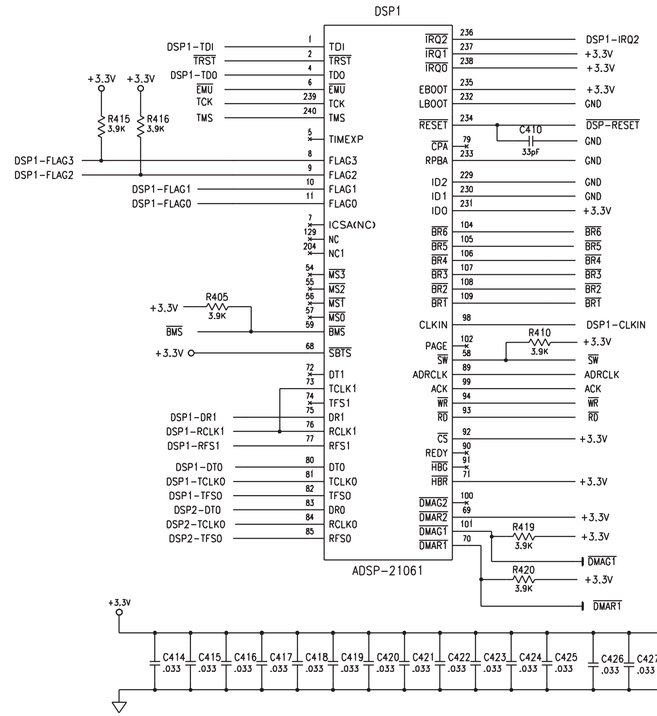

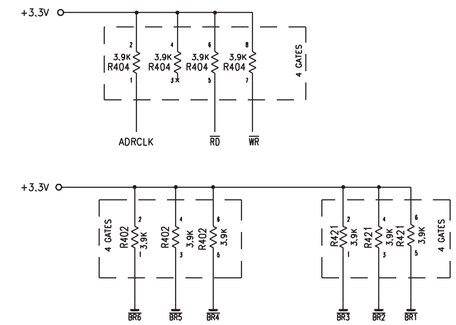

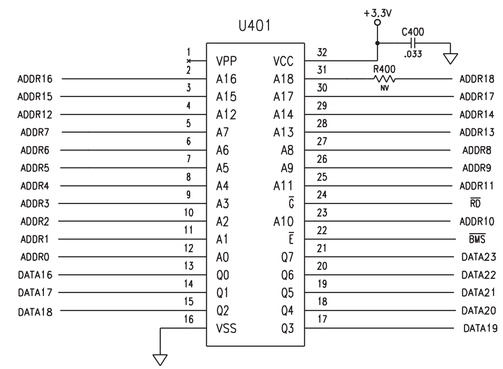

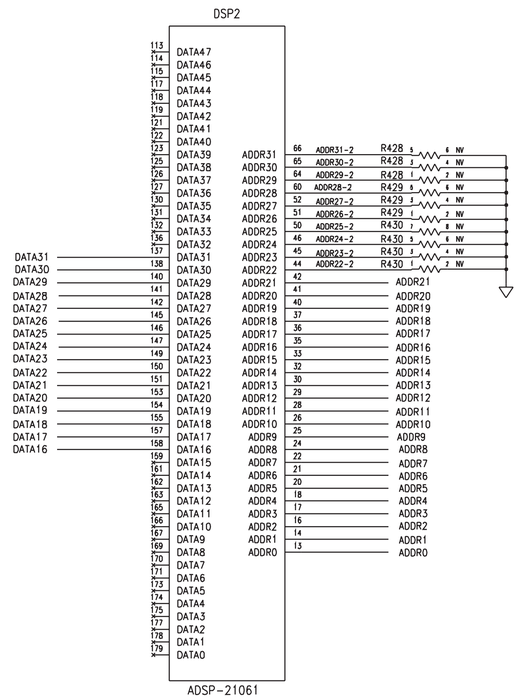

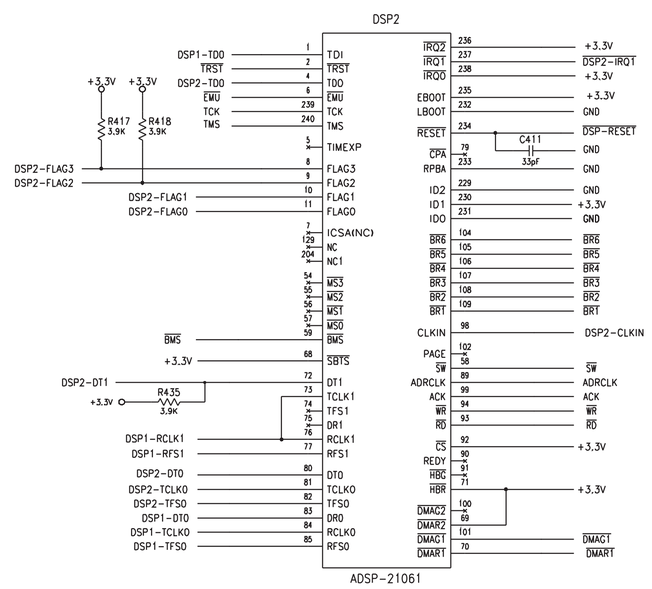

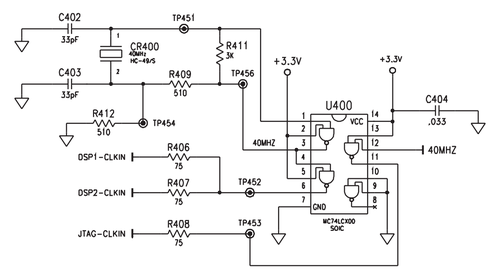

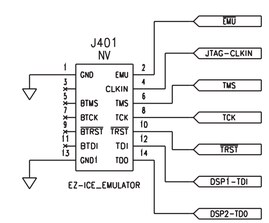

NOTES:
Power supply voltages drop to zero when console is turned off.

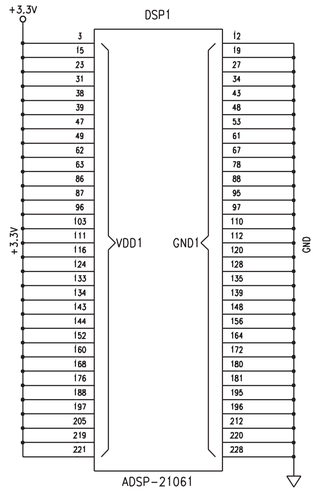

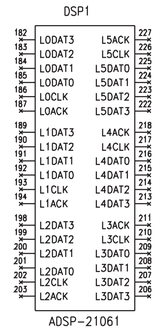

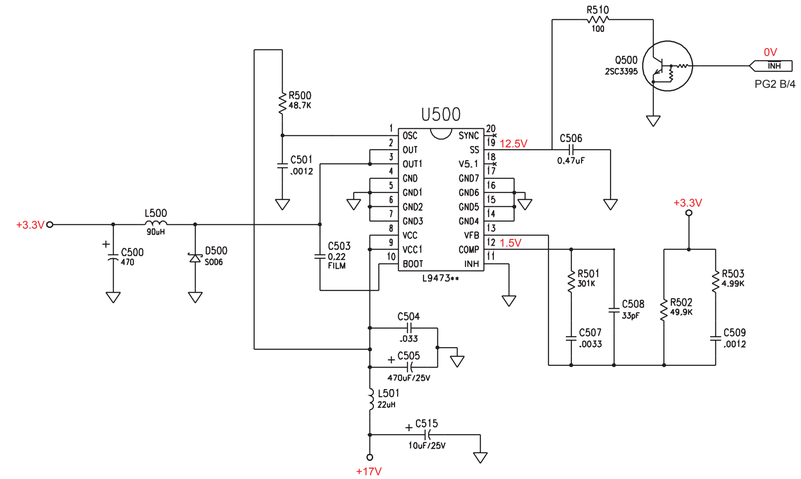

NOTE - At power down, 5V will be present at the base of Q500 for approximately 5 seconds to allow pin 19 of U500 to be pulled low, shutting off the regulator. The 3.3V supply is turned off as part of the normal power down sequence.

+17V-FUSED — FROM J8-3

+3.3V

GND

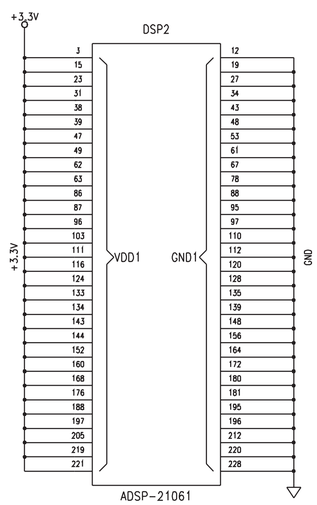

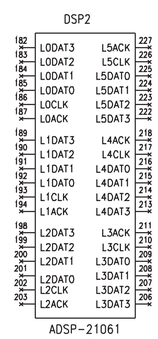

NOTES:
Power supply voltages drop to zero when console is turned off.

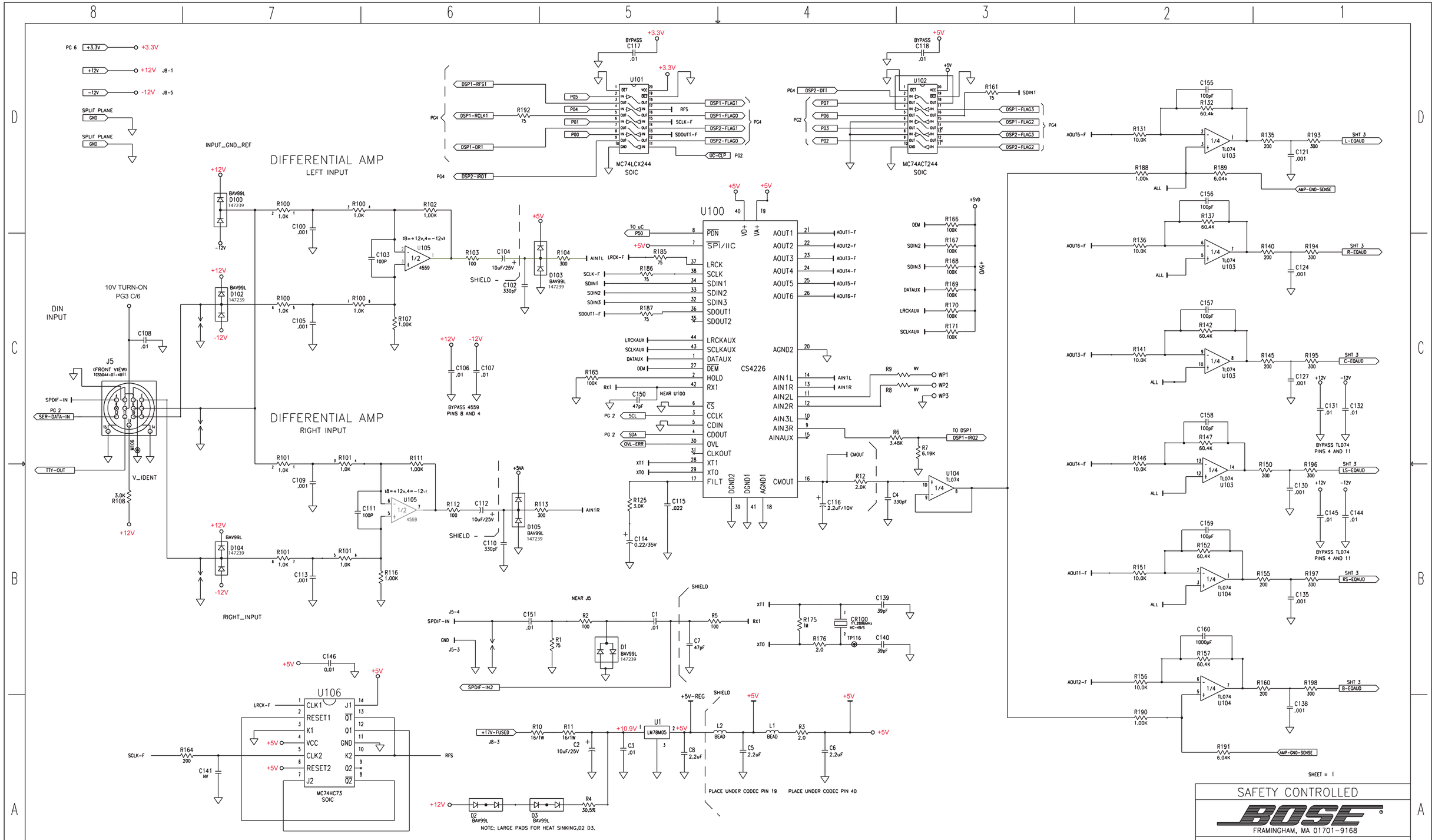

SAFETY CONTROLLED

BOSE

FRAMINGHAM, MA 01701-9168

AM-25/30P Series II
DSP PCB Assembly
Part Number 251571

NOTES:
Power supply voltages drop to zero when console is turned off.

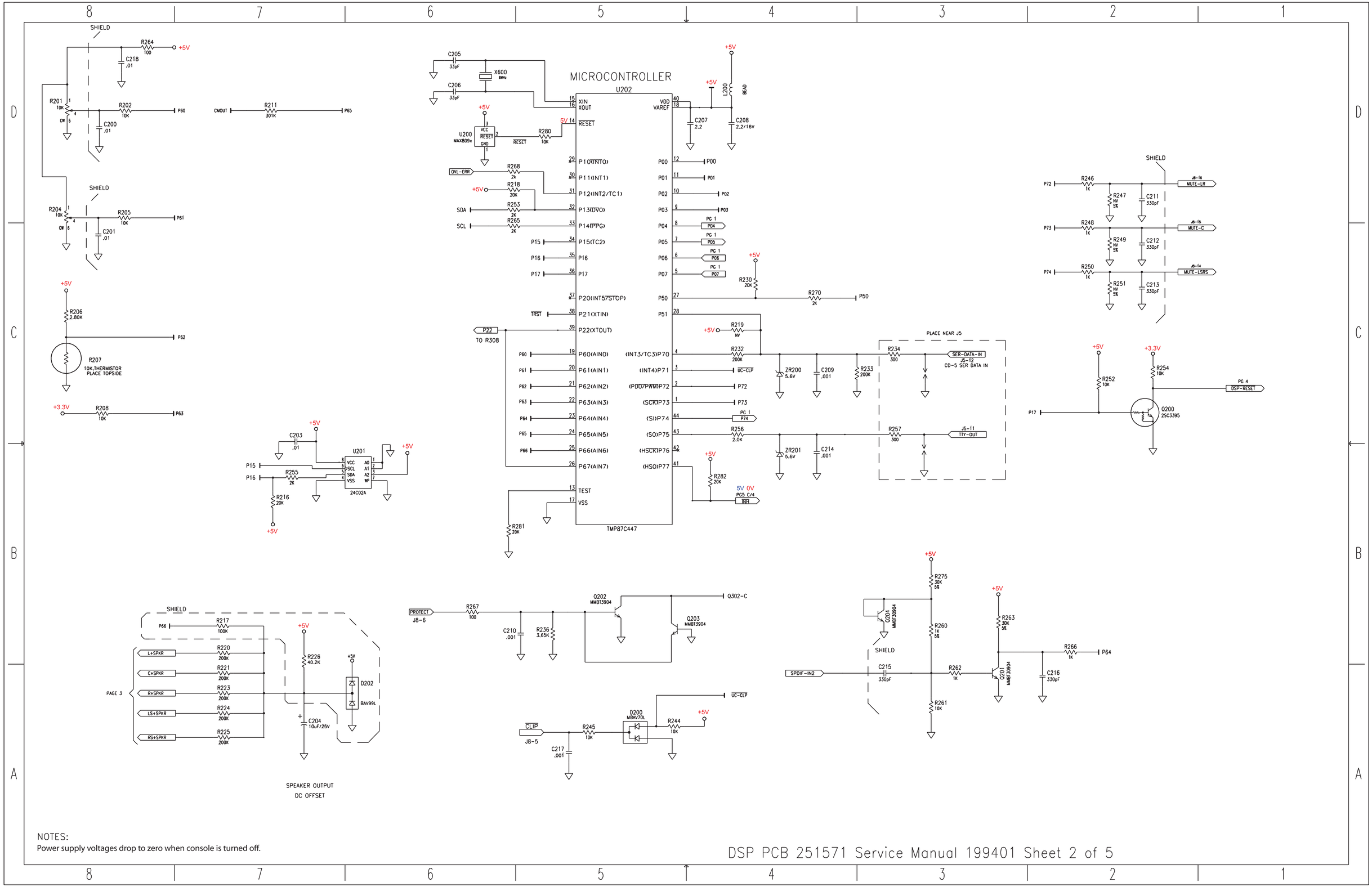

NOTES:
Power supply voltages drop to zero when console is turned off.

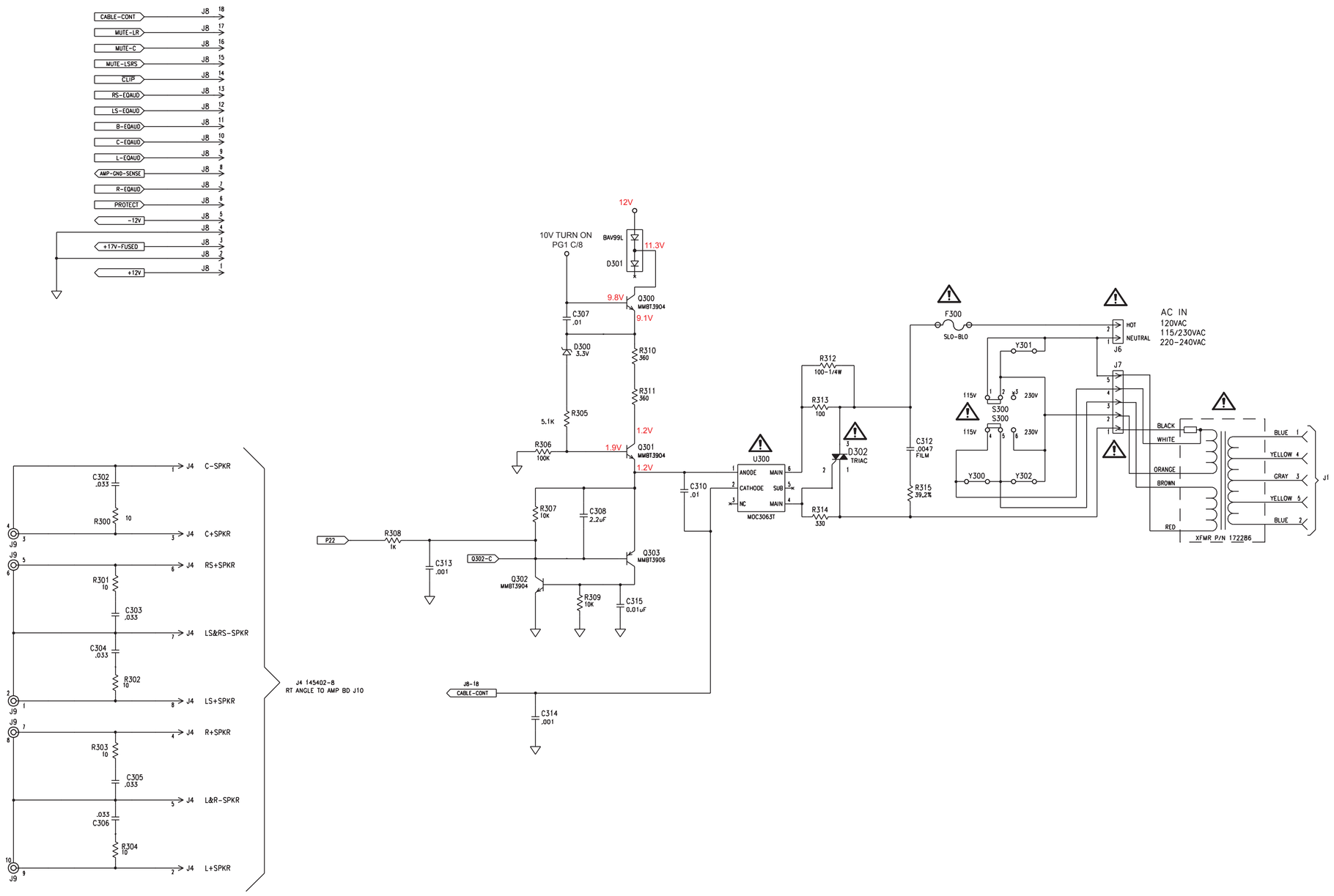

NOTES:
Power supply voltages drop to zero when console is turned off.

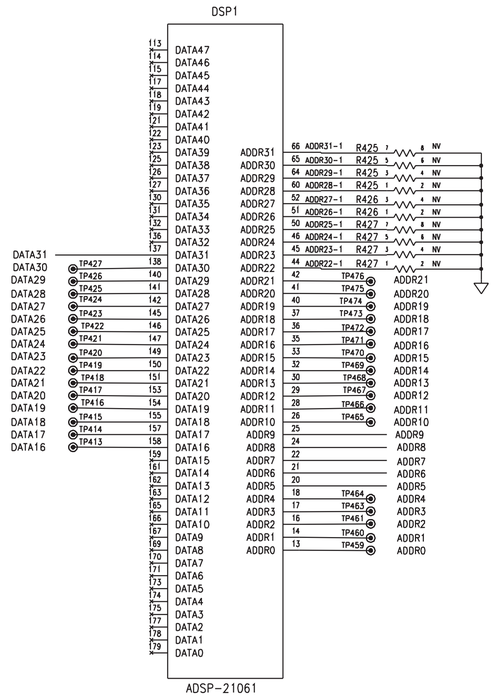

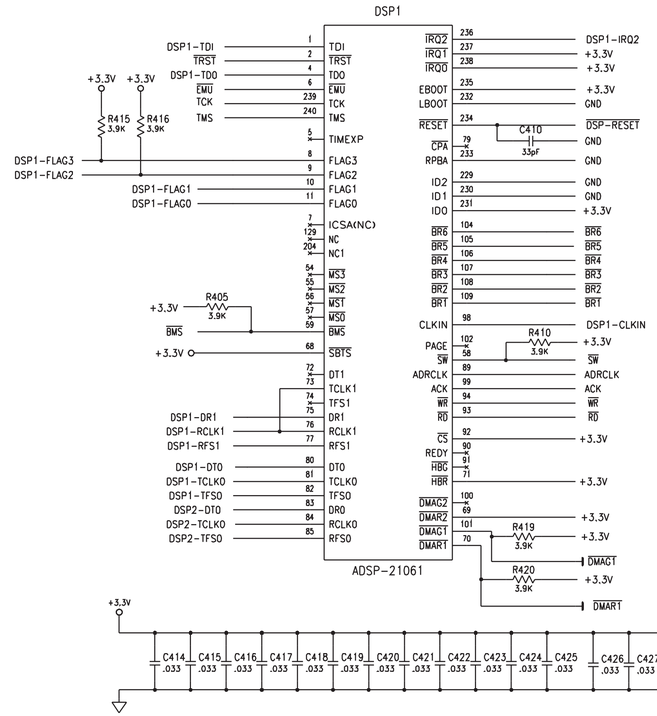

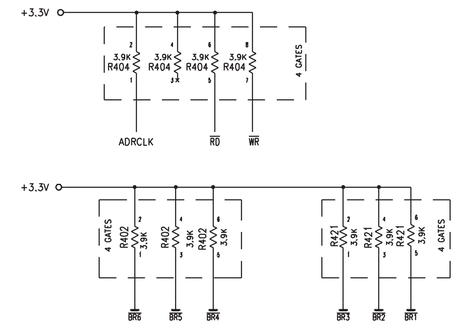

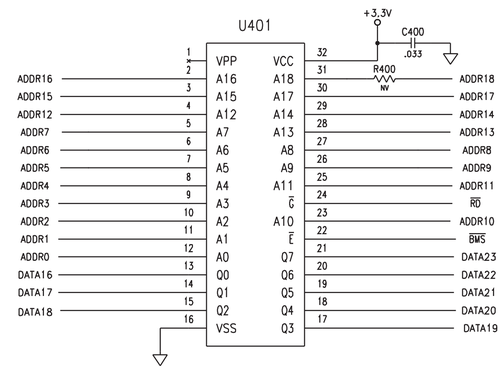

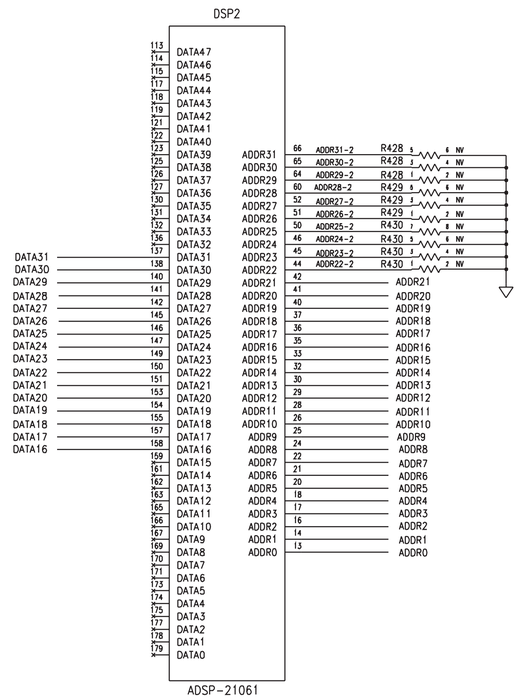

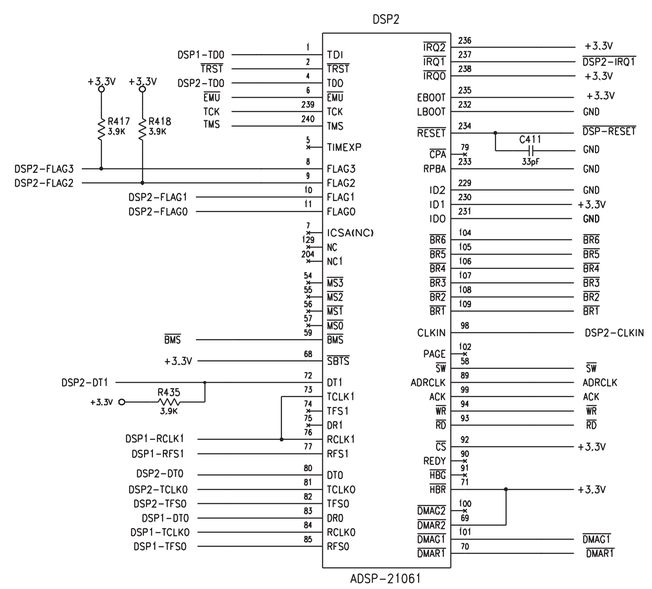

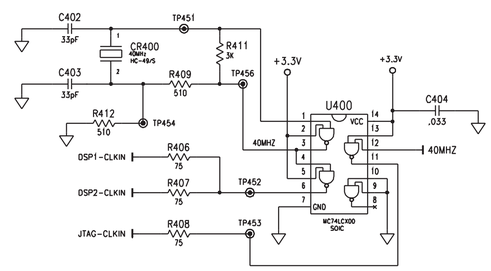

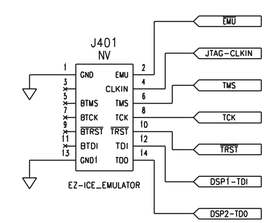

NOTES:
Power supply voltages drop to zero when console is turned off.

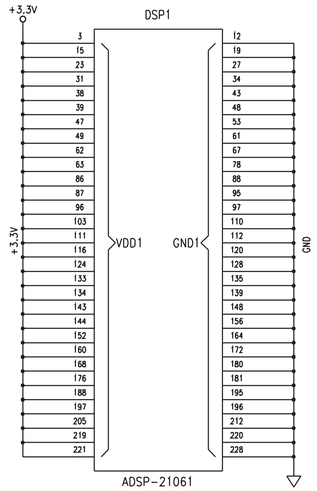

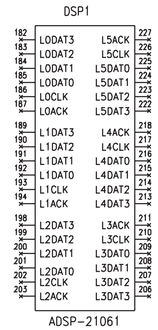

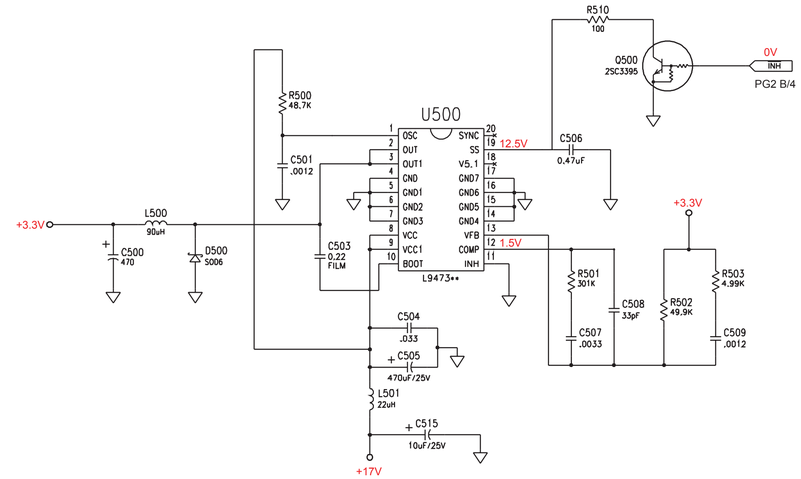

NOTE - At power down, 5V will be present at the base of Q500 for approximately 5 seconds to allow pin 19 of U500 to be pulled low, shutting off the regulator. The 3.3V supply is turned off as part of the normal power down sequence.

+17V-FUSED — FROM J8-3

+3.3V

GND

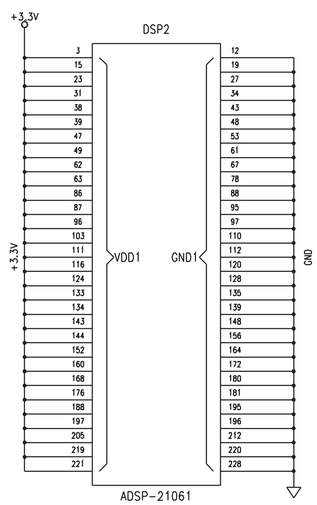

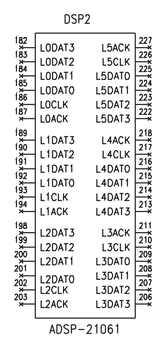

NOTES:
Power supply voltages drop to zero when console is turned off.

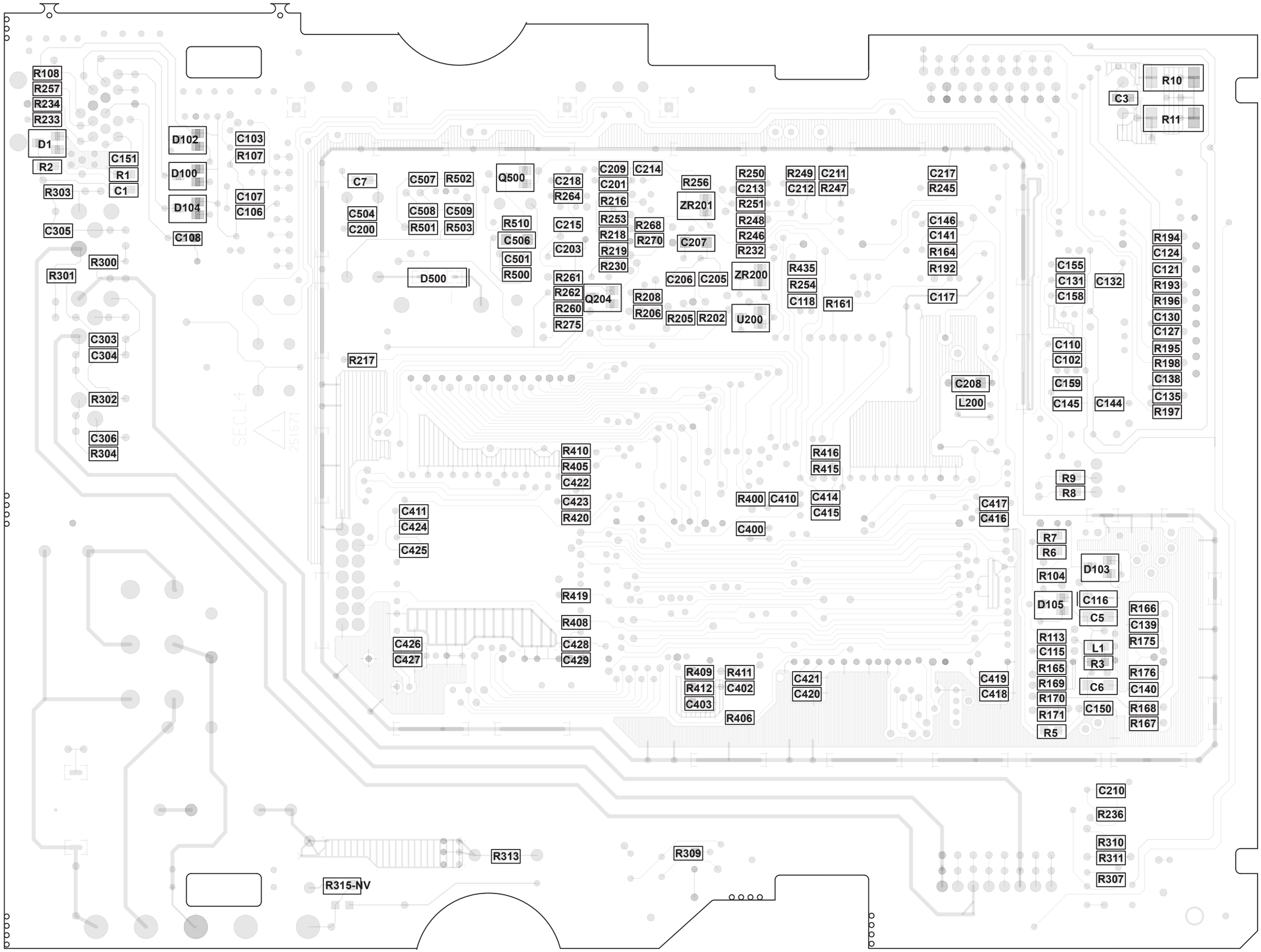
R108
R257
R234
R233
D1
R2
R303
C151
R1
C1
D102
D100
D104
C108
C103
R107
C107
C106
C305
R300
R301
C303
C304
R302
C306
R304
SEC L 4
251571
C7
C504
C200
C507
R502
C508
C509
R501
R503
Q500
R510
C506
C501
R500
D500
C218
R264
C215
C203
R261
R262
R260
R275
Q204
C209
C201
R216
R253
R218
R219
R230
C214
R268
R270
R256
ZR201
C207
C206
C205
ZR200
R208
R206
R205
R202
U200
R250
C213
R251
R248
R246
R232
R249
C212
C211
R247
R435
R254
C118
R161
C217
R245
C146
C141
R164
R192
C117
C208
L200
C155
C131
C158
C132
C110
C102
C159
C145
C144
R194
C124
C121
R193
R196
C130
C127
R195
R198
C138
C135
R197
R217
R410
R405
C422
C423
R420
C411
C424
C425
R419
R408
C428
C429
C426
C427
R409
R412
C403
R411
C402
R406
C421
C420
R400
C410
C400
C414
C415
R416
R415
C417
C416
C419
C418
R9
R8
R7
R6
R104
D103
D105
C116
C5
R113
C115
R165
R169
R170
R171
R5
L1
R3
C6
C150
R166
C139
R175
R176
C140
R168
R167
R10
C3
R11
C210
R236
R310
R311
R307
R313
R309
R315-NV

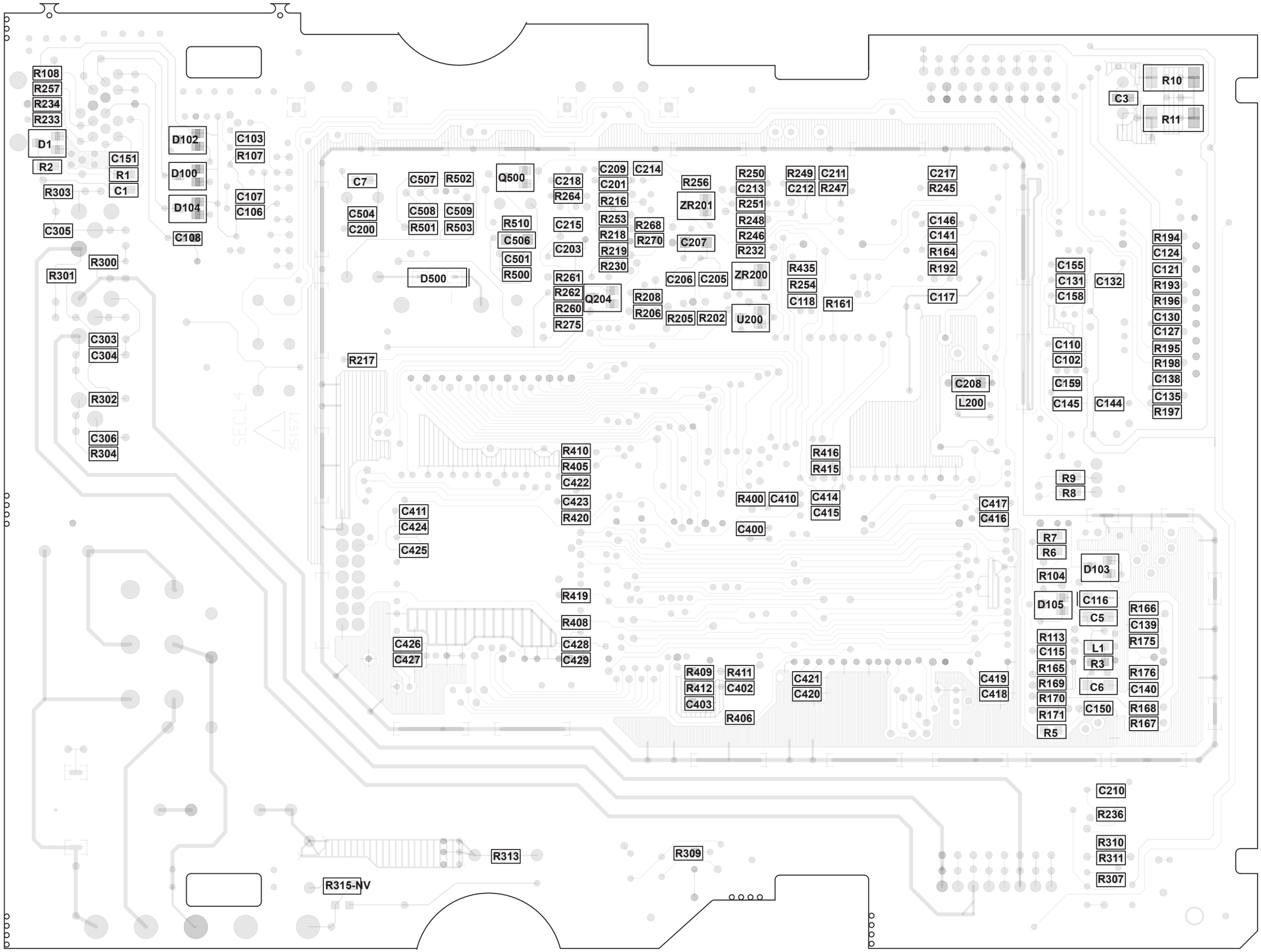
R108
R257
R234
R233
D1
R2
R303
C151
R1
C1
D102
D100
D104
C108
C103
R107
C107
C106
C305
R300
R301
C303
C304
R302
C306
R304
SEC L 4
251571
C7
C504
C200
C507
R502
C508
C509
R501
R503
Q500
R510
C506
C501
R500
D500
C218
R264
C215
C203
R261
R262
R260
R275
Q204
C209
C201
R216
R253
R218
R219
R230
C214
R268
R270
R256
ZR201
C207
C206
C205
ZR200
R208
R206
R205
R202
U200
R250
C213
R251
R248
R246
R232
R249
C212
C211
R247
R435
R254
C118
R161
C217
R245
C146
C141
R164
R192
C117
C208
L200
C155
C131
C158
C132
C110
C102
C159
C145
C144
R194
C124
C121
R193
R196
C130
C127
R195
R198
C138
C135
R197
R217
R410
R405
C422
C423
R420
C411
C424
C425
R419
R408
C428
C429
C426
C427
R409
R412
C403
R411
C402
R406
C421
C420
R400
C410
C400
C414
C415
R416
R415
C417
C416
C419
C418
R9
R8
R7
R6
R104
D103
D105
C116
C5
R113
C115
R165
R169
R170
R171
R5
L1
R3
C6
C150
R166
C139
R175
R176
C140
R168
R167
R10
C3
R11
C210
R236
R310
R311
R307
R313
R309
R315-NV

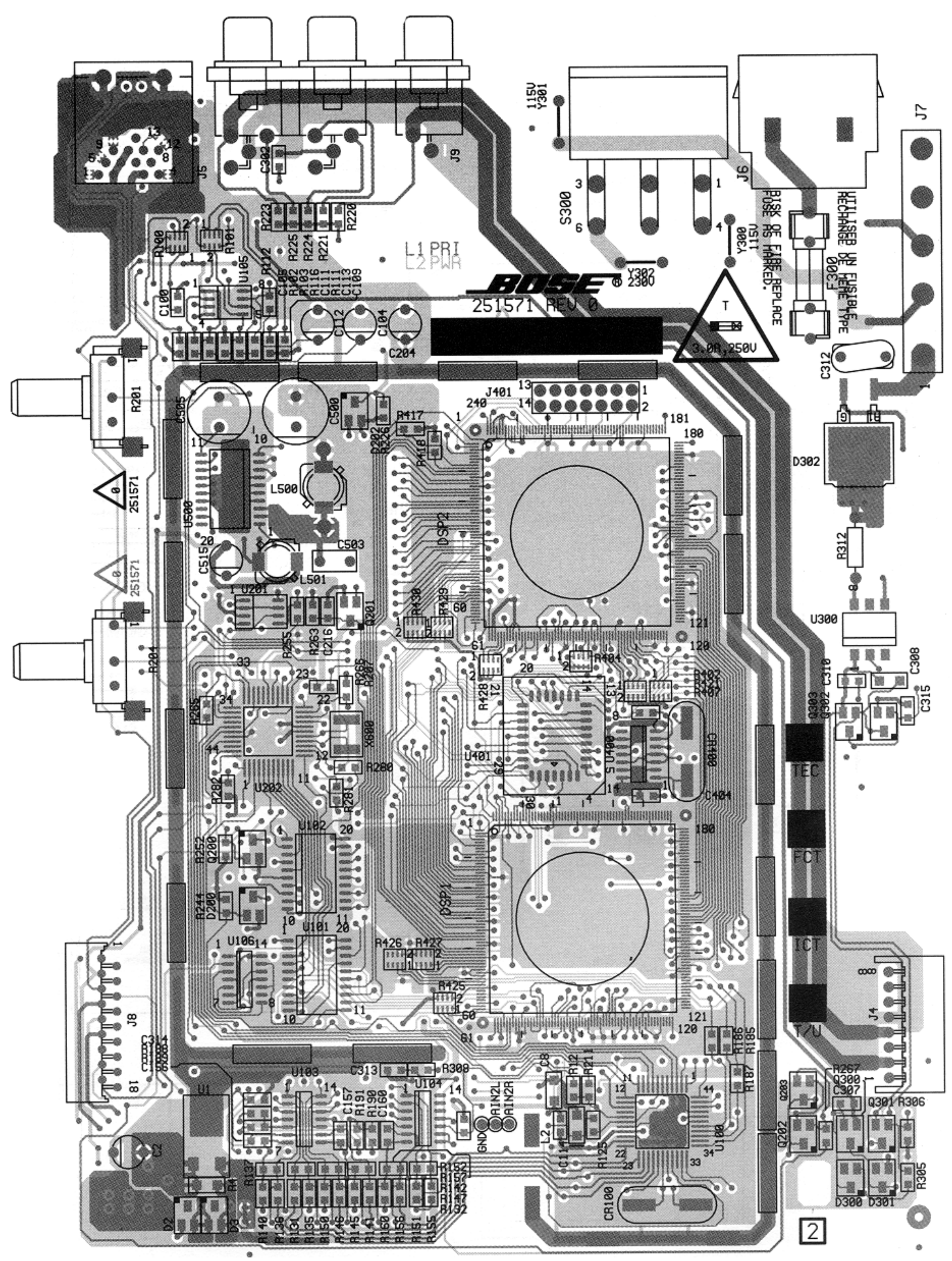 BOSE
251571 REV 0
L1 PRI
L2 PWR
3.0A,250V
T
RISK OF FIRE REPLACE FUSE AS MARKED.
UTILISER UN FUSIBLE RECHANGE DE MEME TYPE
F300
J7
J6
S300
Y300 115V
Y301 115V
Y302 230V
J9
J5
C302
R220
R221
R224
R225
R223
R100
R101
U105
R112
C100
C105
R102
R103
R116
C111
R111
C113
C109
C12
C104
C204
C312
D302
R312
U300
C308
C310
C315
Q302
Q303
TEC
FCT
ICT
T/U
J4
R201
R204
C505
C500
R417
D202
R226
R418
J401
240
181
180
121
120
DSP2
DSP1
L500
L501
C503
C515
U500
U201
R255
R263
C216
Q201
R430
R429
R428
R404
R402
R121
R407
U400
U401
C400
C404
R265
R266
R207
X600
R280
R281
R282
U202
R252
Q200
R244
D200
U102
U101
U106
R426
R427
R425
J8
C314
U1
C2
R4
D2
D3
U103
U104
C313
R308
C157
R191
R190
C160
GND
AIN2L
AIN2R
C8
R12
R211
L2
C11
R125
U100
R186
R185
R187
R267
Q300
C307
Q301
R306
Q203
Q202
R305
D300
D301
CR100
R137
R152
R157
R142
R147
R132
R140
R136
R131
R135
R150
R146
R145
R141
R160
R156
R151
R155
2
251571
0

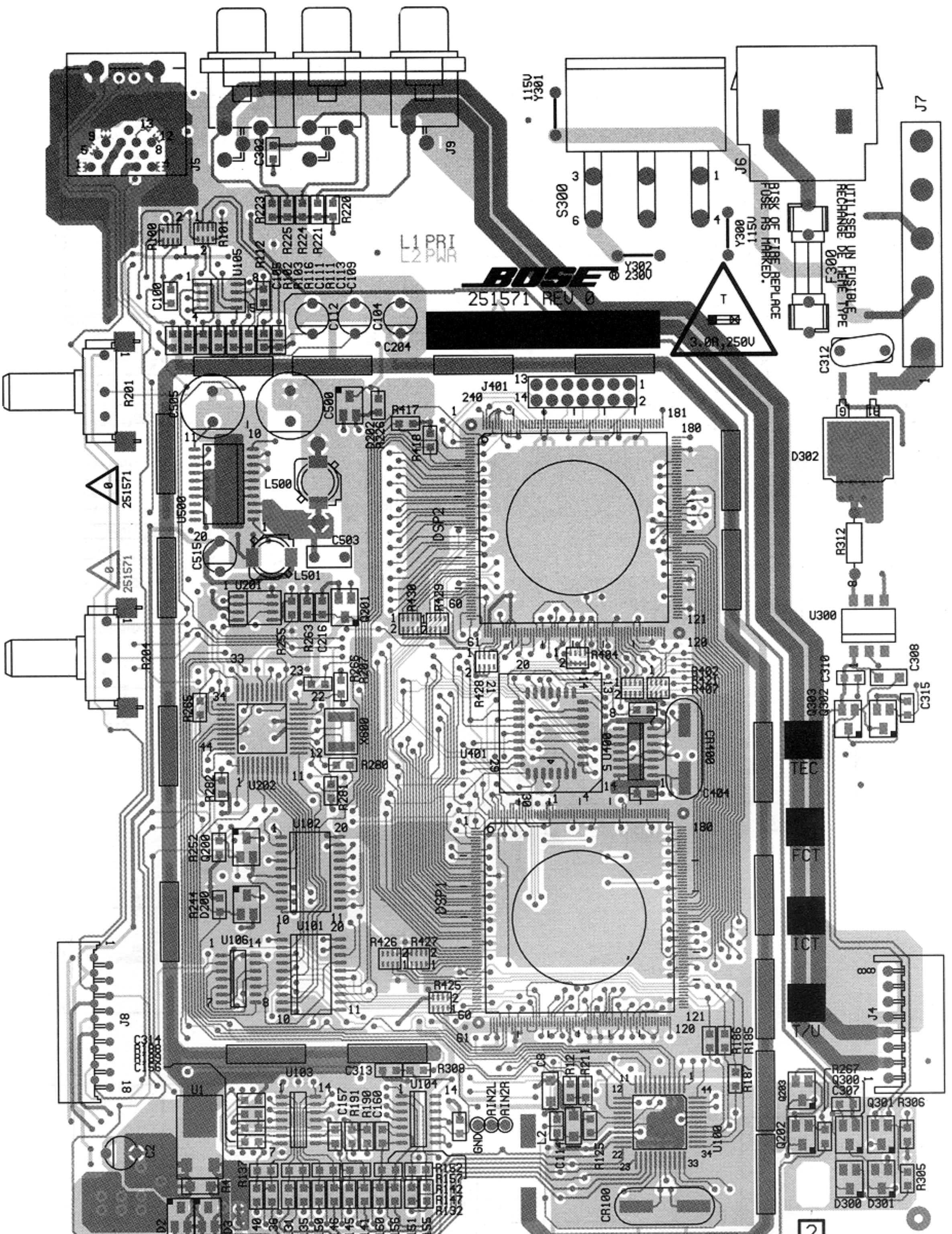
BOSE
251571 REV 0
L1 PRI
L2 PWR
3.0A,250V
T
RISK OF FIRE REPLACE FUSE AS MARKED.
UTILISER UN FUSIBLE RECHANGE DE MEME TYPE
F300
J7
J6
S300
Y300 115V
Y301 115V
Y302 230V
J9
J5
C302
R220
R221
R224
R225
R223
R100
R101
U105
R112
C100
C104
C112
C204
C312
J401
D302
R312
U300
C308
C310
C315
Q302
Q303
TEC
FCT
ICT
T/U
J4
DSP1
DSP2
U400
U401
CR400
C404
X600
U202
U102
U101
U106
J8
U103
U104
C313
R308
U1
C2
D2
D3
R4
U100
CR100
C8
L2
R125
AIN2L
AIN2R
GND
Q202
Q203
Q300
Q301
R305
R306
D300
D301
R267
C307
R185
R186
R187
R201
R204
C505
C500
U500
L500
L501
C503
C515
U201
Q201
R255
R263
C216
R265
R207
R285
R280
R281
R282
R252
Q200
R244
D200
R426
R427
R425
R428
R429
R430
R404
R402
R421
R407
R417
R418
D202
R226
251571
2

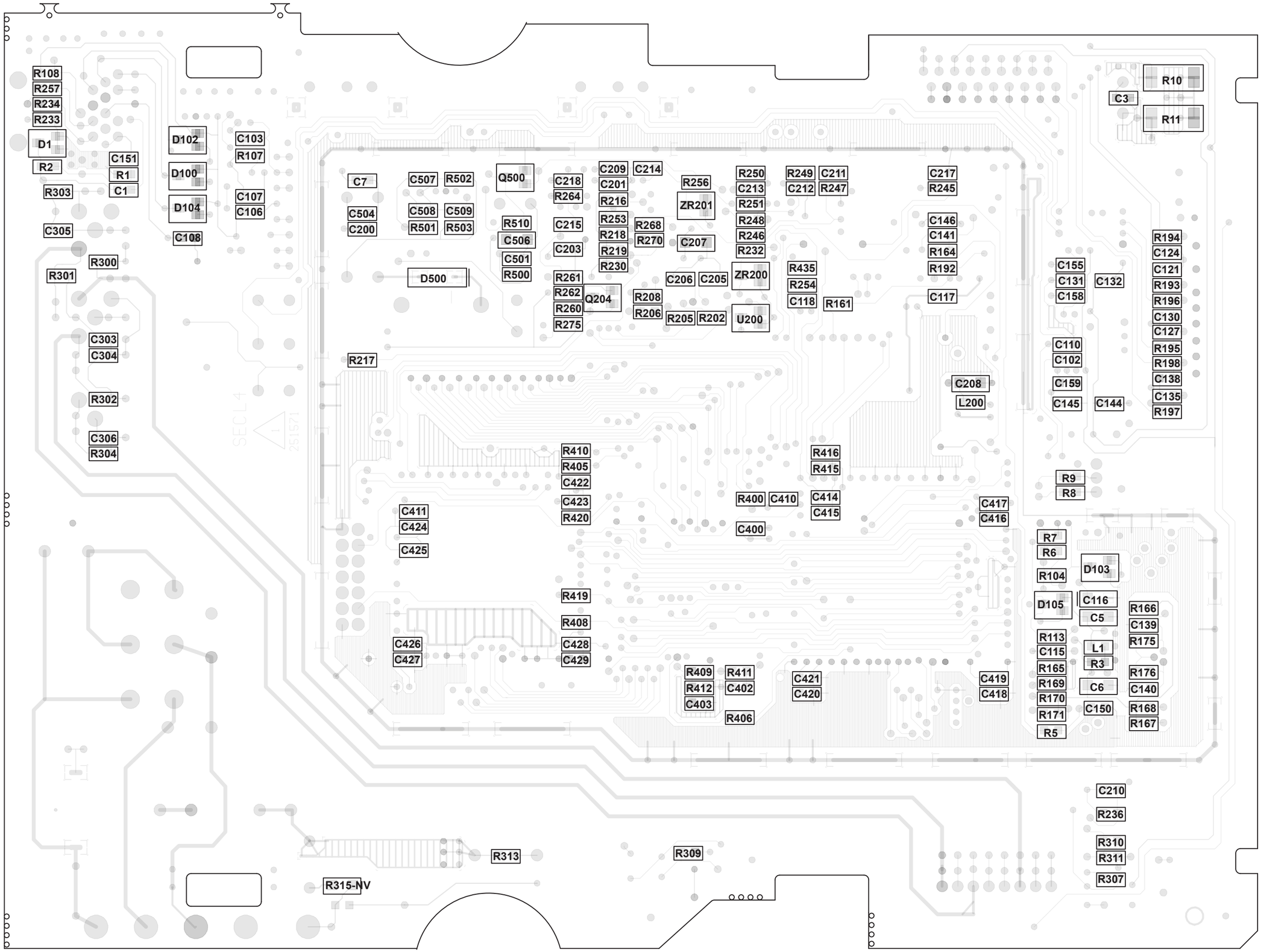
R108
R257
R234
R233
D1
R2
R303
C151
R1
C1
D102
D100
D104
C108
C103
R107
C107
C106
C305
R300
R301
C303
C304
R302
C306
R304
SEC L 4
251571
C7
C504
C200
C507
R502
C508
C509
R501
R503
Q500
R510
C506
C501
R500
D500
C218
R264
C215
C203
R261
R262
R260
R275
Q204
C209
C201
R216
R253
R218
R219
R230
C214
R268
R270
R256
ZR201
C207
C206
C205
ZR200
R208
R206
R205
R202
U200
R250
C213
R251
R248
R246
R232
R249
C212
C211
R247
R435
R254
C118
R161
C217
R245
C146
C141
R164
R192
C117
C208
L200
C155
C131
C158
C132
C110
C102
C159
C145
C144
R194
C124
C121
R193
R196
C130
C127
R195
R198
C138
C135
R197
R217
R410
R405
C422
C423
R420
C411
C424
C425
R419
R408
C428
C429
C426
C427
R409
R412
C403
R411
C402
R406
C421
C420
R400
C410
C400
C414
C415
R416
R415
C417
C416
C419
C418
R9
R8
R7
R6
R104
D103
D105
C116
C5
R113
C115
R165
R169
R170
R171
R5
L1
R3
C6
C150
R166
C139
R175
R176
C140
R168
R167
R10
C3
R11
C210
R236
R310
R311
R307
R313
R309
R315-NV

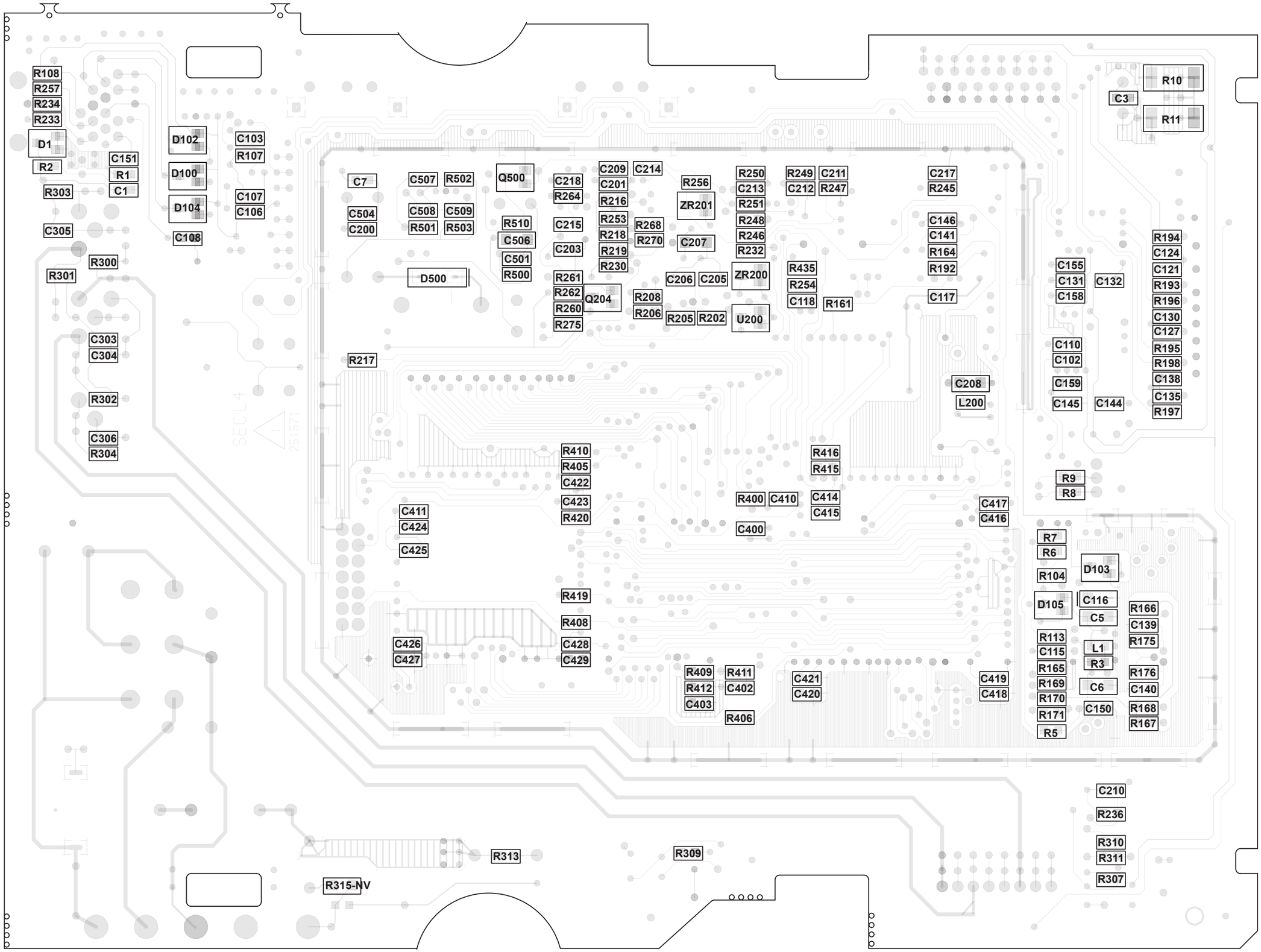
R108
R257
R234
R233
D1
R2
R303
C151
R1
C1
D102
D100
D104
C108
C103
R107
C107
C106
C305
R300
R301
C303
C304
R302
C306
R304
SEC L 4
251571
C7
C504
C200
C507
R502
C508
C509
R501
R503
Q500
R510
C506
C501
R500
D500
C218
R264
C215
C203
R261
R262
R260
R275
Q204
C209
C201
R216
R253
R218
R219
R230
C214
R268
R270
R256
ZR201
C207
C206
C205
ZR200
R208
R206
R205
R202
U200
R250
C213
R251
R248
R246
R232
R249
C212
C211
R247
R435
R254
C118
R161
C217
R245
C146
C141
R164
R192
C117
C208
L200
C155
C131
C158
C132
C110
C102
C159
C145
C144
R194
C124
C121
R193
R196
C130
C127
R195
R198
C138
C135
R197
R217
R410
R405
C422
C423
R420
C411
C424
C425
R419
R408
C428
C429
C426
C427
R409
R412
C403
R411
C402
R406
C421
C420
R400
C410
C400
C414
C415
R416
R415
C417
C416
C419
C418
R9
R8
R7
R6
R104
D103
D105
C116
C5
R113
C115
R165
R169
R170
R171
R5
L1
R3
C6
C150
R166
C139
R175
R176
C140
R168
R167
R10
C3
R11
C210
R236
R310
R311
R307
R313
R309
R315-NV

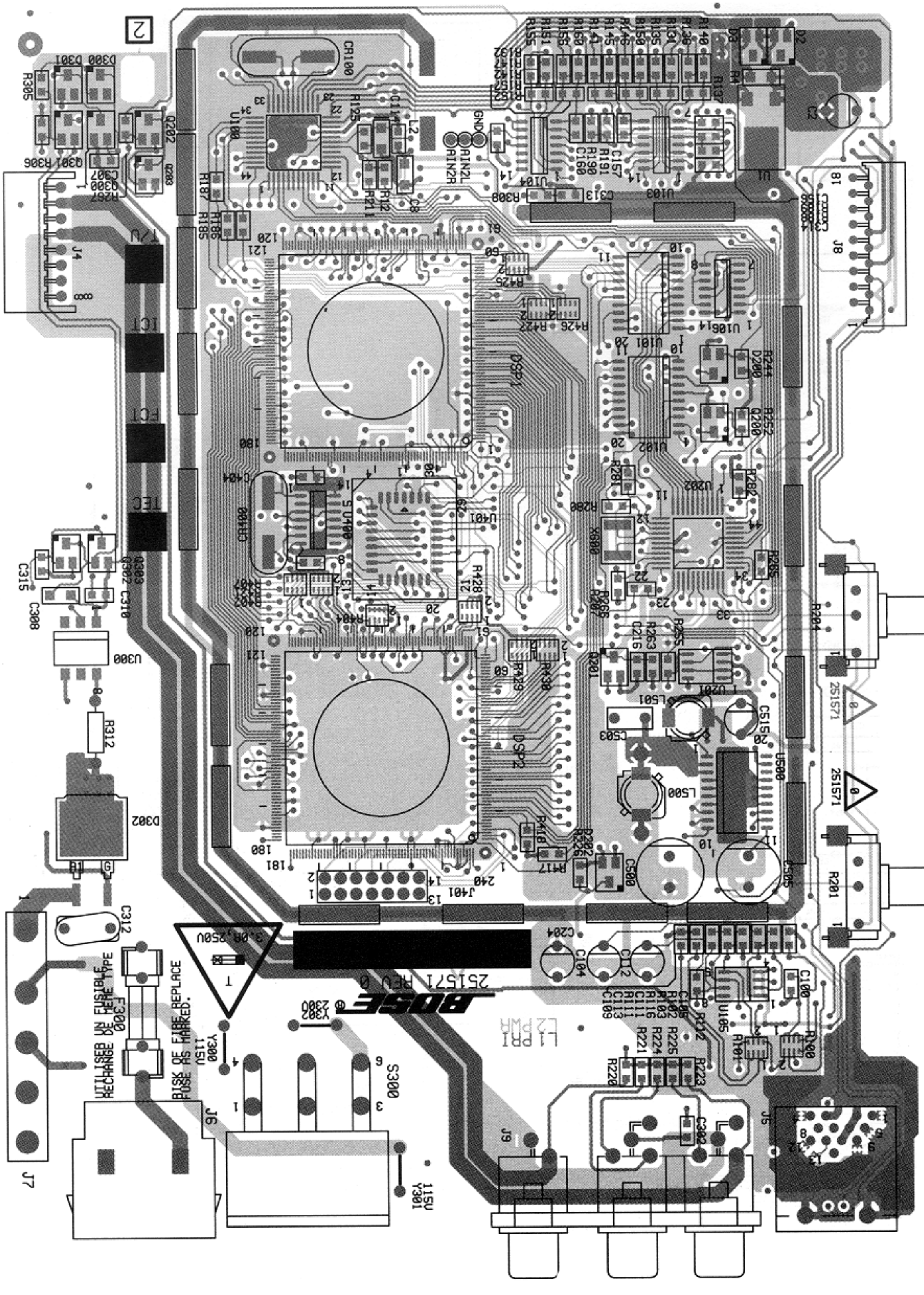
2
251571 REV 0
BOSE
L1 PRI
L2 PWR
3.0A,250V
RISK OF FIRE REPLACE FUSE AS MARKED.
UTILISER UN FUSIBLE RECHANGE DE MEME TYPE
F300
S300
115V
230V
Y300
Y301
Y302
J4
J5
J6
J7
J8
J9
J401
DSP1
DSP2
U400
U401
U100
U101
U102
U103
U104
U105
U106
U201
U202
U300
U500
U1
CR100
CR400
X600
LS00
LS01
C500
C505
C515
C503
C204
C104
C112
C100
C312
D302
R312
R201
R204
T/U
ICT
FCT
TEC
GND
AIN2L
AIN2R