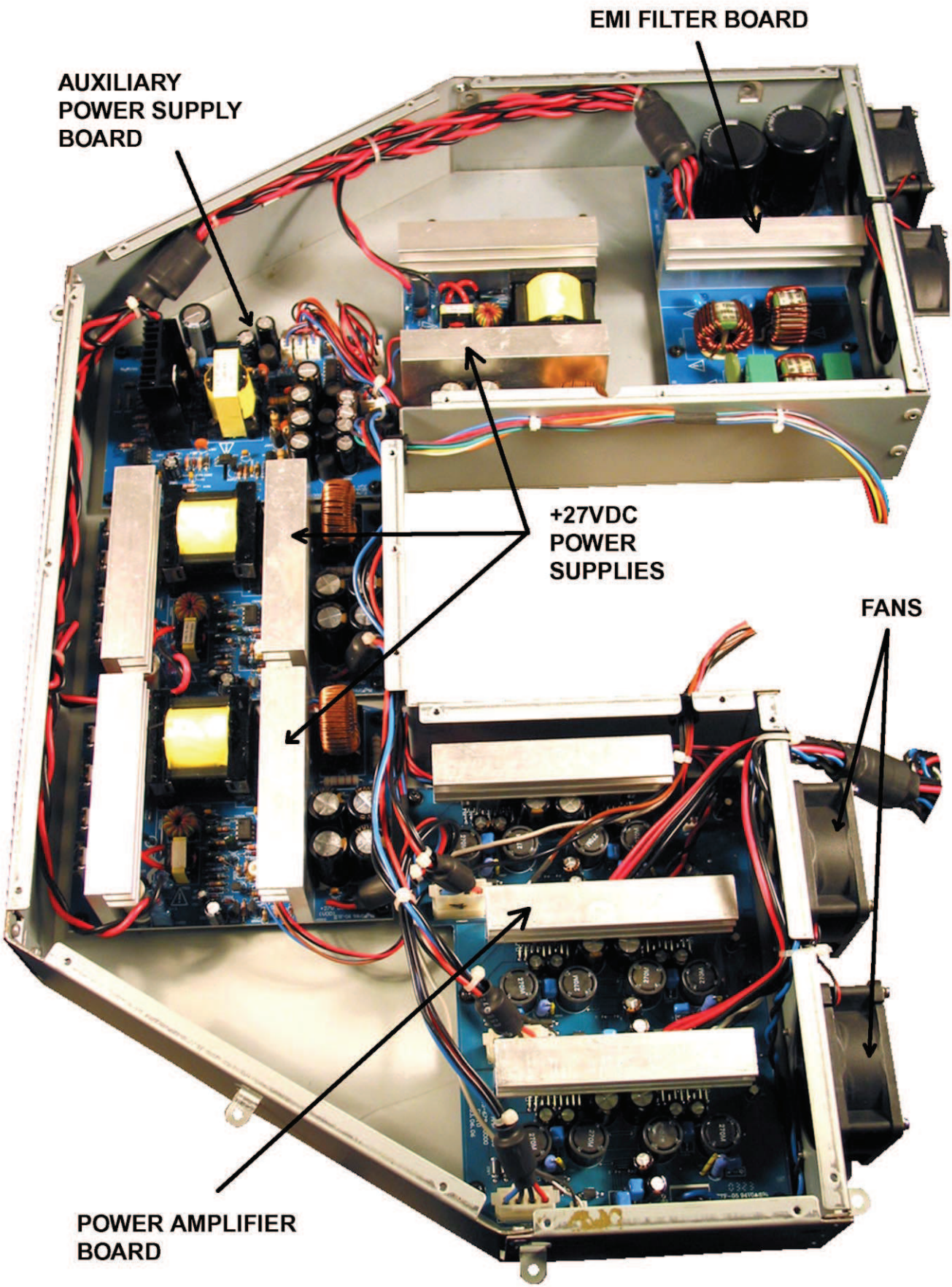

Figure 9. PS1 Power Stand Electronics Module with Top Cover Removed

Disassembly Procedures

Power Stand Procedures

Note: Refer to Figure 9 for the following procedures.

1. Lower Housing Removal

1.1 Place the power stand on a soft surface so that the line array opening faces down.

1.2 Using a Phillips-head screwdriver, remove the 19 screws that secure the lower housing to the upper housing. Lift off the lower housing.

2. Amplifier Housing Removal

2.1 Perform procedure 1.

2.2 Make a note of the wiring, and disconnect the wiring harnesses and connectors that run to the amplifier housing. The amplifier housing is the large metal box with the four fans.

2.3 Using a Phillips-head screwdriver, remove the four screws that secure the power stand base plate to the bottom of the line array cavity. Lift it off of the cavity. Be careful not to damage any wires.

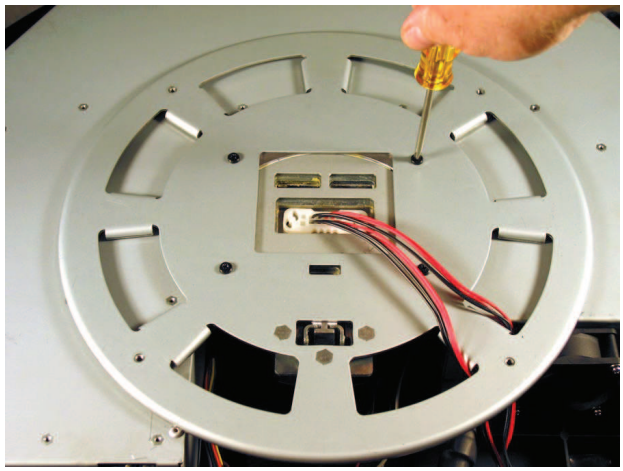

2.4 Once all of the wiring is disconnected, use a Phillips-head screwdriver to remove the 16 screws that secure the amplifier housing to the power stand upper housing. Carefully lift the amplifier housing out of the power stand upper housing.

3. Line Array Cavity Removal

3.1 Perform procedure 2.

3.2 Using a Phillips-head screwdriver, remove the three screws that secure the line array cavity to the upper housing. Lift the line array cavity off of the upper housing. The power stand foot pedal will disengage from the shaft.

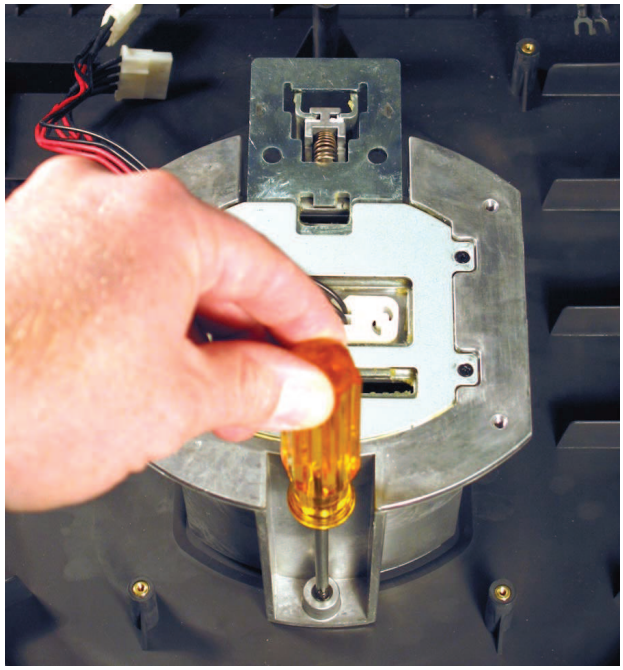

Disassembly Procedures

4. Amplifier PCB Removal

4.1 Perform procedure 2.

4.2 Make a note of the wiring and disconnect all of the wiring harnesses that connect the power supply box to the DSP PCB and to the microprocessor PCB.

4.3 Using a Phillips-head screwdriver, remove the 24 screws that secure the power supply box top cover in place. Lift off the top cover.

4.4 Once you have the top cover off, make a note of the wiring configuration and unplug the wiring harnesses that connect to the amplifier PCB.

4.5 Using a Phillips-head screwdriver, remove the 6 screws that secure amplifier PCB in place. Lift the amplifier PCB out of the chassis.

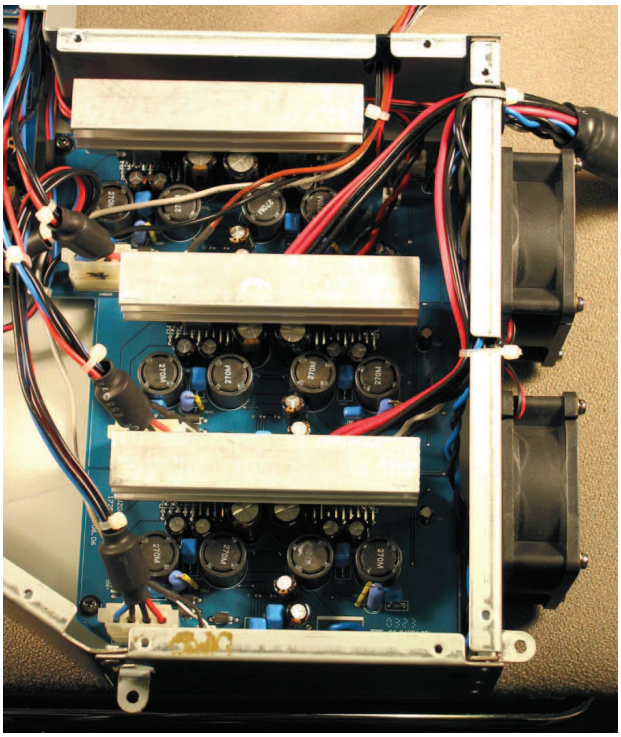

5. Switching DC Power Supply Removal

5.1 Perform procedure 2.

5.2 Make a note of the wiring and disconnect all of the wiring harnesses that connect the power supply box to the DSP PCB and to the microprocessor PCB.

5.3 Using a Phillips-head screwdriver, remove the 24 screws that secure the power supply box top cover in place. Lift off the top cover.

5.4 Once you have the top cover off, make a note of the wiring configuration and unplug the wiring harnesses that connect to the switching DC power supply PCB you wish to remove.

5.5 Using a Phillips-head screwdriver, remove the 4 screws that secure power supply PCB in place. Lift the power supply PCB out of the chassis.

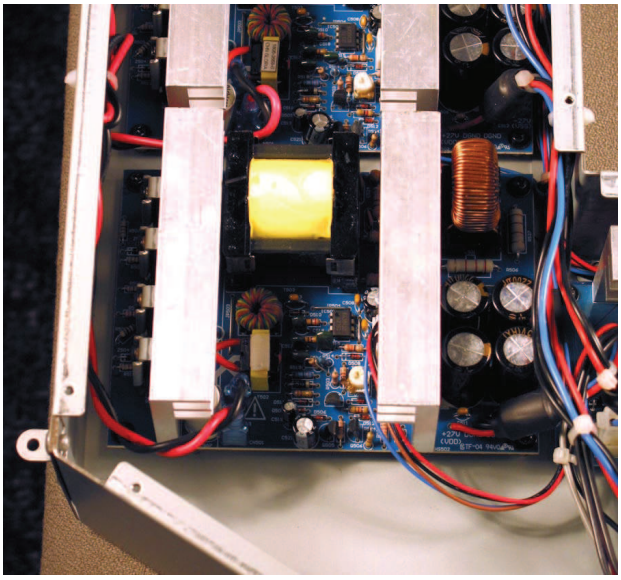

Disassembly Procedures

6. Auxiliary Power Supply Removal

6.1 Perform procedure 2.

6.2 Make a note of the wiring and disconnect all of the wiring harnesses that connect the power supply box to the DSP PCB and to the microprocessor PCB.

6.3 Using a Phillips-head screwdriver, remove the 24 screws that secure the power supply box top cover in place. Lift off the top cover.

6.4 Once you have the top cover off, make a note of the wiring configuration and unplug the wiring harnesses that connect to the switching DC power supply PCB you wish to remove.

6.5 Using a Phillips-head screwdriver, remove the 4 screws that secure power supply PCB in place. Lift the power supply PCB out of the chassis.

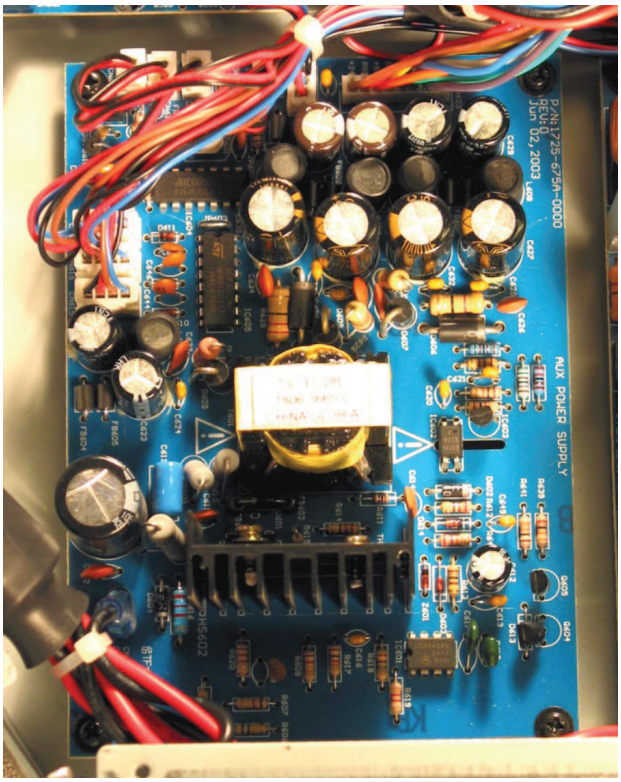

7. EMI Filter PCB Removal

7.1 Perform procedure 2.

7.2 Make a note of the wiring and disconnect all of the wiring harnesses that connect the power supply box to the DSP PCB and to the microprocessor PCB.

7.3 Using a Phillips-head screwdriver, remove the 24 screws that secure the power supply box top cover in place. Lift off the top cover.

7.4 Once you have the top cover off, make a note of the wiring configuration and unplug the wiring harnesses that connect to the EMI Filter PCB.

7.5 Using a Phillips-head screwdriver, remove the 4 screws that secure the EMI Filter PCB in place. Lift the EMI Filter PCB out of the chassis.

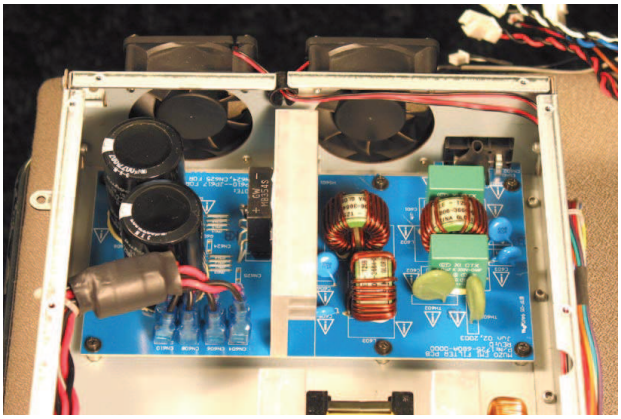

Disassembly Procedures

8. Chassis Fan Removal

8.1 Perform procedure 2.

8.2 Using a Phillips-head screwdriver, remove the 24 screws that secure the power supply box top cover in place. Lift off the top cover.

8.3 Using a Phillips-head screwdriver, remove the 4 screws that secure the fan to the chassis.

8.4 Follow the wire harness for the fan you are removing to the auxiliary power supply PCB and unplug it. Lift the fan out of the chassis.

Re-assembly note: When installing the new fan, be sure to match the orientation of the fan next to it so that it will move air in the proper direction when in use.

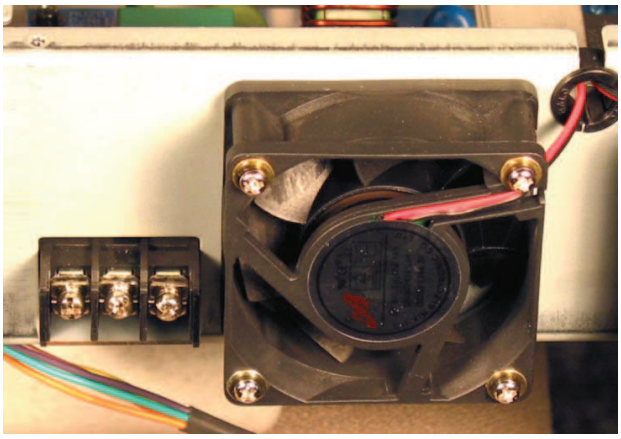

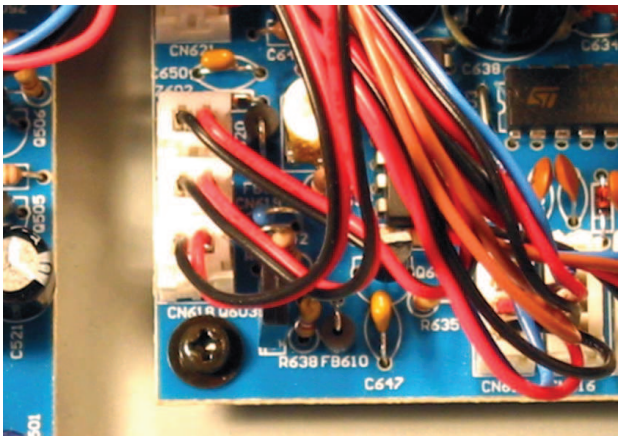

9. Microprocessor PCB Removal

9.1 Perform procedure 1.

9.2 Make a note of the wiring configuration and unplug the six wire harnesses from the connectors on the board.

9.3 Lift the microprocessor PCB off of the connectors that engage it on the bottom of the board and the pins that connect to the preset switches.

Re-assembly note: When re-installing this PCB, be sure that all of the pins from the preset switches are straight and properly engage the connectors on the bottom of the microprocessor PCB.

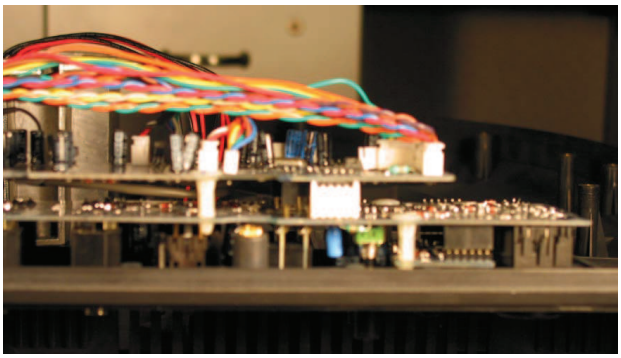

Disassembly Procedures

10. DSP PCB Removal

10.1 Perform procedure 1.

10.2 Make a note of the wiring configuration and unplug the six wire harnesses from the connectors on the board.

10.3 Using a pair of needle-nose pliers, compress the bottoms of the plastic standoff posts used to attach the DSP PCB to the Input/Output PCB. Lift the DSP PCB off of the I/O PCB.

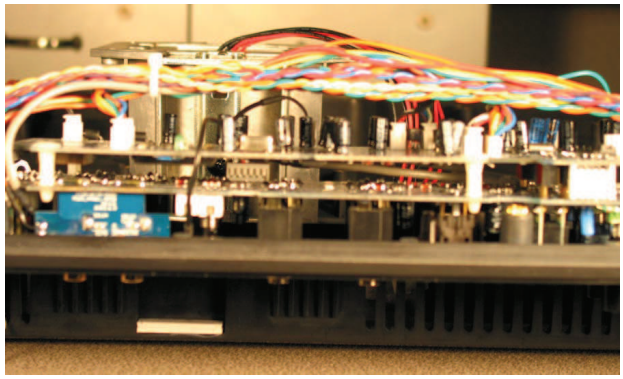

11. Input/Output PCB Removal

11.1 Perform procedures 9 and 10.

11.2 On the front panel of the power stand, remove the four knobs for the mic trim and level controls.

11.3 Using a nut driver, remove the nine nuts and washers for the 1/4 inch phono jacks.

11.4 Using a Phillips-head screwdriver, remove the 16 screws that secure the XLR, Data in/out and Neutrik connectors to the front panel.

11.5 Lift the I/O PCB off of the input panel.

Disassembly Procedures

Line Array Procedures

Note: The line arrays are divided into a lower line array, which plugs directly into the power stand, and an upper line array, which uses a bayonet arrangement to align the upper array to the lower array for connection. All electrical connections are automatically made when the arrays are mounted into the power stand and the upper array is mounted to the lower array.

Note: Refer to Figure 7 for the following procedures.

1. Grille Removal

1.1 Using a Phillips-head screwdriver, remove the six screws that secure the end cap to the line array enclosure. Lift off the end cap. Unplug the molex connector from the speaker harness.

1.2 Grasp the edge of the grille and gently lift it away from the enclosure.

2. Nameplate Removal

2.1 Perform procedure 1.

2.2 On the back of the grille, unbend the legs of the logo. Lift off the nameplate.

3. Driver Removal

3.1 Perform procedure 1.

3.2 Using a Phillips-head screwdriver, remove the four screws that secure the driver to the enclosure.

3.3 Lift the driver out of the enclosure. Note the wiring configuration and cut the wires as close to the driver terminals as possible.

4. Upper Line Array Top End Cap Removal

4.1 Using a Phillips-head screwdriver, remove the seven screws that secure the end cap to the line array enclosure. Lift off the end cap.

Re-assembly note: Make sure that the end cap gasket is properly aligned to achieve an airtight seal.

5. Upper Line Array Bottom End Cap Removal

5.1 Using a Phillips-head screwdriver, remove the seven screws that secure the end cap to the line array enclosure. Lift the end cap away from the enclosure. Unplug the molex connector from the speaker harness.

Re-assembly note: Make sure that the end cap gasket is properly aligned to achieve an airtight seal.

6. Lower Line Array Top End Cap Removal

6.1 Using a Phillips-head screwdriver, remove the six screws that secure the end cap to the line array enclosure. Lift off the end cap. Unplug the molex connector from the speaker harness.

Re-assembly note: Make sure that the end cap gasket is properly aligned to achieve an airtight seal.

7. Lower Line Array Bottom End Cap Removal

7.1 Using a Phillips-head screwdriver, remove the seven screws that secure the end cap to the line array enclosure. Lift the end cap away from the enclosure. Unplug the molex connector from the speaker harness.

Re-assembly note: Make sure that the end cap gasket is properly aligned to achieve an airtight seal.

Disassembly Procedures

8. Front Cap Removal

8.1 Using a Phillips-head screwdriver, remove the four screws that secure the front cap to the bottom front of the line array enclosure. Lift the end cap away from the enclosure.

Bass Module Procedures

Note: Refer to Figure 8 for the following procedures.

1. Grille Removal

1.1 Using an allen wrench, remove the four screws that secure the grille to the upper and lower speaker end caps.

1.2 Lift off the grille.

2. Nameplate Removal

2.1 Perform procedure 1.

2.2 On the back of the grille, remove the retaining nut and spring from the post of the nameplate. Lift the nameplate off of the grille.

3. Driver Removal

3.1 Perform procedure 1.

3.2 Using a Phillips-head screwdriver, remove the four screws that secure the driver to the bass module enclosure.

3.3 Lift the driver out of the enclosure. Note the wiring configuration and cut the wires as close to the driver terminals as possible.

Re-assembly notes:
- When soldering the speaker harness wires to the new driver, be sure to observe polarity of the driver harness wires.
- Be sure to properly align the gasket behind the new driver to ensure an airtight fit.

4. Input Panel Removal

4.1 Using a Phillips-head screwdriver, remove the four screws that secure the input panel to the bass module enclosure.

4.2 Lift the input panel away from the bass module enclosure.

4.3 Make a note of the wiring configuration and un-solder the speaker harness wires from the input panel.

Figure 10. PS1 Power Stand Block Diagram

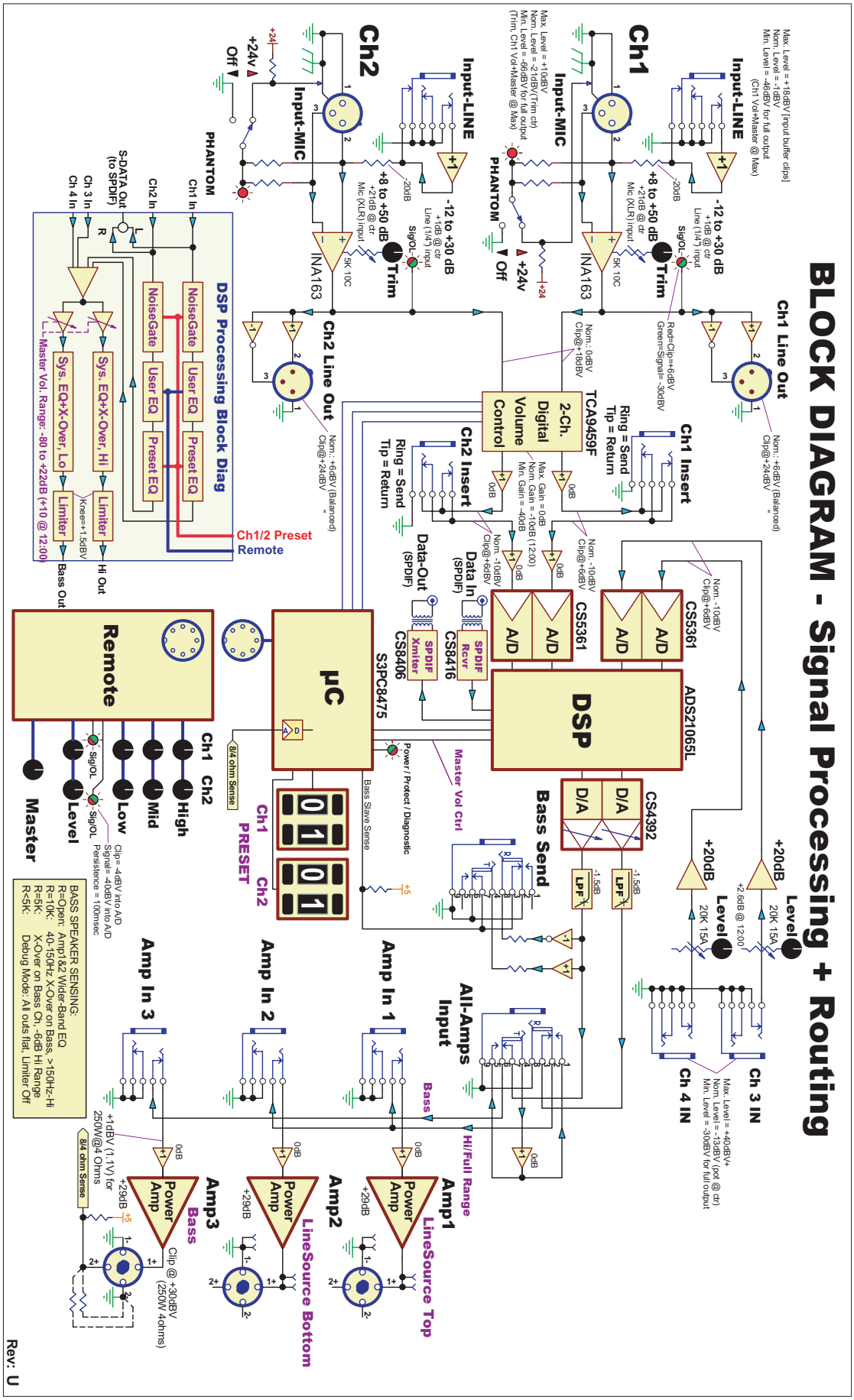

Test Procedures

PS1 Power Stand Tests

Equipment Required

- dB Meter
- Digital Multi-meter
- Audio Signal Generator
- Distortion Meter
- 3 - 4 Ohm, 250 Watt Load Resistors
- Test cables, see Appendix

Overall PS1 System Tests

Notes:
1. Do not connect the R1 remote control for the following tests, unless specified. Powering up the PS1 power stand without the remote has the same effect as setting all of the controls on the remote to the midpoint.
2. On the front panel of the PS1, set the Channel 1 and Channel 2 Preset Select switches to 00. Short out the 2+ and 2- connections on the Amp 3 out connector using the test cable described in section 1 of the appendix of this manual. This will put the PS1 into debug mode for the following tests. In this mode the crossover, the compressor and the EQ are disabled. The DSP will pass a flat response. The level controls and the clip indicators still operate in this mode.
3. Refer to Figure 10, PS1 Block Diagram, for the following procedures.

1. Channel 1 and 2 Mic Input Gain Tests

1.1 Place a 1/4” mono shorting plug into the Amp 2 IN and Amp 3 IN jacks on the right hand side of the input/output panel. This will disable the channel 2 and 3 amplifiers while testing the channel 1 amplifier.

1.2 On the left hand side of the input/output panel, set the channel 1 Mic Trim control to the 6 setting. Ensure that the Phantom Power push button is not pushed in.

1.3 Using a balanced XLR male input cable, apply a 1 kHz, -30dBV signal to the channel 1 input.

1.4 Reference a dB meter to the input level. Measure the gain output at the Amp 1 OUT jack. It should be +48.5 dB + 3 dB.

1.5 Move the shorting plug from the Amp 2 IN jack to the Amp 1 IN jack and repeat steps 1.1 to 1.4 for the channel 2 Mic input.

2. Channel 1 and 2 Mic Input Frequency Reponse and Distortion Tests

2.1 Place a 1/4” mono shorting plug into the Amp 2 IN and Amp 3 IN jacks on the right hand side of the input/output panel. This will disable the channel 2 and 3 amplifiers while testing the channel 1 amplifier.

2.2 On the left hand side of the input/output panel, set the channel 1 Mic Trim control to the 6 setting. Ensure that the Phantom Power push button is not pushed in.

2.3 Using a balanced XLR male input cable, apply a 1 kHz, -30 dBV signal to the channel 1 input.

2.4 Use an 80kHz low-pass filter on your measuring equipment. Reference a dB meter to the input level. Measure the frequency response at the Amp 1 OUT jack. It should be 0 dB + 3 dB from 30 Hz to 15 kHz.

2.5 Measure the Total Harmonic Distortion (THD) level at the Amp 1 OUT jack.
It should be 0.25% max at 1 kHz and 1.5% max at 15 kHz.

2.6 Move the shorting plug from the Amp 2 IN jack to the Amp 1 IN jack and repeat steps 2.1 to 2.5 for the channel 2 Mic input.

Test Procedures

3. Channel 1 and 2 Mic Input Signal to Noise Ratio (Dynamic Range) Tests

3.1 Place a 1/4” mono shorting plug into the Amp 2 IN and Amp 3 IN jacks on the right hand side of the input/output panel. This will disable the channel 2 and 3 amplifiers while testing the channel 1 amplifier.

3.2 On the left hand side of the input/output panel, set the channel 1 Mic Trim control to the 6 setting. Ensure that the Phantom Power push button is not pushed in.

3.3 Using a balanced XLR male input cable, apply a 1 kHz, -30 dBV signal to the channel 1 input.

3.4 Reference a dB meter to the output level at the Amp 1 OUT jack. Remove the input signal and measure the A-Weighted output level. It should be -80 dB minimum.

3.5 Move the shorting plug from the Amp 2 IN jack to the Amp 1 IN jack and repeat steps 3.1 to 3.4 for the channel 2 Mic input.

4. Channel 1 and 2 Mic Input Phantom Power Test

4.1 Plug an XLR connector into the channel 1 Mic input. Do not connect any cables to the channel 1 or channel 2 Mic inputs. Power on the unit.

4.2 Press the channel 1 phantom power switch. Verify that the LED lights. Using a DMM, measure the DC voltage level across pins 1 and 2 of the XLR connector. Verify that the DC level is +24Vdc + 1Vdc relative to pin 1.

4.3 Measure the DC voltage level across pins 1 and 3 of the XLR connector. Verify that the DC level is +24Vdc + 1Vdc relative to pin 1.

4.4 Repeat steps 4.1 to 4.3 for channel 2.

5. Channel 1 and 2 Line Input Gain Tests

5.1 Place a 1/4” mono shorting plug into the Amp 2 IN and Amp 3 IN jacks on the right hand side of the input/output panel. This will disable the channel 2 and 3 amplifiers while testing the channel 1 amplifier.

5.2 On the left hand side of the input/output panel, set the channel 1 Mic Trim control to the 6 setting. Ensure that the Phantom Power push button is not pushed in.

5.3 Using an unbalanced 1/4” phono jack input cable, apply a 1 kHz, -10 dBV signal to the channel 1 input.

5.4 Reference a dB meter to the input level. Measure the gain output at the Amp 1 OUT jack. It should be +28.5 dB + 4 dB.

5.5 On the signal generator, turn the input level all the way down. Verify that the channel 1 Signal/OL LED is off. Increase the signal generator level. Verify that the LED lights green. Increase the signal level again and verify that the LED lights red.
Note: You may have to increase the Mic Trim level on the PS1 channel 1 input as well to get the LED to light red.

5.5 Move the shorting plug from the Amp 2 IN jack to the Amp 1 IN jack and repeat steps 5.1 to 5.5 for the channel 2 Line input.

6. Channel 1 and 2 Line Input Frequency Reponse and Distortion Tests

6.1 Place a 1/4” mono shorting plug into the Amp 2 IN and Amp 3 IN jacks on the right hand side of the input/output panel. This will disable the channel 2 and 3 amplifiers while testing the channel 1 amplifier.

6.2 On the left hand side of the input/output panel, set the channel 1 Mic Trim control to the 6 setting. Ensure that the Phantom Power push button is not pushed in.

Test Procedures

6.3 Using an unbalanced 1/4” phono jack input cable, apply a 1 kHz, -10 dBV signal to the channel 1 input.

6.4 Use an 80 kHz low-pass filter on your measuring equipment. Reference a dB meter to the input level. Measure the frequency response at the Amp 1 OUT jack. It should be 0 dB + 3 dB from 30 Hz to 15 kHz.

6.5 Measure the Total Harmonic Distortion (THD) level at the Amp 1 OUT jack. It should be 0.25% max at 1 kHz and 1.5% max at 15 kHz.

6.6 Move the shorting plug from the Amp 2 IN jack to the Amp 1 IN jack and repeat steps 6.1 to 6.5 for the channel 2 Line input.

7. Channel 1 and 2 Line Input Signal to Noise Ratio (Dynamic Range) Tests

7.1 Place a 1/4” mono shorting plug into the Amp 2 IN and Amp 3 IN jacks on the right hand side of the input/output panel. This will disable the channel 2 and 3 amplifiers while testing the channel 1 amplifier.

7.2 On the left hand side of the input/output panel, set the channel 1 Mic Trim control to the 6 setting. Ensure that the Phantom Power push button is not pushed in.

7.3 Using an unbalanced 1/4” phono jack input cable, apply a 1 kHz, -10 dBV signal to the channel 1 input.

7.4 Reference a dB meter to the output level at the Amp 1 OUT jack. Remove the input signal and measure the A-Weighted output level. It should be -80 dB minimum.

7.5 Move the shorting plug from the Amp 2 IN jack to the Amp 1 IN jack and repeat steps 7.1 to 7.4 for the channel 2 Line input.

8. Channel 3 and 4 Line Input Gain Tests

8.1 Place a 1/4” mono shorting plug into the Amp 1 IN and Amp 2 IN jacks on the right hand side of the input/output panel. This will disable the channel 1 and 2 amplifiers while testing the channel 3 amplifier.

8.2 On the left hand side of the input/output panel, set the channel 3 Level control to the 6 setting.

8.3 Using an unbalanced 1/4” phono jack input cable, apply a 1 kHz, -20 dBV signal to the channel 1 input.

8.4 Reference a dB meter to the input level. Measure the gain output at the Bass/Amp 3 OUT jack. It should be +40.1 dB + 3 dB.

8.5 Repeat steps 8.1 to 8.4 for the channel 4 Line input.

9. Channel 3 and 4 Line Input Frequency Reponse and Distortion Tests

9.1 Place a 1/4” mono shorting plug into the Amp 1 IN and Amp 2 IN jacks on the right hand side of the input/output panel. This will disable the channel 1 and 2 amplifiers while testing the channel 3 amplifier.

9.2 On the left hand side of the input/output panel, set the channel 4 Mic Trim control to the 6 setting.

9.3 Using an unbalanced 1/4” phono jack input cable, apply a 1 kHz, -20 dBV signal to the channel 1 input.

9.4 Use an 80 kHz low-pass filter on your measuring equipment. Reference a dB meter to the input level. Measure the frequency response at the Amp 1 OUT jack. It should be 0 dB + 3 dB from 30 Hz to 15 kHz.

9.5 Measure the Total Harmonic Distortion (THD) level at the Amp 1 OUT jack. It should be 0.25% max at 1 kHz and 1.5% max at 15 kHz.

9.6 Repeat steps 9.1 to 9.5 for the channel 4 Line input.

10. Channel 3 and 4 Line Input Signal to Noise Ratio (Dynamic Range) Tests

10.1 Place a 1/4” mono shorting plug into the Amp 1 IN and Amp 2 IN jacks on the right hand side of the input/output panel. This will disable the channel 1 and 2 amplifiers while testing the channel 3 amplifier.

10.2 On the left hand side of the input/output panel, set the channel 3 Level control to the 6 setting.

10.3 Using an unbalanced 1/4” phono jack input cable, apply a 1 kHz, -10 dBV signal to the channel 1 input.

10.4 Reference a dB meter to the output level at the Bass/Amp 3 OUT jack. Remove the input signal and measure the A-Weighted output level. It should be -80 dB minimum.

10.5 Repeat steps 10.1 to 10.4 for the channel 4 Line input.

11. Channel 1 and 2 Remote Control, Preset Switch and Insert Function Tests

11.1 Connect the PS1 power stand to a known good L1 line array. Set the channel 1 preset switch to 00. Connect the remote control to the unit using the remote control MIDI cable supplied with the PS1.

11.2 Connect an analog audio source to the Channel 1 line input 1/4 inch jack. This source can be a CD player with a music disc.

11.3 Adjust the trim level so that the LED is lit mostly green. The audio should sound normal.

11.4 With the audio playing, change the channel 1 preset to 97 and back to 00. The channel should mute gracefully when the preset switch is operated. The audio should fade back in again about a second after the switch has stopped operating.
Note: Preset 97 is a 1 kHz band pass (telephone-type sound). Preset 00 should sound normal.

11.5 Operate all channel 1 controls on the remote (high, mid, low, volume and master volume). All tone controls should have a clearly audible effect and operate smoothly. Channel volume may display a little “zipper” noise, which is normal.

Note: Channel volume all the way down does not mute the channel, but the output level should be very low. There is a small, but noticeable time delay between operating the control and the audible effect. This is normal. The master volume control should operate smoothly without any artifacts.

11.6 Insert a 1/4 inch phono jack all the way into the channel 1 Insert jack. The audio should sound normal.

11.7 Insert a 1/4 inch phono jack into the channel 3 Line IN jack and operate the volume control on the power stand. The audio should sound normal.

11.8 Repeat steps 11.1 to 11.7 for the channel 2 input.

12. Channel 1 Send, Line Output and Digital Output Tests

Note: For these tests you will need an external device that can accept both 1/4 inch and XLR inputs. A small mixer, such as a Mackie or Behringer with headphones connected works well for this. The master volume control on the PS1’s remote control should be set all the way down to mute all sound coming from the unit under test.

Test Procedures

12.1 Connect the PS1 power stand to a known good L1 line array. Set the channel 1 preset switch to 00. Connect the remote control to the unit using the remote control MIDI cable supplied with the PS1.

12.2 Connect an analog audio source to the Channel 1 Line IN 1/4 inch jack. This source can be a CD player with a music disc.

12.3 Adjust the trim level so that the LED is lit mostly green. The audio should sound normal.

12.4 Insert a 1/4 inch plug halfway into the channel 1 Insert jack. The audio should sound normal.

12.5 Connect the PS1 channel 1 XLR Line OUT jack to the XLR input of the mixer. The audio should sound normal.

Note: The PS1 puts out a “professional” +4dBu level. You may have to turn the the input trim control on the mixer all the way down to prevent overloading the signal and distorting it.

12.6 Connect the Data Out jack of the PS1 to a device that accepts a 48 kHz S/PDIF data stream. The audio should sound normal.

13. Power Amplifier Tests

13.1 Connect the PS1 power stand to a known good L1 line array. Set the channel 1 preset switch to 00. Connect the remote control to the unit using the remote control MIDI cable supplied with the PS1.

13.2 Connect an analog audio source to the Amp 1 IN 1/4 inch phono jack. This source can be a CD player with a music disc.

13.3 Verify that the audio comes from the upper section of the L1 line array. The audio should sound clean and undistorted.

13.4 Connect the audio source to the Amp 2 IN 1/4 inch phono jack. Verify that the audio comes from the lower section of the L1 line array. The audio should sound clean and undistorted.

13.5 Connect a B1 bass module to the PS1 power stand at the Bass/Amp 3 OUT jack. Connect the audio source to the Amp 3 IN 1/4 inch phono jack. Sound should come from the bass module only and be clean and undistorted.

13.6 Connect the audio source to the All Amps IN 1/4 inch phono jack. Sound should come from both of the L1 line array sections and the bass module simultaneously. The audio should be clear and undistorted.

14. High SPL System Sweep Test

CAUTION: This test will be extremely loud. Hearing protection is advised.

14.1 Connect a R1 remote control to the PS1 power stand under test. Set the channel 1 controls to mid-level. Set the master volume control on the remote to the 1 o’clock position. Set the channel 1 Mic Trim control on the PS1 to 6. Connect a L1 line array to the PS1. Connect a B1 bass module to the PS1.

14.2 Connect a signal generator to the channel 1 input on the PS1. Adjust the signal generator and/or trim control so that the Signal/OL LED is just below red.

14.3 Sweep the input frequency from 40 Hz to 14 kHz. Listen for any unusual noises and excessive distortion or drop-outs.

15. Bass Module Auto-EQ Test

15.1 Connect a L1 line array to the PS1 power stand. Connect an R1 remote control to the power stand. Connect a B1 bass module to the Bass/Amp 3 OUT jack on the power stand. Connect an audio source to the channel 1 and 2 inputs of the power stand.

Test Procedures

15.2 Set the channel 1 and 2 level controls to identical settings so that both LEDs are mainly green.

15.3 While the audio is playing, disconnect the B1 bass module from the power stand. The system should mute and un-mute and audio should resume. The audio should sound normal, but not punchy (no deep bass).

15.4 Plug a dummy 1/4 inch phono jack into the Bass Line Out jack. The system should mute and un-mute again, but the audio should sound thinner than before.

15.5 Remove the dummy plug. The system should mute and un-mute and the audio should sound normal again.

15.6 Re-connect the B1 bass module to the power stand. The audio should mute and un-mute again and sound normal.

15.7 Connect a second B1 bass module to the first one. The audio should mute and un-mute. The audio will sound very similar to having only one bass module attached. Disconnect the second bass module. The system should mute and un-mute and the audio should sound normal again.

L1 Line Array Tests

Set up the unit under test as shown below.

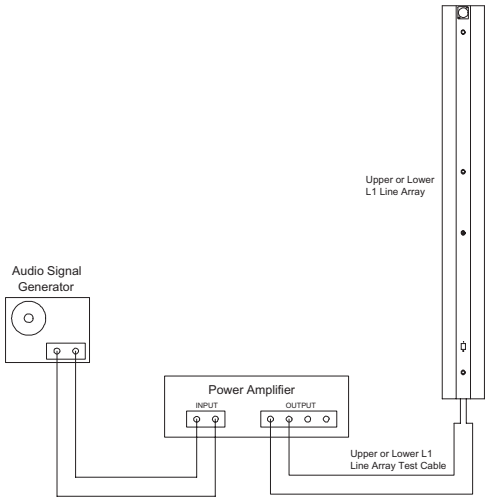

1. Air Leak Test

1.1 Apply a 100 Hz, 10 Vrms sine wave to the unit under test.

1.2 Listen carefully for air leaks from around the end cap, the transducers and the grille. Air leaks will be heard as a hissing or sputtering sound. All repairs must be hidden. Test duration should be 5 seconds minimum.

2. Transducer Rub and Tick Test

2.1 Remove the transducer you wish to test using the disassembly procedures in this manual. Do not unplug the wires at the transducer assembly terminals.

2.2 Connect a signal generator directly to the terminals of the transducer assembly under test.

2.3 Apply a 20 Hz, 5 Vrms signal to the transducer assembly.

2.4 Listen carefully for any extraneous noises such as rubbing, scraping or ticking.

Note: To distinguish between normal suspension noise and rubs or ticks, displace the cone slightly with your fingers. If the noise stays the same, it is normal suspension noise and the driver is good. Suspension noise will not be heard with program material.

3. Transducer Phase Test

3.1 Apply a DC voltage of 10V, positive applied to the positive tab of the dual banana jack on the line array test cable and negative applied to negative (gnd) tab.

3.2 All of the driver cones should move outward when the DC voltage is applied.

3.3 Rewire any incorrectly connected transducers.

Test Procedures

4. L1 Line Array Sweep Test

4.1 Set up the upper or lower line array section as shown in the figure on the previous page.

4.2 Apply a 100 Hz, 10 Vrms sine wave to the input.

4.3 While listening to the output of the system, sweep the input frequency slowly from 100 Hz to 15 kHz.

4.4 Listen carefully for any extraneous noises such as buzzing and ticking.

B1 Bass Module Tests

Set up the unit under test as shown below.

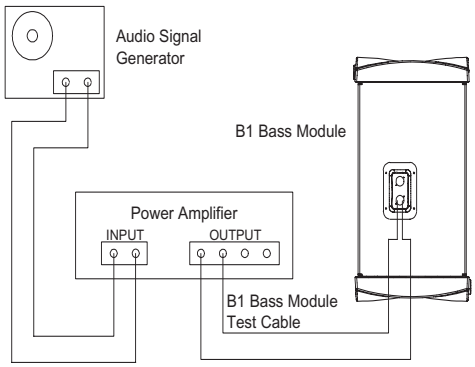

1. Air Leak Test

1.1 Apply a 100 Hz, 20 Vrms sine wave to the unit under test.

1.2 Listen carefully for air leaks from around the end cap, the transducers and the grille. Air leaks will be heard as a hissing or sputtering sound. All repairs must be hidden. Test duration should be 5 seconds minimum.

2. Transducer Rub and Tick Test

2.1 Remove the transducer you wish to test using the disassembly procedures in this manual. Do not unplug the wires at the transducer assembly terminals.

2.2 Connect a signal generator directly to the terminals of the transducer assembly under test.

2.3 Apply a 10 Hz, 10 Vrms signal to the transducer assembly.

2.4 Listen carefully for any extraneous noises such as rubbing, scraping or ticking.

Note: To distinguish between normal suspension noise and rubs or ticks, displace the cone slightly with your fingers. If the noise stays the same, it is normal suspension noise and the driver is good. Suspension noise will not be heard with program material.

3. Transducer Phase Test

3.1 Apply a DC voltage of 20V, positive applied to the positive tab of the dual banana jack on the bass module test cable and negative applied to negative (gnd) tab.

3.2 Notice carefully that all driver cones should move outward when the DC voltage is applied.

3.3 Rewire any incorrectly connected transducers.

4. System Sweep Test

4.1 Set up the system as shown in the figure at left.

4.2 Apply a 10 Hz, 20 Vrms sine wave to the input.

4.3 While listening to the output of the system, sweep the input frequency slowly from 10 Hz to 400 Hz.

4.4 Listen carefully for any extraneous noises such as buzzing and ticking.

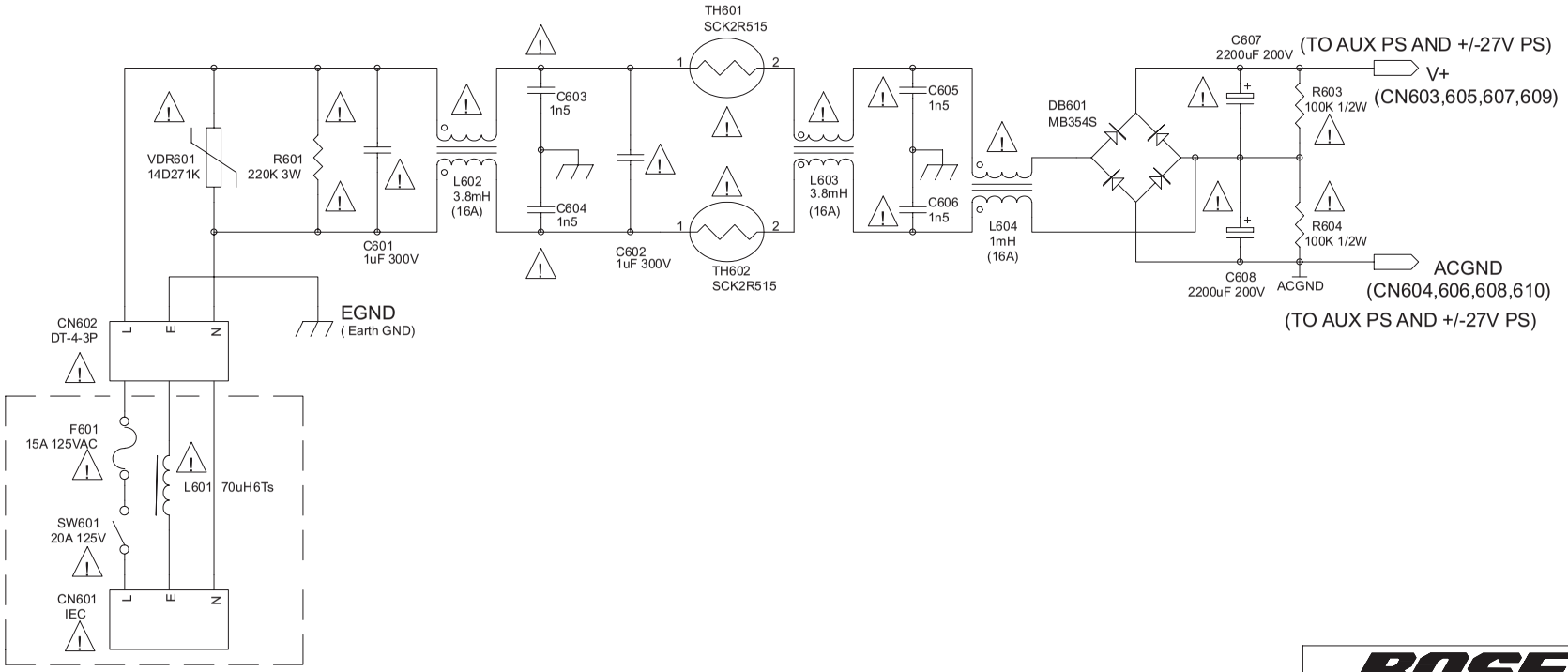

BOSE
FRAMINGHAM, MA 01701-9168

PS1 Power Stand
FCC Filter PCB, Rev. F
120V Version 1.0 Systems
P/N: 275436
Sheet 1 of 1

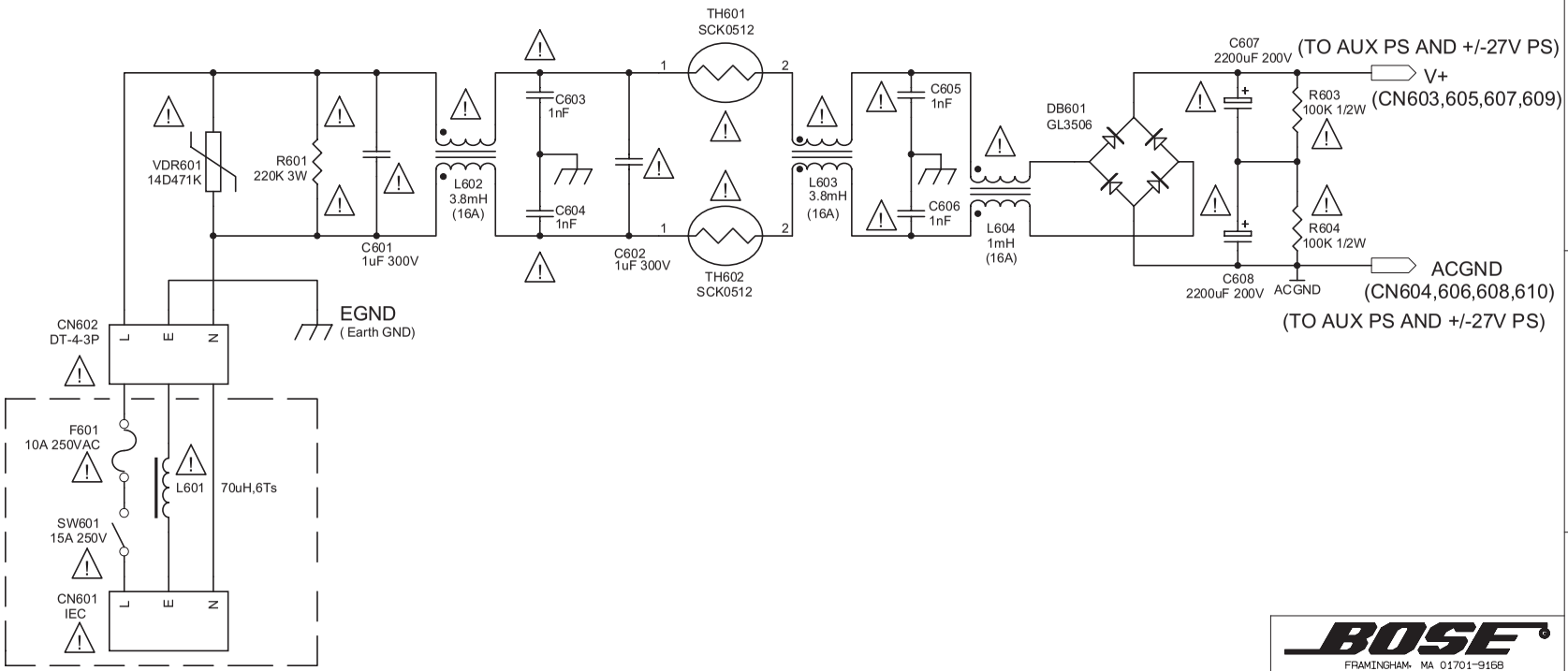

BOSE
FRAMINGHAM, MA 01701-9168

PS1 Power Stand
FCC Filter PCB, Rev. F
120V Version 1.1 Systems
P/N: 283370
Sheet 1 of 1

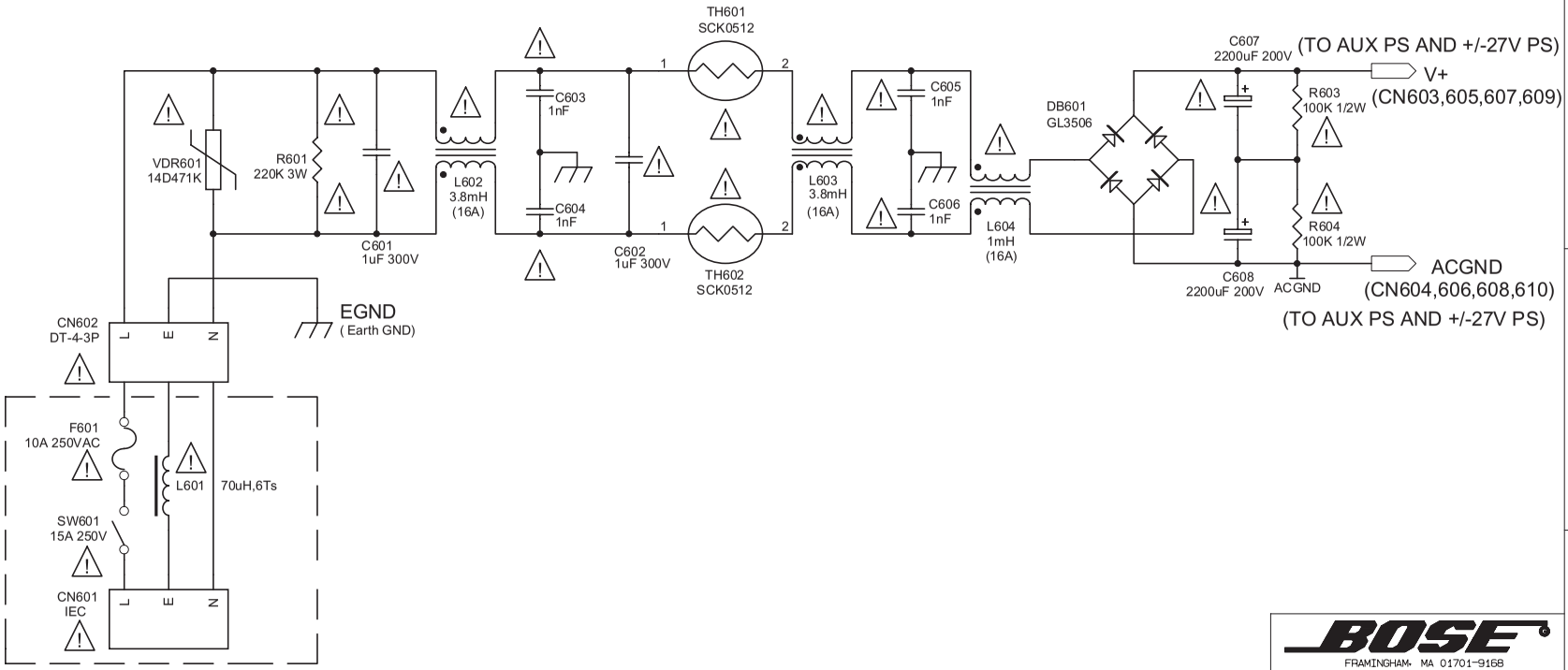

BOSE
FRAMINGHAM, MA 01701-9168

PS1 Power Stand
FCC Filter PCB, Rev. F
230V Version 1.0 and 1.1 Systems
P/N: 283369
Sheet 1 of 1

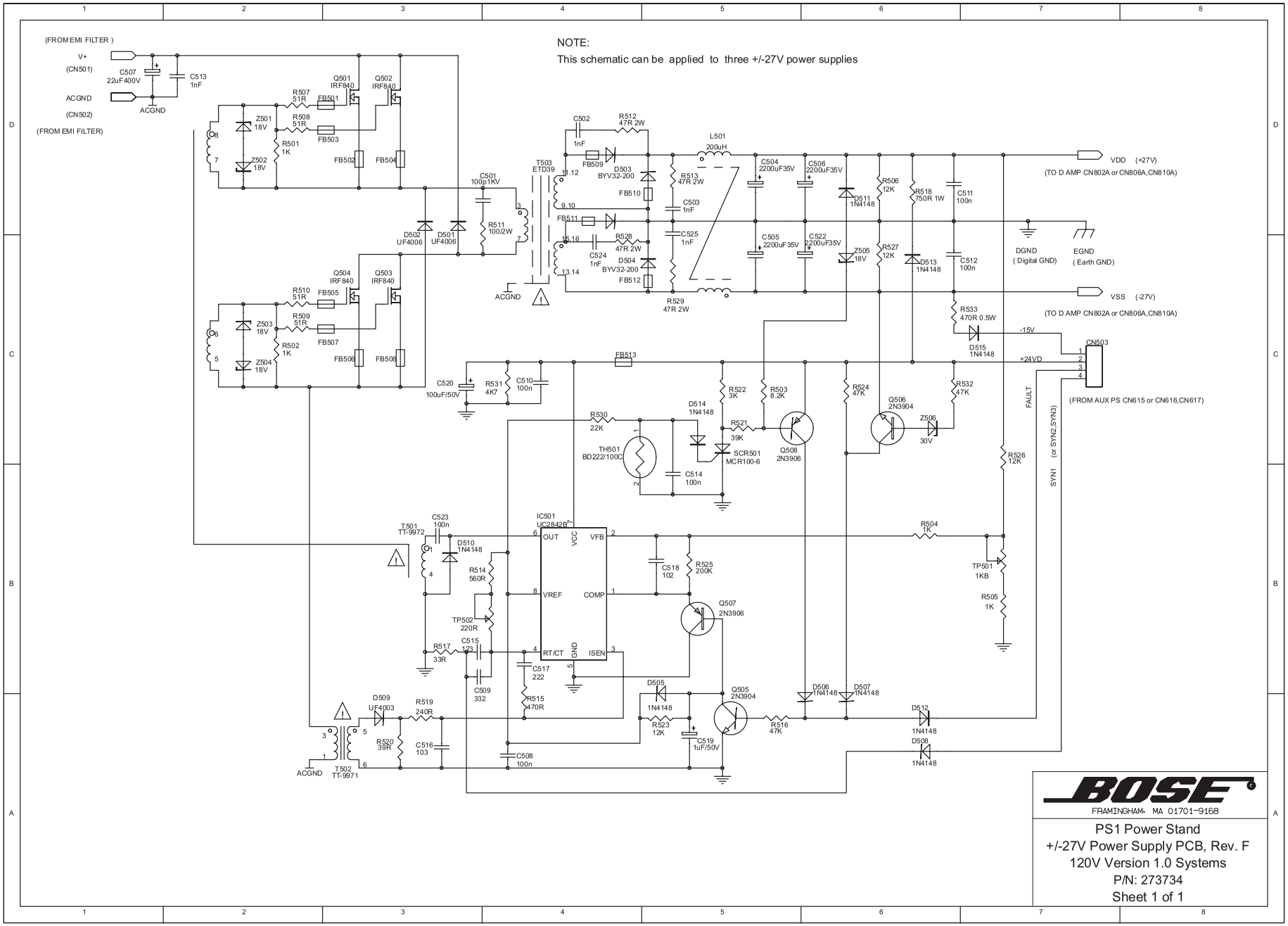
NOTE:
This schematic can be applied to three +/-27V power supplies
(FROM EMI FILTER)
V+
(CN501)
ACGND
(CN502)
(FROM EMI FILTER)
C507 22uF400V
C513 1nF
ACGND
Q501 IRF840
Q502 IRF840
Q503 IRF840
Q504 IRF840
R507 51R
R508 51R
R509 51R
R510 51R
R501 1K
R502 1K
Z501 18V
Z502 18V
Z503 18V
Z504 18V
FB501
FB502
FB503
FB504
FB505
FB506
FB507
FB508
D501 UF4006
D502 UF4006
C501 100p1KV
R511 100/2W
T503 ETD39
C502 1nF
R512 47R 2W
FB509
D503 BYV32-200
FB510
FB511
R528 47R 2W
C524 1nF
D504 BYV32-200
FB512
R529 47R 2W
R513 47R 2W
C503 1nF
C525 1nF
L501 200uH
C504 2200uF35V
C506 2200uF35V
C505 2200uF35V
C522 2200uF35V
D511 1N4148
Z505 18V
R506 12K
R527 12K
R518 750R 1W
D513 1N4148
C511 100n
C512 100n
VDD (+27V)
(TO D AMP CN802A or CN806A,CN810A)
DGND
(Digital GND)
EGND
(Earth GND)
VSS (-27V)
(TO D AMP CN802A or CN806A,CN810A)
R533 470R 0.5W
D515 1N4148
-15V
+24VD
CN503
(FROM AUX PS CN615 or CN616,CN617)
FAULT
SYN1 (or SYN2,SYN3)
FB513
C520 100uF/50V
R531 4K7
C510 100n
R530 22K
TH501 BD222/100C
D514 1N4148
R521 39K
SCR501 MCR100-6
C514 100n
R522 3K
R503 8.2K
Q508 2N3906
R524 47K
Q506 2N3904
Z506 30V
R532 47K
R526 12K
R504 1K
TP501 1KB
R505 1K
IC501 UC2842B
OUT
VCC
VFB
VREF
COMP
RT/CT
GND
ISEN
C518 102
R525 200K
Q507 2N3906
T501 TT-9972
C523 100n
D510 1N4148
R514 560R
TP502 220R
R517 33R
C515 123
C509 332
C517 222
R515 470R
D509 UF4003
R519 240R
R520 39R
C516 103
T502 TT-9971
ACGND
C508 100n
D505 1N4148
R523 12K
C519 1uF/50V
Q505 2N3904
R516 47K
D506 1N4148
D507 1N4148
D512 1N4148
D508 1N4148
BOSE
FRAMINGHAM, MA 01701-9168
PS1 Power Stand
+/-27V Power Supply PCB, Rev. F
120V Version 1.0 Systems
P/N: 273734
Sheet 1 of 1

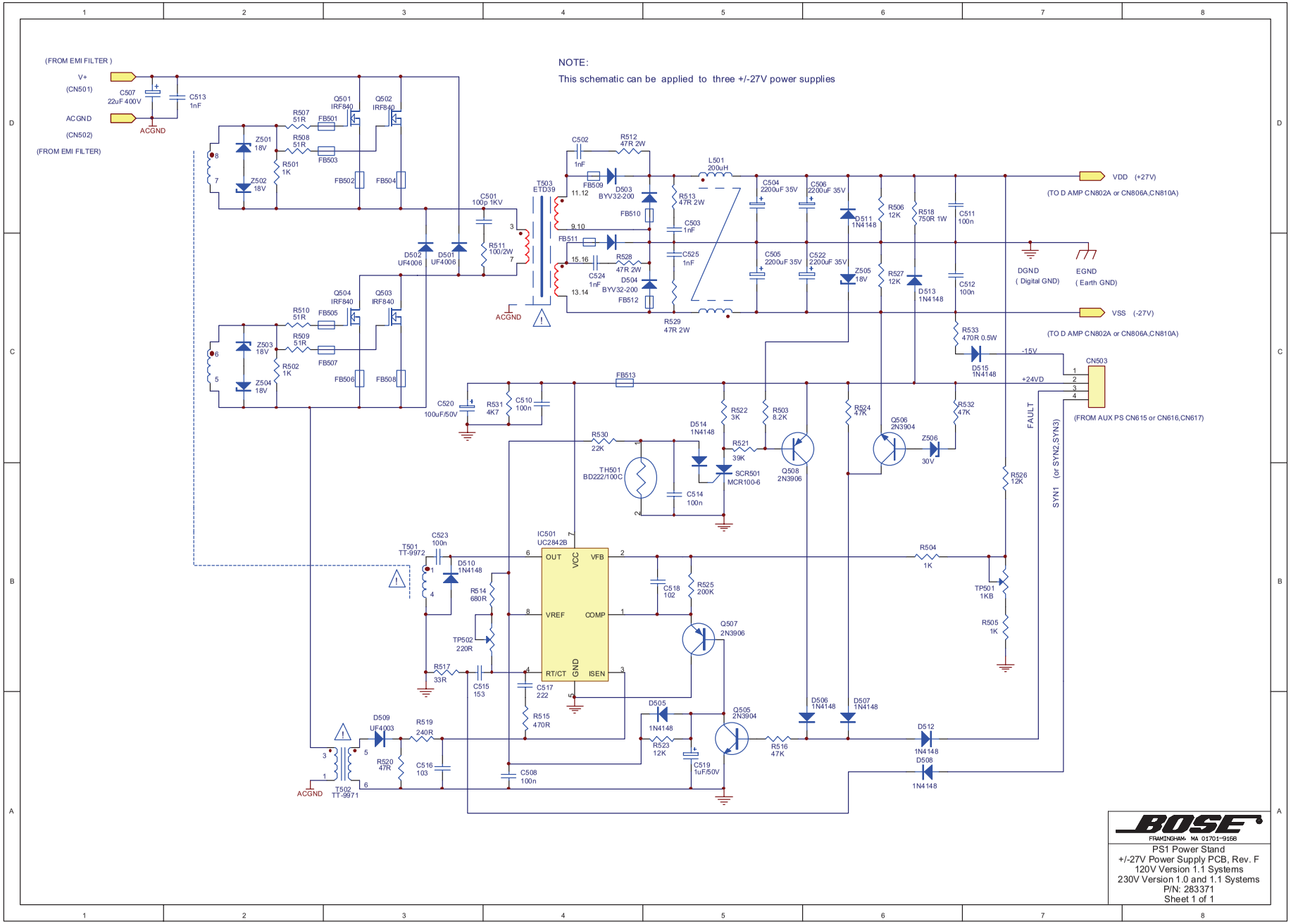

BOSE
FRAMINGHAM, MA 01701-9168

PS1 Power Stand
+/-27V Power Supply PCB, Rev. F
120V Version 1.1 Systems
230V Version 1.0 and 1.1 Systems
P/N: 283371
Sheet 1 of 1

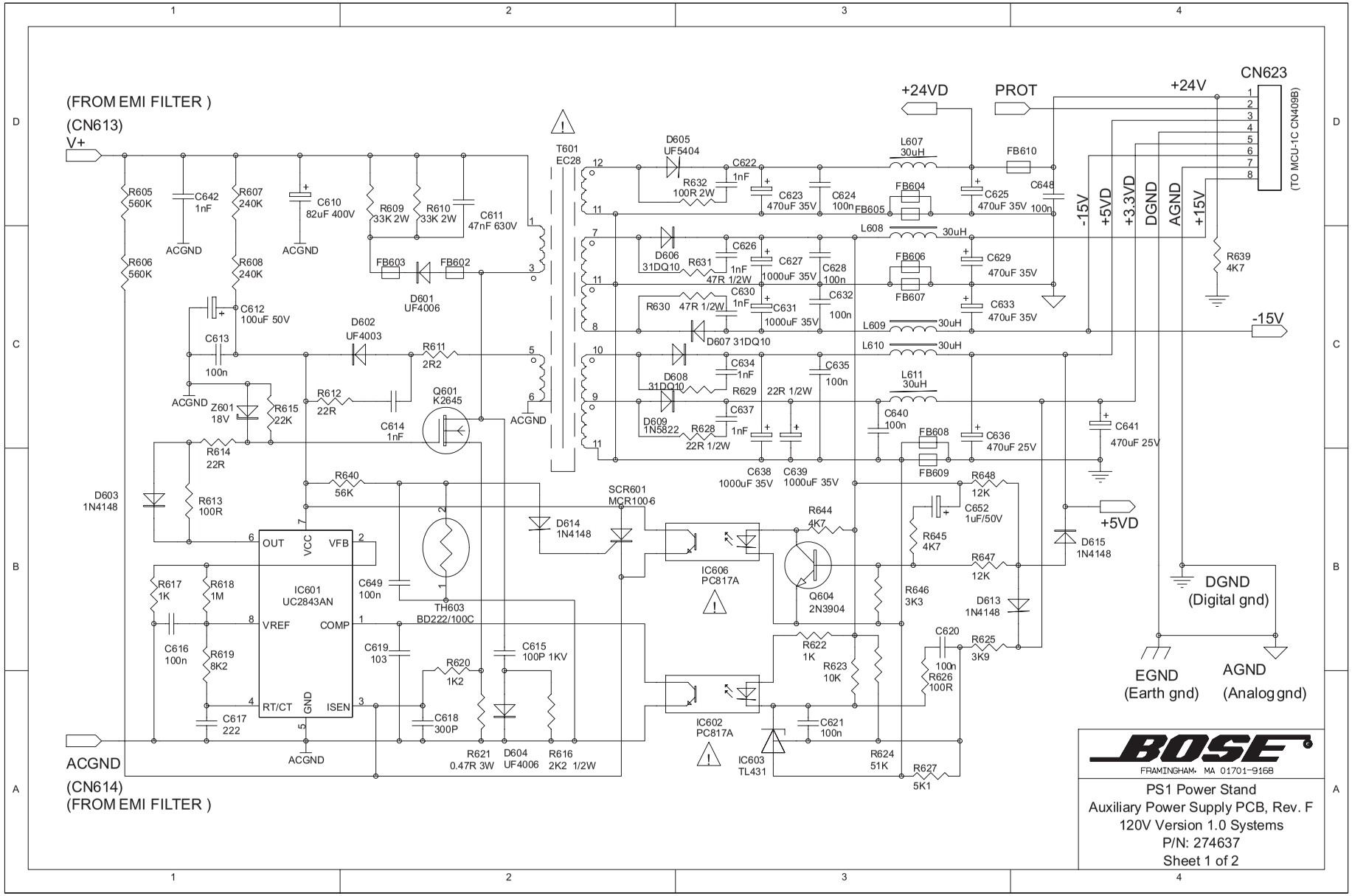
(FROM EMI FILTER)
(CN613)
V+
ACGND
(CN614)
(FROM EMI FILTER)
R605 560K
R606 560K
C642 1nF
R607 240K
R608 240K
C610 82uF 400V
R609 33K 2W
R610 33K 2W
C611 47nF 630V
FB603
FB602
D601 UF4006
C612 100uF 50V
C613 100n
D602 UF4003
R611 2R2
Z601 18V
R615 22K
R612 22R
C614 1nF
Q601 K2645
R614 22R
D603 1N4148
R613 100R
R640 56K
IC601 UC2843AN
OUT
VCC
VFB
VREF
COMP
RT/CT
GND
ISEN
R617 1K
R618 1M
C616 100n
R619 8K2
C617 222
C649 100n
TH603 BD222/100C
C619 103
R620 1K2
C618 300P
C615 100P 1KV
R621 0.47R 3W
D604 UF4006
R616 2K2 1/2W
T601 EC28
D605 UF5404
R632 100R 2W
C622 1nF
C623 470uF 35V
C624 100n
D606 31DQ10
R631 47R 1/2W
C626 1nF
C627 1000uF 35V
C628 100n
R630 47R 1/2W
C630 1nF
C631 1000uF 35V
C632 100n
D607 31DQ10
D608 31DQ10
R629 22R 1/2W
C634 1nF
C635 100n
D609 1N5822
R628 22R 1/2W
C637 1nF
C638 1000uF 35V
C639 1000uF 35V
L607 30uH
FB604
FB605
L608 30uH
FB606
FB607
L609 30uH
L610 30uH
L611 30uH
C640 100n
FB608
FB609
+24VD
PROT
FB610
C625 470uF 35V
C648 100n
C629 470uF 35V
C633 470uF 35V
C636 470uF 25V
C641 470uF 25V
+24V
CN623
(TO MCU-1C CN409B)
-15V
+5VD
+3.3VD
DGND
AGND
+15V
R639 4K7
SCR601 MCR100-6
D614 1N4148
IC606 PC817A
IC602 PC817A
IC603 TL431
R644 4K7
Q604 2N3904
R646 3K3
R622 1K
R623 10K
C621 100n
R624 51K
R627 5K1
R648 12K
C652 1uF/50V
R645 4K7
R647 12K
D613 1N4148
D615 1N4148
C620 100n
R625 3K9
R626 100R
DGND (Digital gnd)
EGND (Earth gnd)
AGND (Analog gnd)
BOSE
FRAMINGHAM, MA 01701-9168
PS1 Power Stand
Auxiliary Power Supply PCB, Rev. F
120V Version 1.0 Systems
P/N: 274637
Sheet 1 of 2

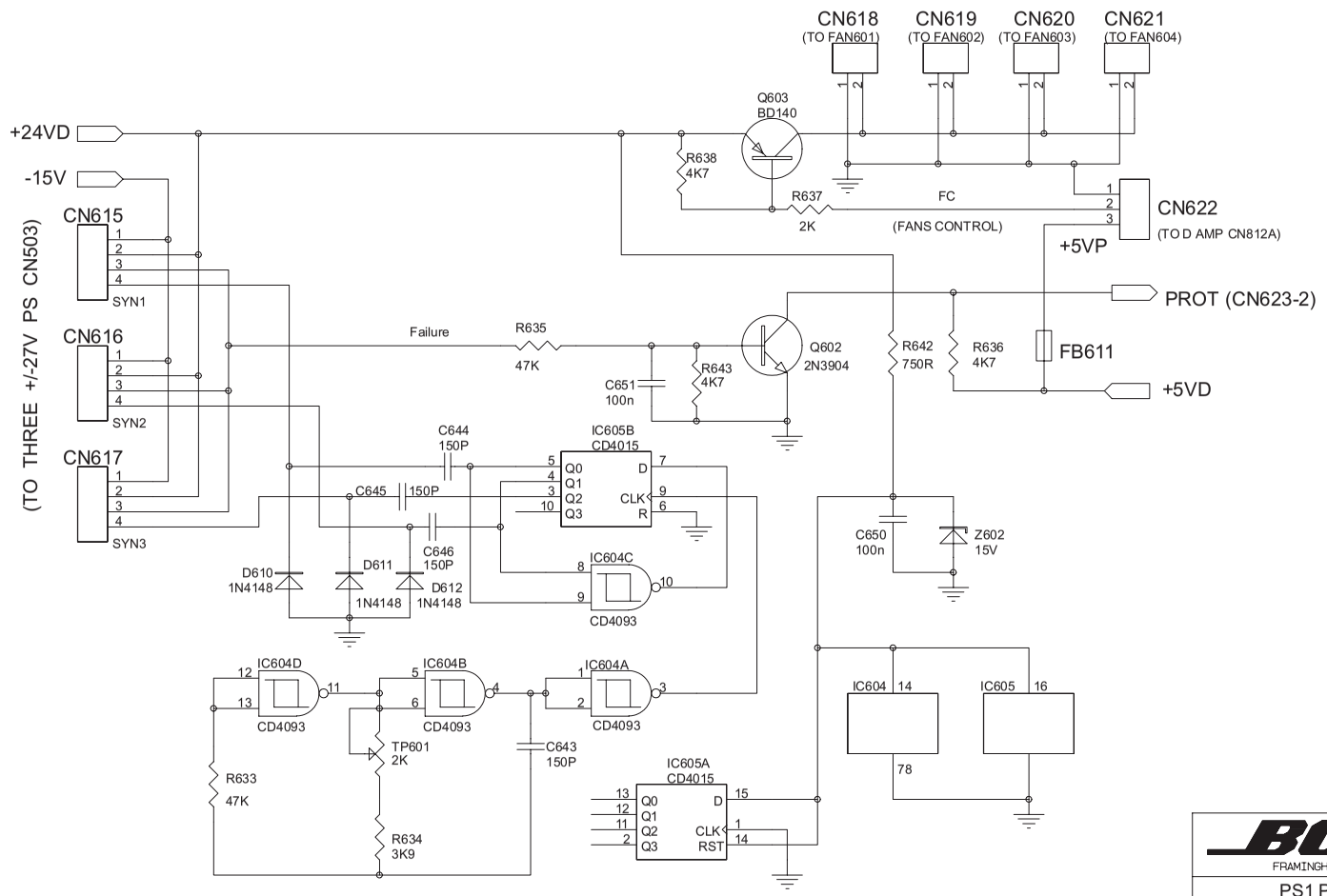

BOSE
FRAMINGHAM, MA 01701-9168

PS1 Power Stand
Auxiliary Power Supply PCB, Rev. F
120V Version 1.0 Systems
P/N: 274637
Sheet 2 of 2

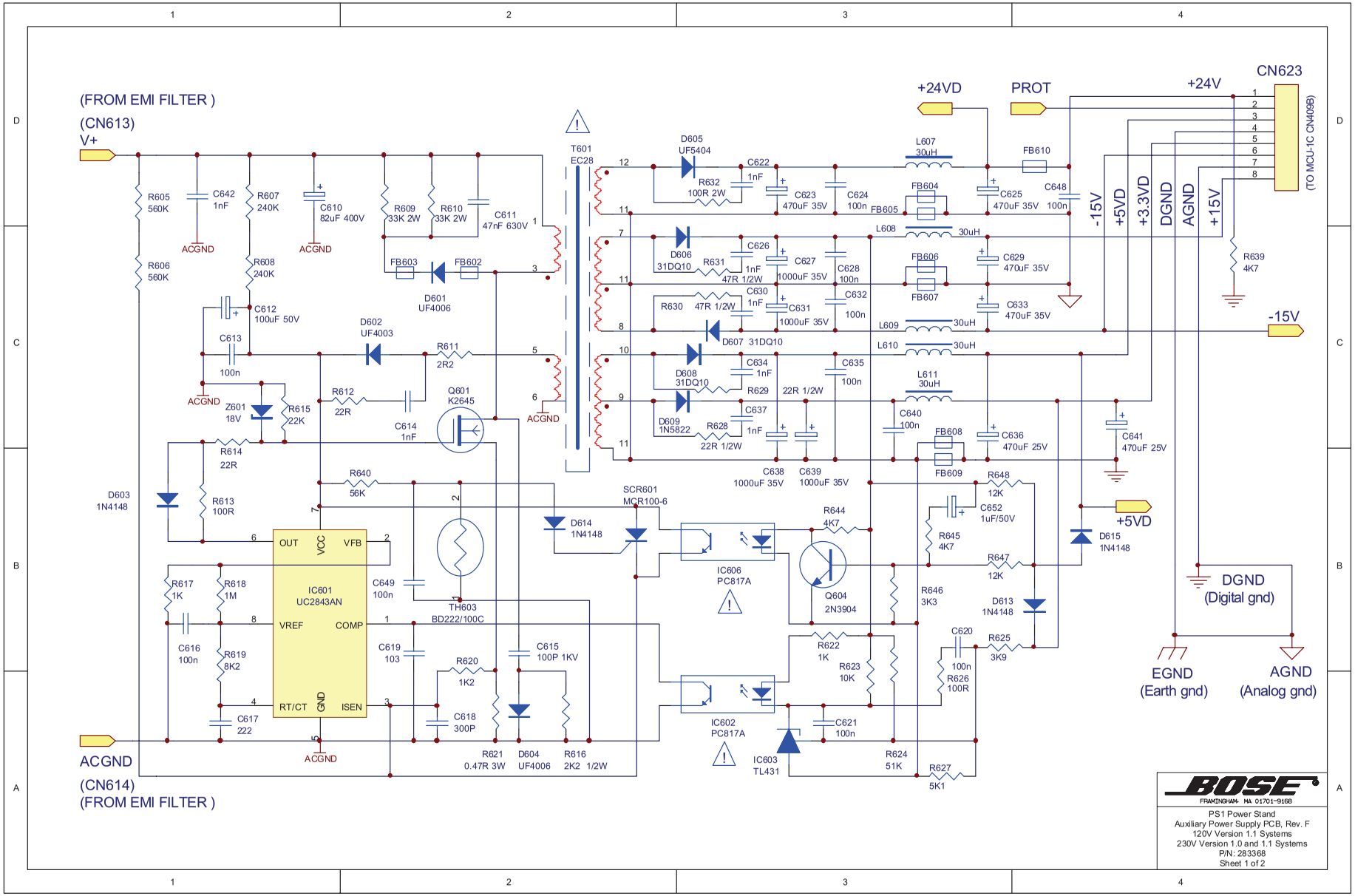
(FROM EMI FILTER)
(CN613)
V+
ACGND
(CN614)
(FROM EMI FILTER)
R605 560K
R606 560K
C642 1nF
R607 240K
R608 240K
C610 82uF 400V
R609 33K 2W
R610 33K 2W
C611 47nF 630V
FB603
FB602
D601 UF4006
C612 100uF 50V
C613 100n
D602 UF4003
R611 2R2
Z601 18V
R615 22K
R612 22R
C614 1nF
Q601 K2645
R614 22R
D603 1N4148
R613 100R
R640 56K
IC601 UC2843AN
OUT
VCC
VFB
VREF
COMP
RT/CT
GND
ISEN
R617 1K
R618 1M
C616 100n
R619 8K2
C617 222
C649 100n
C619 103
TH603 BD222/100C
R620 1K2
C618 300P
C615 100P 1KV
R621 0.47R 3W
D604 UF4006
R616 2K2 1/2W
T601 EC28
D605 UF5404
R632 100R 2W
C622 1nF
C623 470uF 35V
C624 100n
D606 31DQ10
R631 47R 1/2W
C626 1nF
C627 1000uF 35V
C628 100n
R630 47R 1/2W
C630 1nF
C631 1000uF 35V
C632 100n
D607 31DQ10
D608 31DQ10
C634 1nF
C635 100n
R629 22R 1/2W
D609 1N5822
R628 22R 1/2W
C637 1nF
C638 1000uF 35V
C639 1000uF 35V
C640 100n
L607 30uH
FB604
FB605
L608 30uH
FB606
FB607
L609 30uH
L610 30uH
L611 30uH
FB608
FB609
C625 470uF 35V
C629 470uF 35V
C633 470uF 35V
C636 470uF 25V
C648 100n
FB610
+24VD
PROT
+24V
CN623
(TO MCU-1C CN409B)
-15V
+5VD
+3.3VD
DGND
AGND
+15V
R639 4K7
C641 470uF 25V
SCR601 MCR100-6
D614 1N4148
IC606 PC817A
IC602 PC817A
R644 4K7
Q604 2N3904
R645 4K7
R646 3K3
R622 1K
R623 10K
IC603 TL431
C621 100n
R624 51K
R627 5K1
R648 12K
C652 1uF/50V
R647 12K
D613 1N4148
D615 1N4148
C620 100n
R626 100R
R625 3K9
DGND (Digital gnd)
EGND (Earth gnd)
AGND (Analog gnd)
BOSE
FRAMINGHAM, MA 01701-9168
PS1 Power Stand
Auxiliary Power Supply PCB, Rev. F
120V Version 1.1 Systems
230V Version 1.0 and 1.1 Systems
P/N: 283368
Sheet 1 of 2

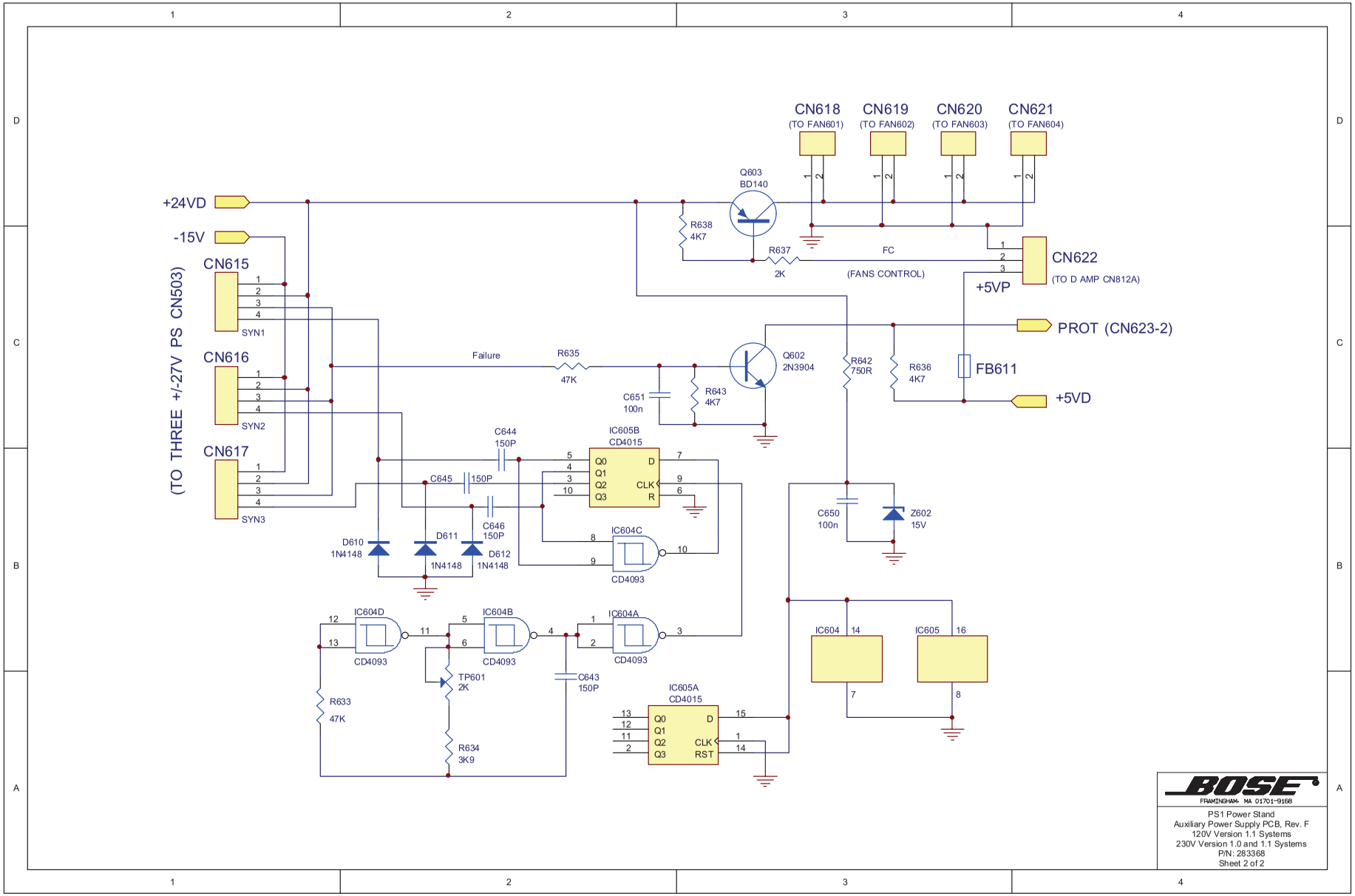
CN618
(TO FAN601)
CN619
(TO FAN602)
CN620
(TO FAN603)
CN621
(TO FAN604)
Q603
BD140
+24VD
-15V
R638
4K7
R637
2K
FC
(FANS CONTROL)
CN622
(TO D AMP CN812A)
+5VP
PROT (CN623-2)
CN615
CN616
CN617
(TO THREE +/-27V PS CN503)
SYN1
SYN2
SYN3
Failure
R635
47K
Q602
2N3904
R642
750R
R636
4K7
FB611
+5VD
C651
100n
R643
4K7
C644
150P
IC605B
CD4015
C645
150P
C646
150P
D610
1N4148
D611
1N4148
D612
1N4148
IC604C
CD4093
C650
100n
Z602
15V
IC604D
CD4093
IC604B
CD4093
IC604A
CD4093
TP601
2K
C643
150P
R633
47K
R634
3K9
IC605A
CD4015
IC604
IC605
BOSE
FRAMINGHAM, MA 01701-9168
PS1 Power Stand
Auxiliary Power Supply PCB, Rev. F
120V Version 1.1 Systems
230V Version 1.0 and 1.1 Systems
P/N: 283368
Sheet 2 of 2

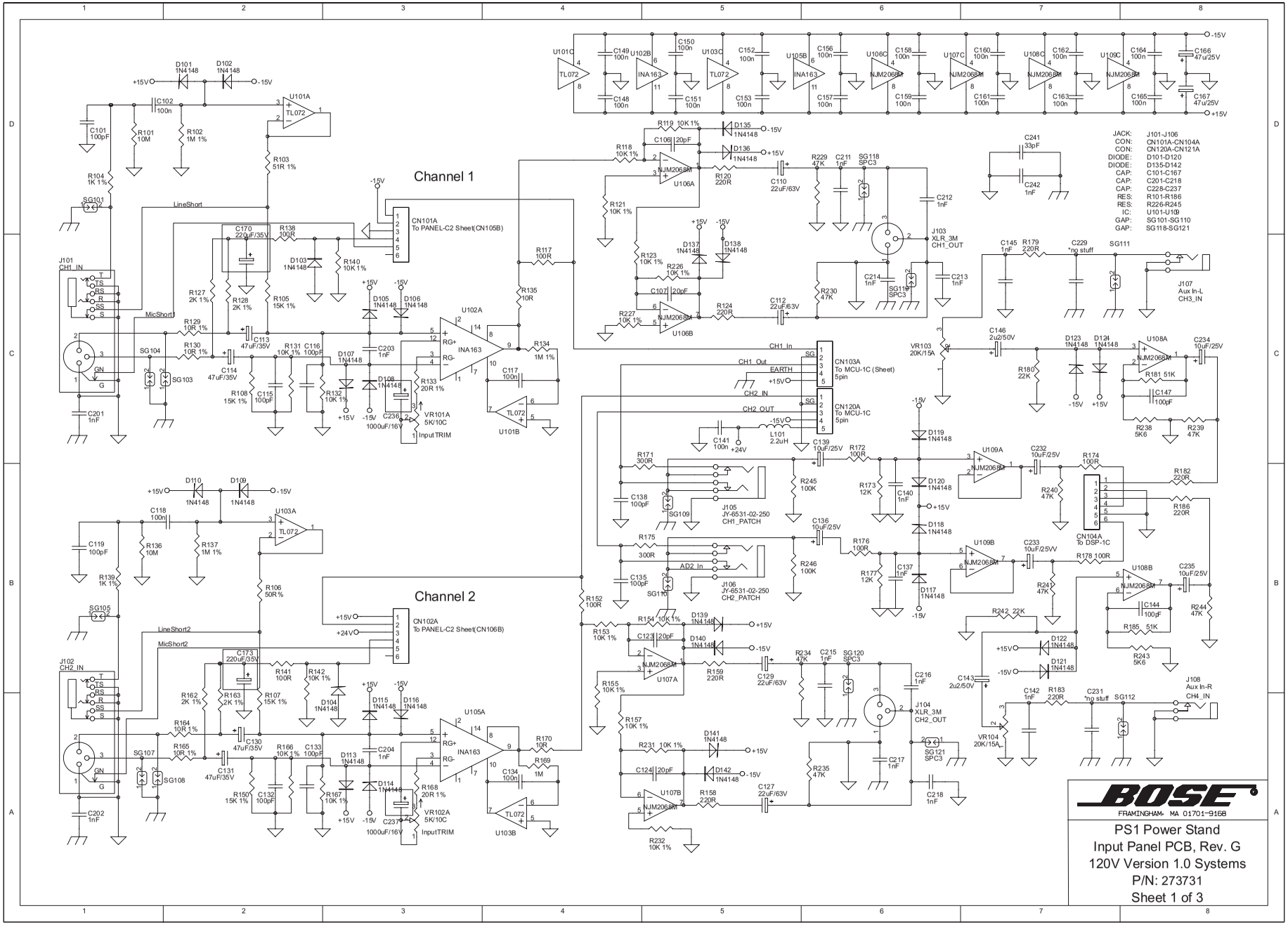
Channel 1
Channel 2
JACK: J101-J106
CON: CN101A-CN104A
CON: CN120A-CN121A
DIODE: D101-D120
DIODE: D135-D142
CAP: C101-C167
CAP: C201-C218
CAP: C228-C237
RES: R101-R186
RES: R226-R245
IC: U101-U109
GAP: SG101-SG110
GAP: SG118-SG121
CN101A To PANEL-C2 Sheet(CN105B)
CN102A To PANEL-C2 Sheet(CN106B)
CN103A To MCU-1C (Sheet) 5pin
CN120A To MCU-1C 5pin
CN104A To DSP-1C
J101 CH1_IN
J102 CH2_IN
J103 XLR_3M CH1_OUT
J104 XLR_3M CH2_OUT
J105 JY-6531-02-250 CH1_PATCH
J106 JY-6531-02-250 CH2_PATCH
J107 Aux In-L CH3_IN
J108 Aux In-R CH4_IN
LineShort
MicShort1
LineShort2
MicShort2
CH1_In
CH1_Out
EARTH
CH2_IN
CH2_OUT
AD2_In
Input TRIM
BOSE
FRAMINGHAM, MA 01701-9168
PS1 Power Stand
Input Panel PCB, Rev. G
120V Version 1.0 Systems
P/N: 273731
Sheet 1 of 3

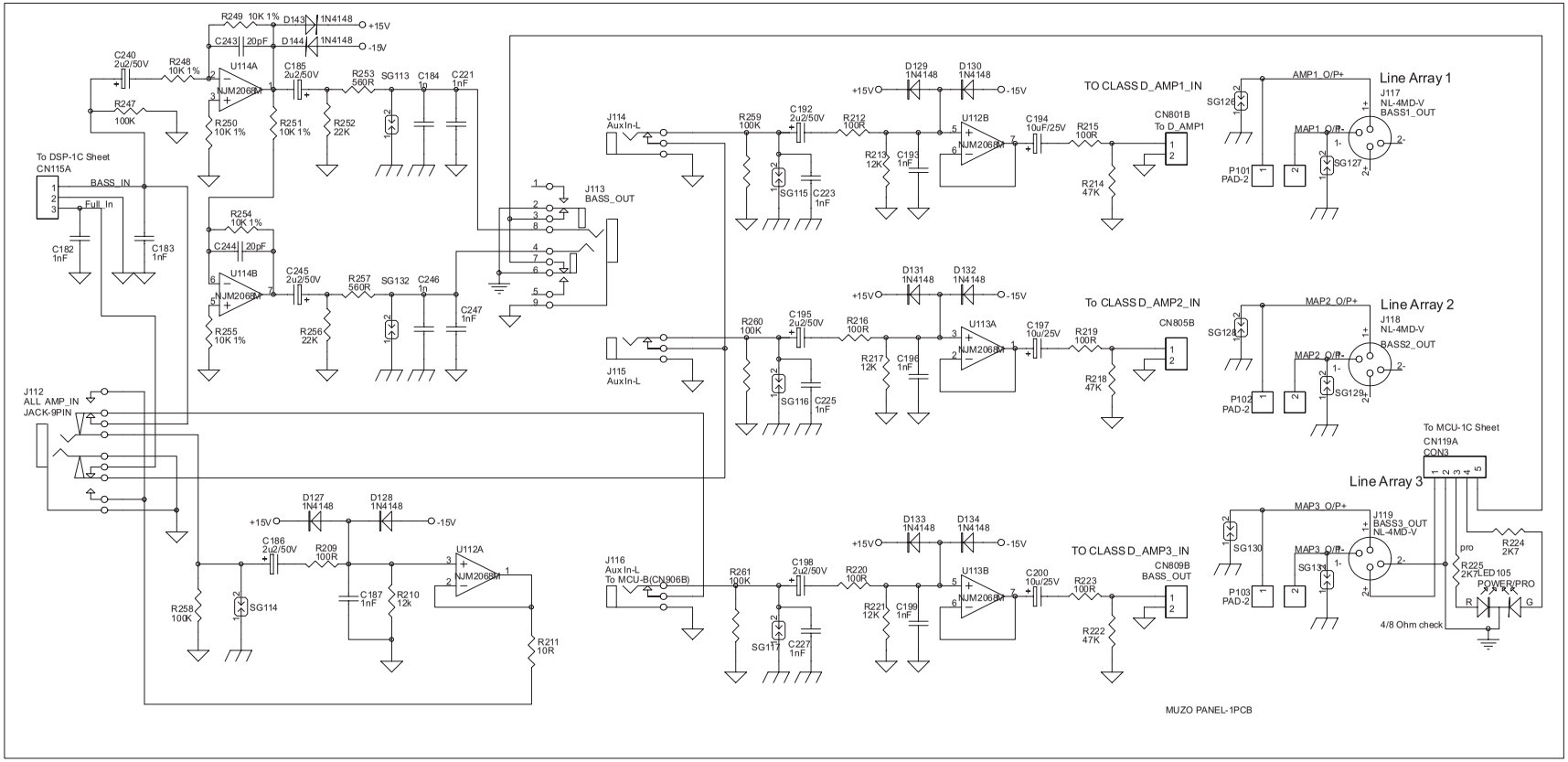

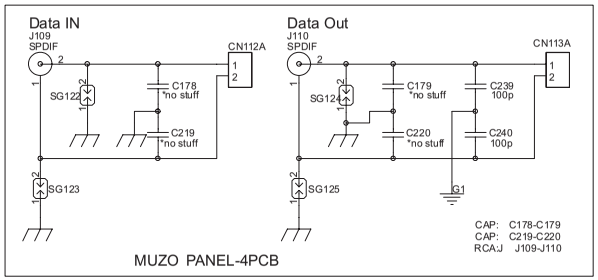

CAP:	C178-C200
CAP:	C219-C227
CAP:	C236-C240
RES:	R207-R225
RES:	R245-R246
IC:	U112-U114
LED:	LED105
PAD:	P101-P103
JACK:	J112-J119
JACK:	J107-J108
CON:	CN112A-CN119A
CON:	CN801B-CN809B
DIODE:	D127-D134
GAP:	SG113-SG117
GAP:	SG122-SG131

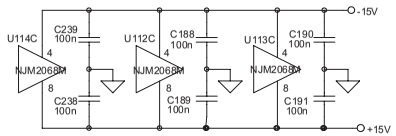

BOSE
FRAMINGHAM, MA 01701-9168

PS1 Power Stand
Input Panel PCB, Rev. G
120V Version 1.0 Systems
P/N: 273731
Sheet 2 of 3

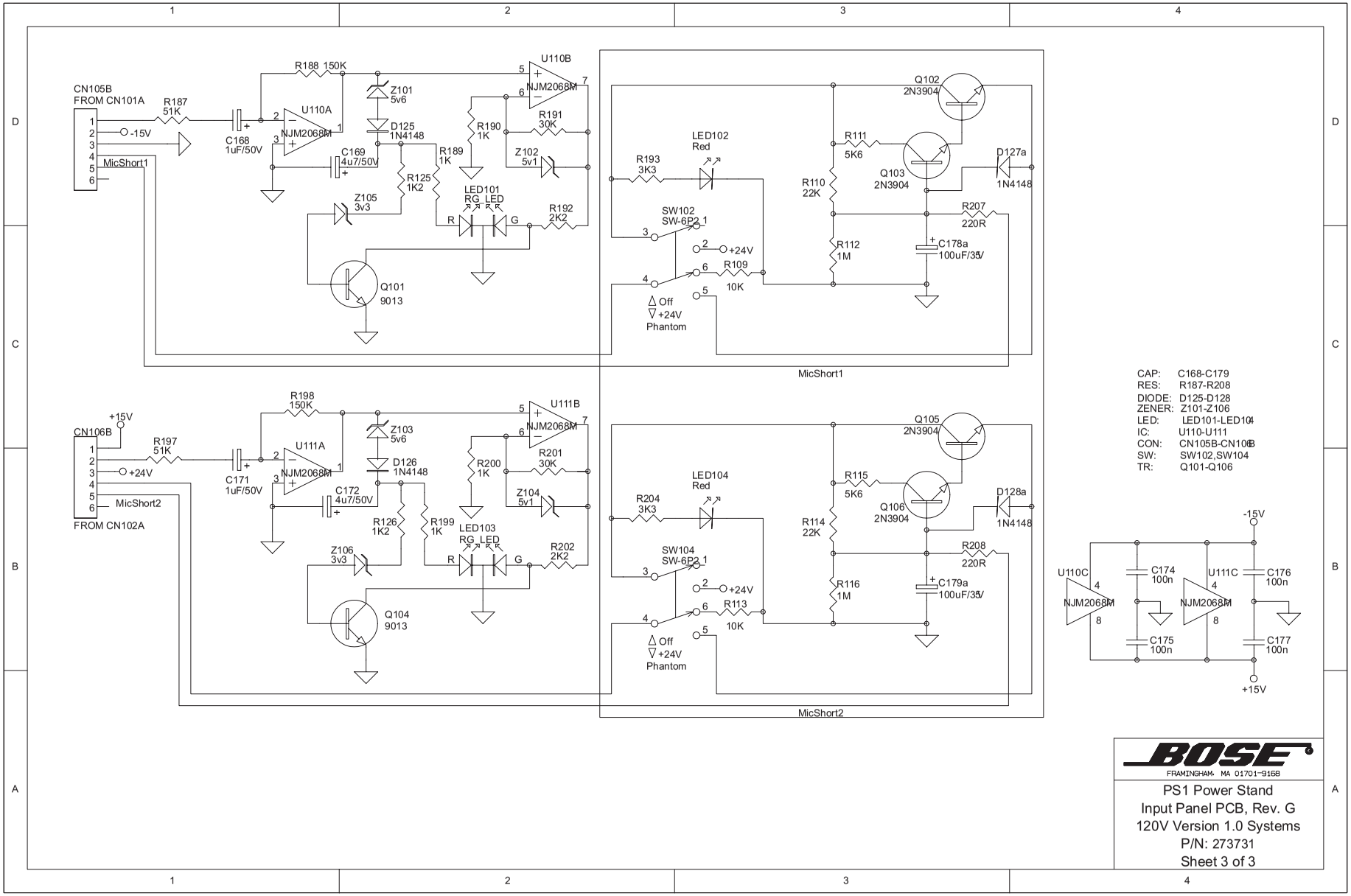
CN105B
FROM CN101A
R187
51K
-15V
MicShort1
C168
1uF/50V
R188 150K
U110A
NJM2068M
C169
4u7/50V
Z101
5v6
D125
1N4148
R125
1K2
Z105
3v3
Q101
9013
R189
1K
R190
1K
U110B
NJM2068M
R191
30K
Z102
5v1
LED101
RG LED
R
G
R192
2K2
LED102
Red
R193
3K3
SW102
SW-6P2
+24V
R109
10K
Off
+24V
Phantom
Q102
2N3904
R111
5K6
Q103
2N3904
D127a
1N4148
R110
22K
R112
1M
R207
220R
C178a
100uF/35V
MicShort1
CN106B
+15V
R197
51K
+24V
MicShort2
FROM CN102A
C171
1uF/50V
R198
150K
U111A
NJM2068M
C172
4u7/50V
Z103
5v6
D126
1N4148
R126
1K2
Z106
3v3
Q104
9013
R199
1K
R200
1K
U111B
NJM2068M
R201
30K
Z104
5v1
LED103
RG LED
R
G
R202
2K2
LED104
Red
R204
3K3
SW104
SW-6P2
+24V
R113
10K
Off
+24V
Phantom
Q105
2N3904
R115
5K6
Q106
2N3904
D128a
1N4148
R114
22K
R116
1M
R208
220R
C179a
100uF/35V
MicShort2
CAP: C168-C179
RES: R187-R208
DIODE: D125-D128
ZENER: Z101-Z106
LED: LED101-LED104
IC: U110-U111
CON: CN105B-CN106B
SW: SW102,SW104
TR: Q101-Q106
-15V
U110C
NJM2068M
C174
100n
C175
100n
U111C
NJM2068M
C176
100n
C177
100n
+15V
BOSE
FRAMINGHAM, MA 01701-9168
PS1 Power Stand
Input Panel PCB, Rev. G
120V Version 1.0 Systems
P/N: 273731
Sheet 3 of 3

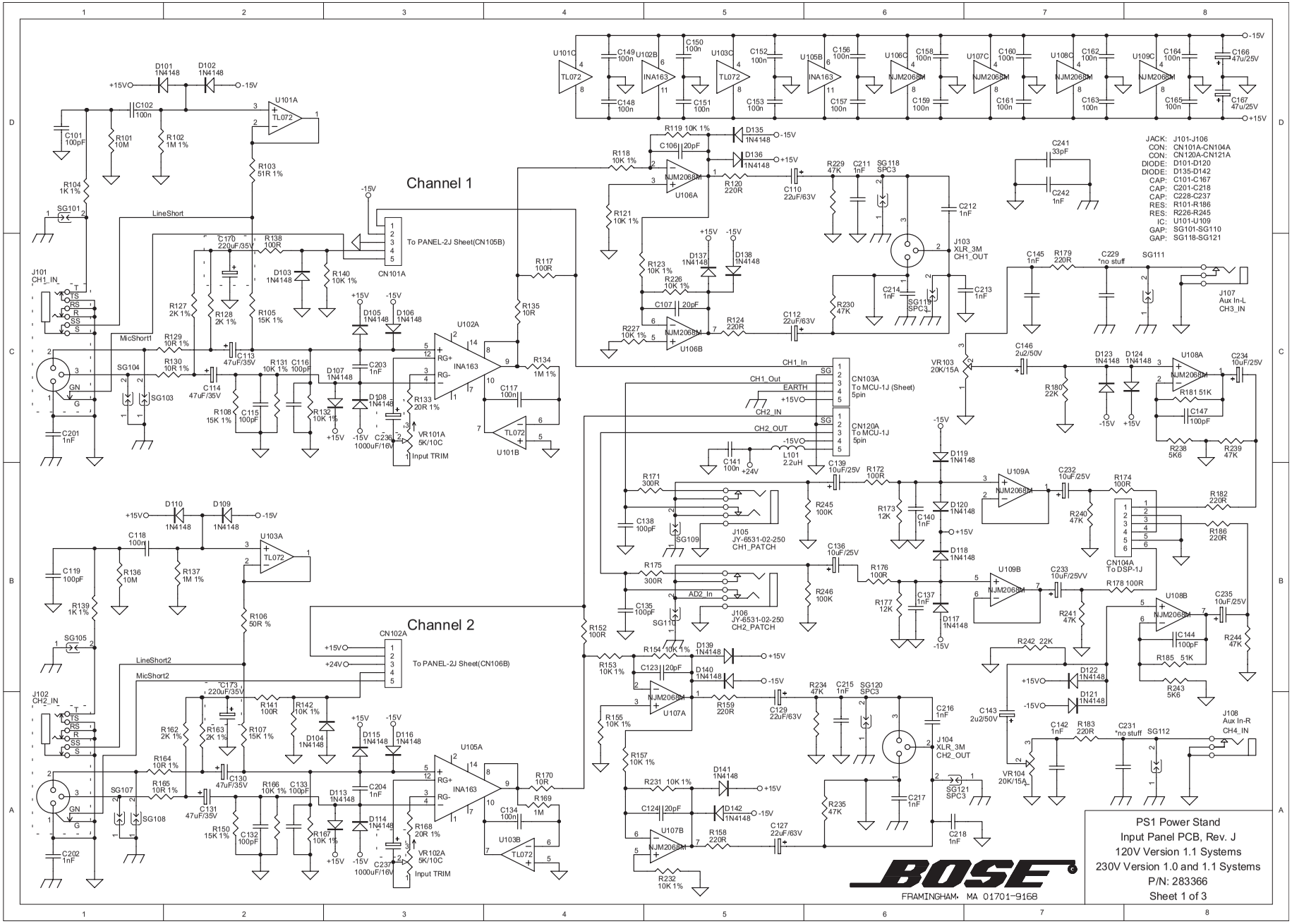
Channel 1
Channel 2
To PANEL-2J Sheet(CN105B)
To PANEL-2J Sheet(CN106B)
CN101A
CN102A
CN103A
To MCU-1J (Sheet) 5pin
CN120A
To MCU-1J 5pin
CN104A
To DSP-1J
J101 CH1_IN
J102 CH2_IN
J103 XLR_3M CH1_OUT
J104 XLR_3M CH2_OUT
J105 JY-6531-02-250 CH1_PATCH
J106 JY-6531-02-250 CH2_PATCH
J107 Aux In-L CH3_IN
J108 Aux In-R CH4_IN
VR101A 5K/10C Input TRIM
VR102A 5K/10C Input TRIM
VR103 20K/15A
VR104 20K/15A
LineShort
MicShort1
LineShort2
MicShort2
JACK: J101-J106
CON: CN101A-CN104A
CON: CN120A-CN121A
DIODE: D101-D120
DIODE: D135-D142
CAP: C101-C167
CAP: C201-C218
CAP: C228-C237
RES: R101-R186
RES: R226-R245
IC: U101-U109
GAP: SG101-SG110
GAP: SG118-SG121
BOSE
FRAMINGHAM, MA 01701-9168
PS1 Power Stand
Input Panel PCB, Rev. J
120V Version 1.1 Systems
230V Version 1.0 and 1.1 Systems
P/N: 283366
Sheet 1 of 3

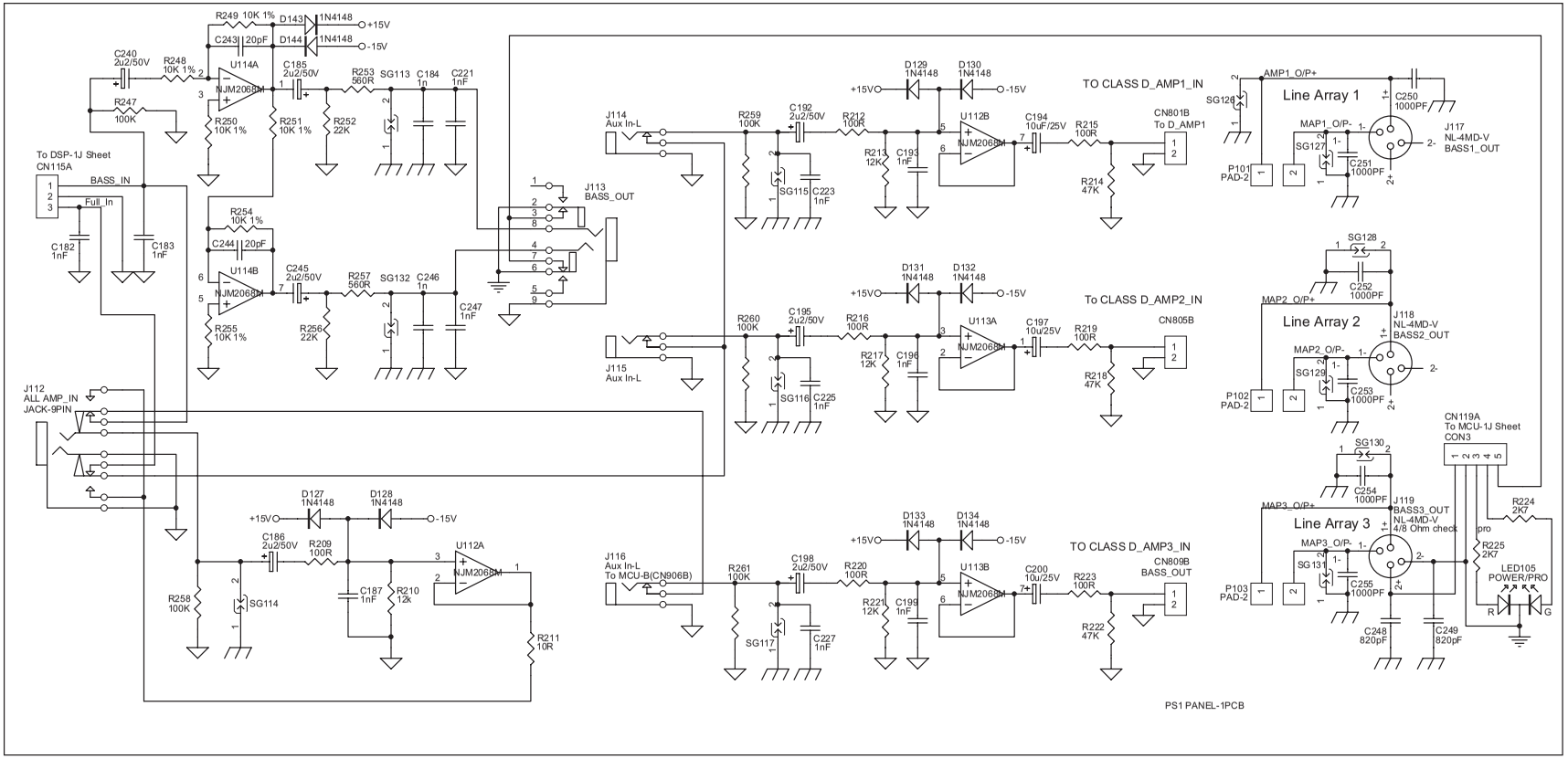

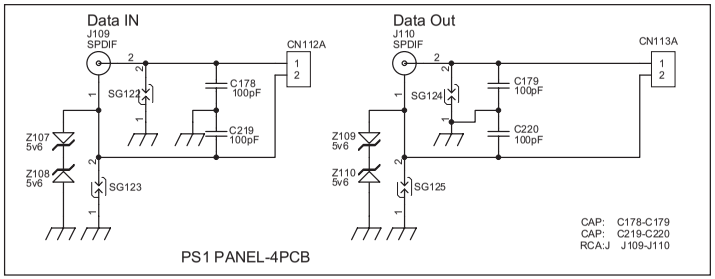

CAP:	C178-C200
CAP:	C219-C227
CAP:	C236-C240
RES:	R207-R225
RES:	R245-R246
IC:	U112-U114
LED:	LED105
PAD:	P101-P103
JACK:	J112-J119
JACK:	J107-J108
CON:	CN112A-CN119A
CON:	CN801B-CN809B
DIODE:	D127-D134
GAP:	SG113-SG117
GAP:	SG122-SG131

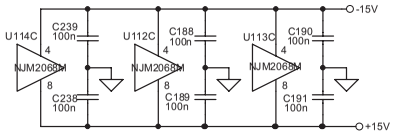

BOSE
FRAMINGHAM, MA 01701-9168

PS1 Power Stand
Input Panel PCB, Rev. J
120V Version 1.1 Systems
230V Version 1.0 and 1.1 Systems
P/N: 283366
Sheet 2 of 3

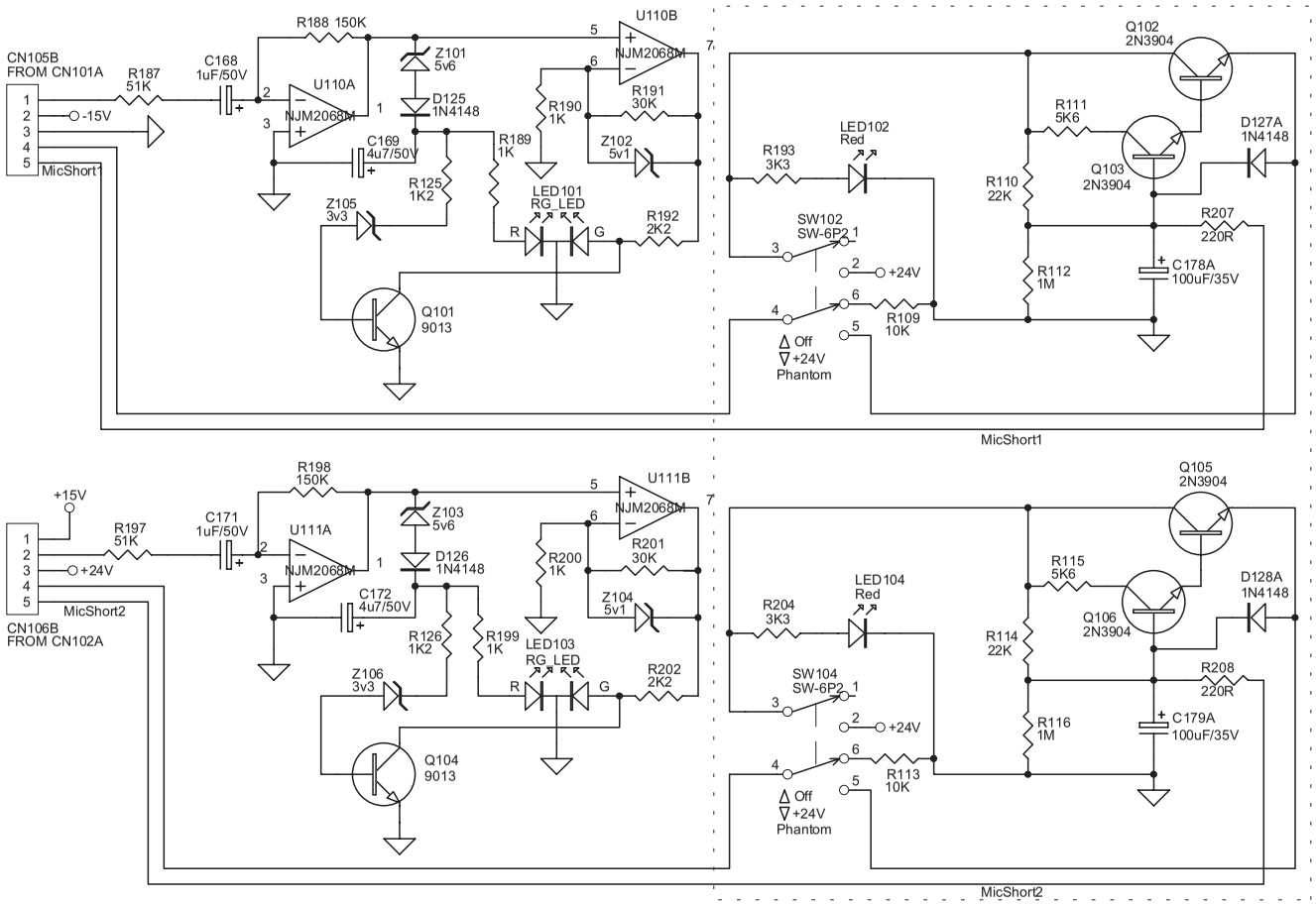

CAP: C168-C179
RES: R187-R208
DIODE: D125-D128
ZENER: Z101-Z106
LED: LED101-LED104
IC: U110-U111
CON: CN105B-CN106B
SW: SW102, SW104
TR: Q101-Q106

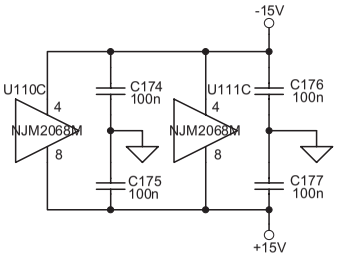

BOSE
FRAMINGHAM, MA 01701-9168

PS1 Power Stand
Input Panel PCB, Rev. J
120V Version 1.1 Systems
230V Version 1.0 and 1.1 Systems
P/N: 283366
Sheet 3 of 3

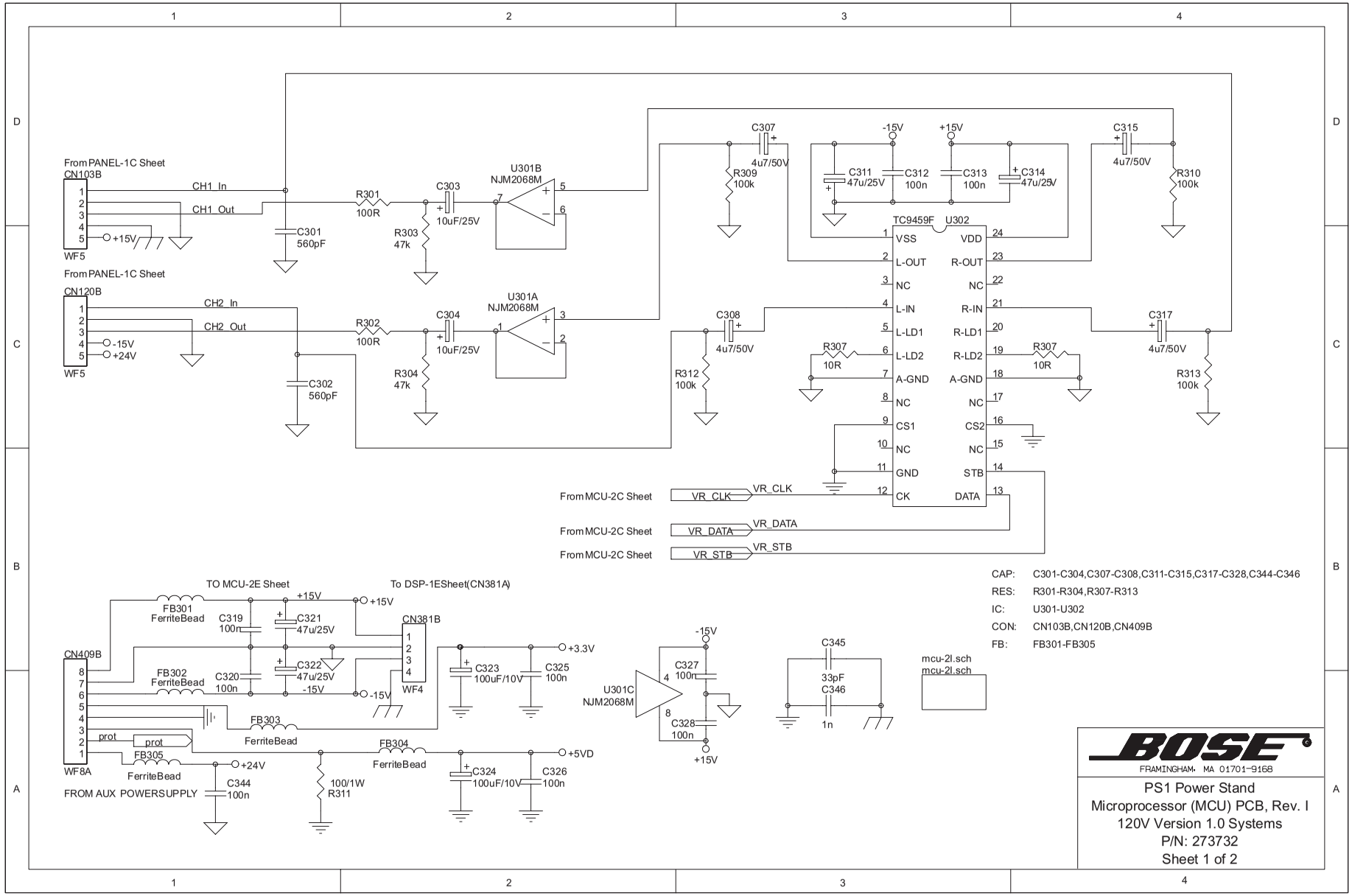

CAP: C301-C304,C307-C308,C311-C315,C317-C328,C344-C346
RES: R301-R304,R307-R313
IC: U301-U302
CON: CN103B,CN120B,CN409B
FB: FB301-FB305

BOSE
FRAMINGHAM, MA 01701-9168

PS1 Power Stand
Microprocessor (MCU) PCB, Rev. I
120V Version 1.0 Systems
P/N: 273732
Sheet 1 of 2

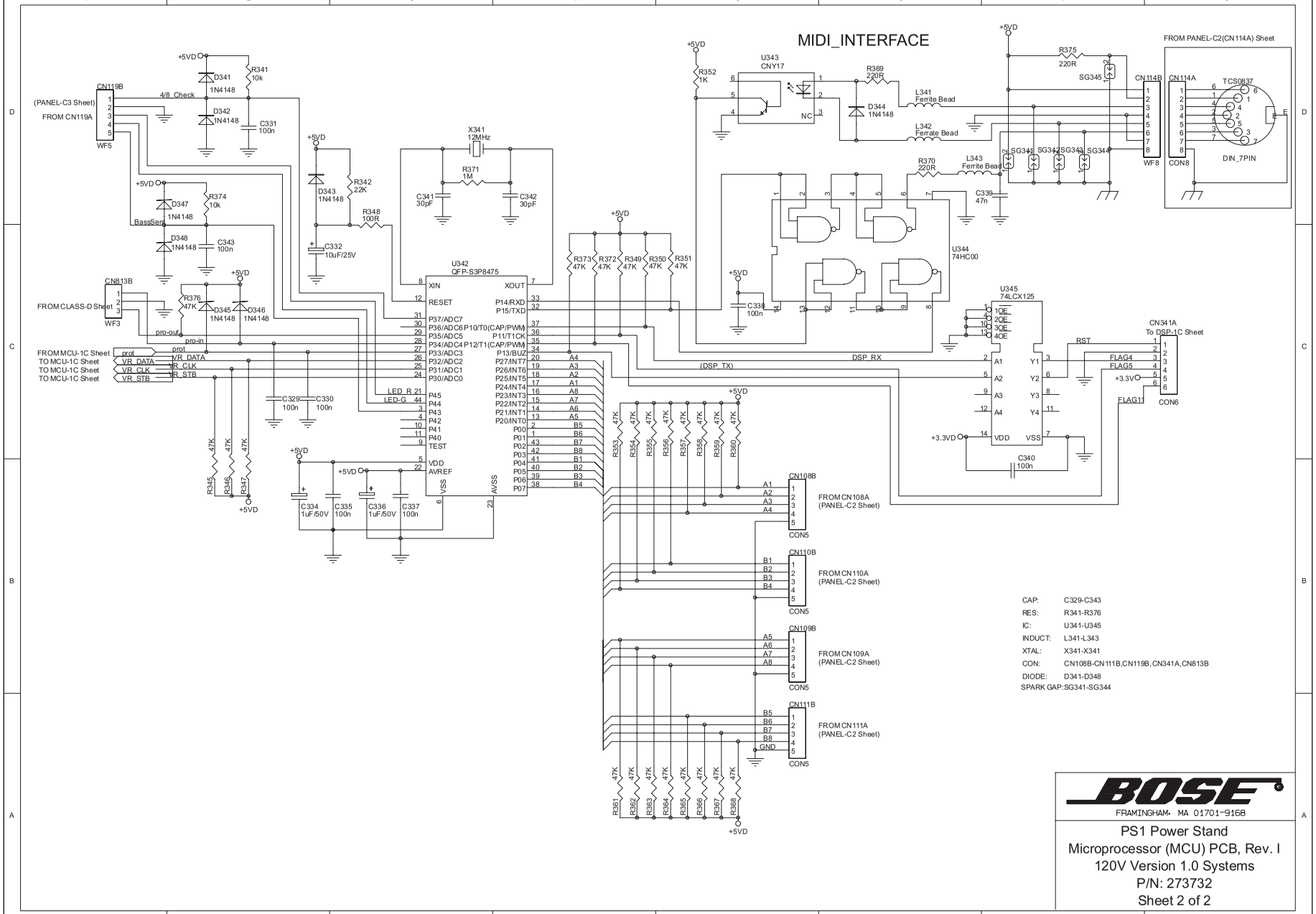
MIDI_INTERFACE
CN119B
(PANEL-C3 Sheet)
FROM CN119A
WF5
4/8_Check
BassSens
CN813B
FROM CLASS-D Sheet
WF3
pro-out
pro-in
FROM MCU-1C Sheet
TO MCU-1C Sheet
TO MCU-1C Sheet
TO MCU-1C Sheet
prot
VR_DATA
VR_CLK
VR_STB
U342
QFP-S3P8475
XIN
XOUT
RESET
P14/RXD
P15/TXD
P37/ADC7
P36/ADC6 P10/T0(CAP/PWM)
P35/ADC5 P11/T1CK
P34/ADC4 P12/T1(CAP/PWM)
P33/ADC3
P32/ADC2
P31/ADC1
P30/ADC0
P13/BUZ
P27/INT7
P26/INT6
P25/INT5
P24/INT4
P23/INT3
P22/INT2
P21/INT1
P20/INT0
P00
P01
P02
P03
P04
P05
P06
P07
P45
P44
P43
P42
P41
P40
TEST
VDD
AVREF
VSS
AVSS
LED_R
LED-G
X341
12MHz
U343
CNY17
NC
U344
74HC00
U345
74LCX125
1OE
2OE
3OE
4OE
A1
A2
A3
A4
Y1
Y2
Y3
Y4
VDD
VSS
DSP_RX
(DSP_TX)
RST
FLAG4
FLAG5
FLAG11
+3.3V
CN341A
To DSP-1C Sheet
CON6
FROM PANEL-C2(CN114A) Sheet
CN114A
CN114B
TCS0837
DIN_7PIN
CON8
WF8
CN108B
FROM CN108A
(PANEL-C2 Sheet)
CN110B
FROM CN110A
(PANEL-C2 Sheet)
CN109B
FROM CN109A
(PANEL-C2 Sheet)
CN111B
FROM CN111A
(PANEL-C2 Sheet)
CON5
GND
+5VD
CAP: C329-C343
RES: R341-R376
IC: U341-U345
INDUCT: L341-L343
XTAL: X341-X341
CON: CN108B-CN111B,CN119B,CN341A,CN813B
DIODE: D341-D348
SPARK GAP:SG341-SG344
BOSE
FRAMINGHAM, MA 01701-9168
PS1 Power Stand
Microprocessor (MCU) PCB, Rev. I
120V Version 1.0 Systems
P/N: 273732
Sheet 2 of 2

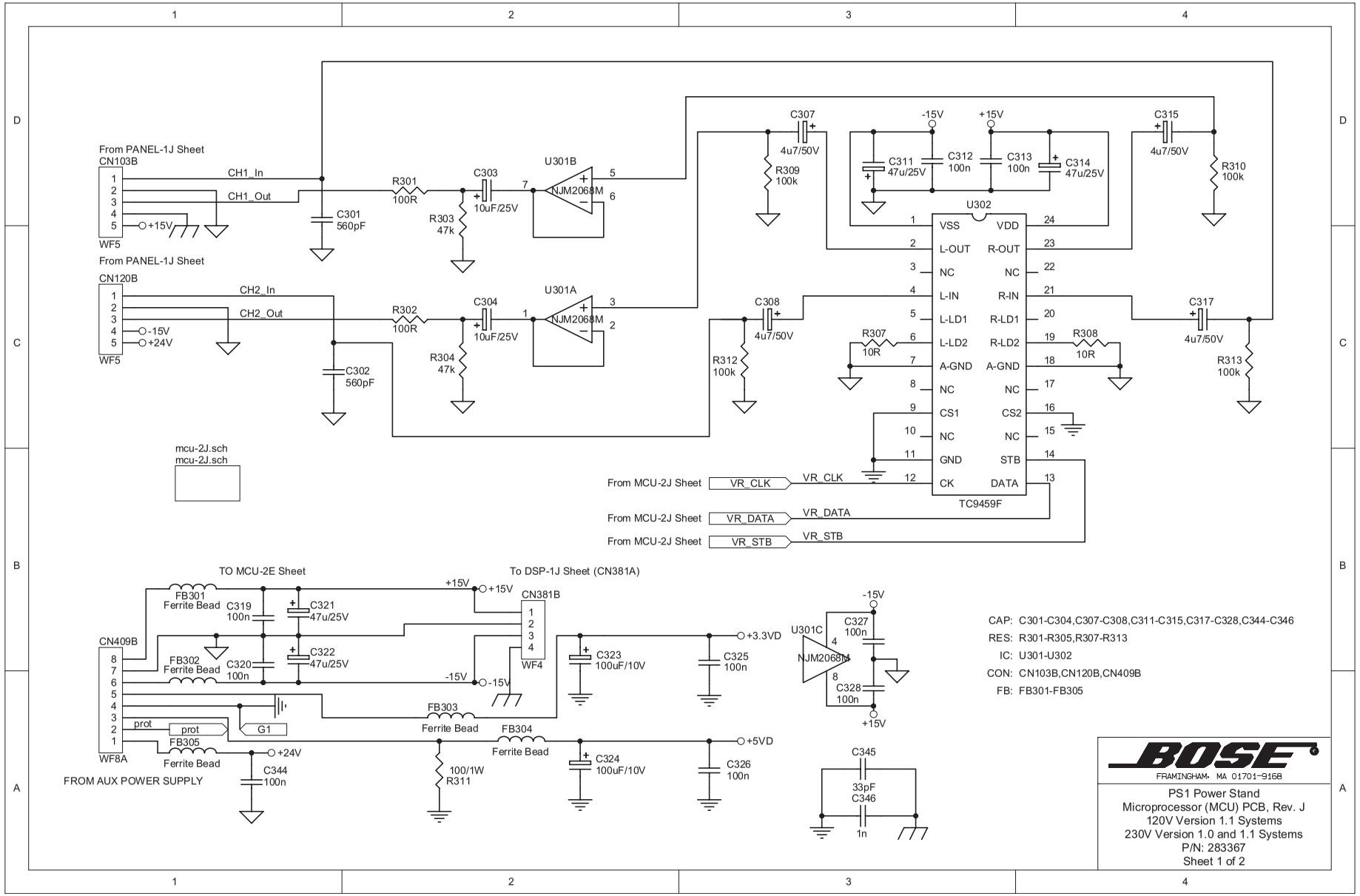

CAP: C301-C304,C307-C308,C311-C315,C317-C328,C344-C346
RES: R301-R305,R307-R313
IC: U301-U302
CON: CN103B,CN120B,CN409B
FB: FB301-FB305

BOSE
FRAMINGHAM, MA 01701-9168

PS1 Power Stand
Microprocessor (MCU) PCB, Rev. J
120V Version 1.1 Systems
230V Version 1.0 and 1.1 Systems
P/N: 283367
Sheet 1 of 2

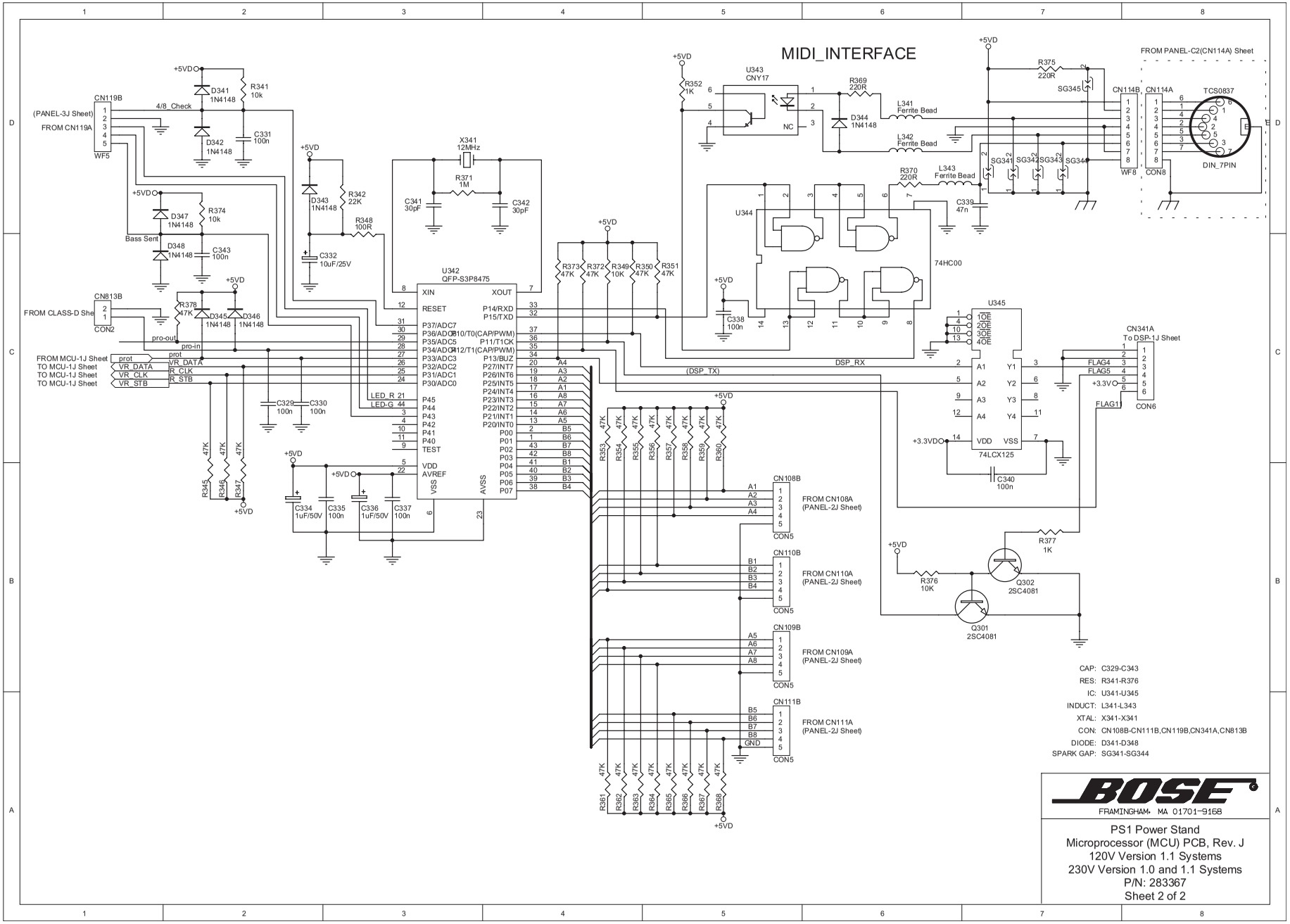
MIDI_INTERFACE
CN119B
(PANEL-3J Sheet)
FROM CN119A
WF5
4/8_Check
Bass Sent
CN813B
FROM CLASS-D She
CON2
pro-out
pro-in
FROM MCU-1J Sheet
TO MCU-1J Sheet
TO MCU-1J Sheet
TO MCU-1J Sheet
prot
VR_DATA
R_CLK
R_STB
U342
QFP-S3P8475
XIN
XOUT
RESET
P14/RXD
P15/TXD
P37/ADC7
P36/ADC6/T0(CAP/PWM)
P35/ADC5
P11/T1CK
P34/ADC4/T1(CAP/PWM)
P33/ADC3
P13/BUZ
P32/ADC2
P27/INT7
P31/ADC1
P26/INT6
P30/ADC0
P25/INT5
P24/INT4
P45
P23/INT3
P44
P22/INT2
P43
P21/INT1
P42
P20/INT0
P41
P00
P40
P01
TEST
P02
P03
VDD
P04
AVREF
P05
VSS
AVSS
P06
P07
LED_R
LED-G
X341
12MHz
R371
1M
C341
30pF
C342
30pF
U343
CNY17
R352
1K
R369
220R
D344
1N4148
L341
Ferrite Bead
L342
Ferrite Bead
L343
Ferrite Bead
R370
220R
C339
47n
U344
74HC00
C338
100n
U345
74LCX125
C340
100n
DSP_RX
(DSP_TX)
CN341A
To DSP-1J Sheet
FLAG4
FLAG5
+3.3V
FLAG1
CON6
R375
220R
SG345
SG341
SG342
SG343
SG344
CN114B
CN114A
WF8
CON8
FROM PANEL-C2(CN114A) Sheet
TCS0837
DIN_7PIN
R377
1K
R376
10K
Q302
2SC4081
Q301
2SC4081
CN108B
FROM CN108A
(PANEL-2J Sheet)
CN110B
FROM CN110A
(PANEL-2J Sheet)
CN109B
FROM CN109A
(PANEL-2J Sheet)
CN111B
FROM CN111A
(PANEL-2J Sheet)
CON5
+5VD
+3.3VD
CAP: C329-C343
RES: R341-R376
IC: U341-U345
INDUCT: L341-L343
XTAL: X341-X341
CON: CN108B-CN111B,CN119B,CN341A,CN813B
DIODE: D341-D348
SPARK GAP: SG341-SG344
BOSE
FRAMINGHAM, MA 01701-9168
PS1 Power Stand
Microprocessor (MCU) PCB, Rev. J
120V Version 1.1 Systems
230V Version 1.0 and 1.1 Systems
P/N: 283367
Sheet 2 of 2

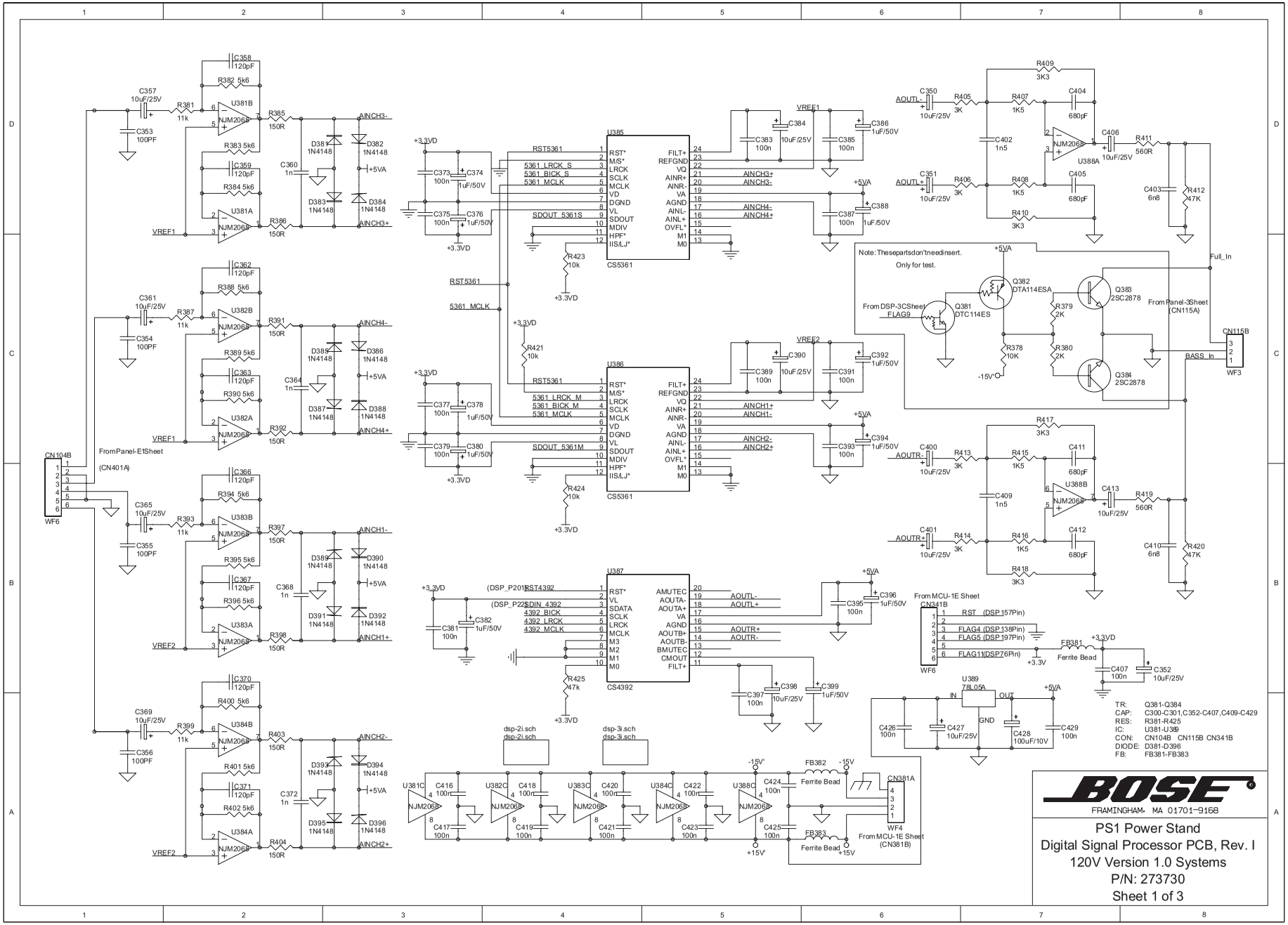
U385
CS5361
U386
CS5361
U387
CS4392
U382B
U382A
U383B
U383A
U384B
U384A
U381B
U381A
U388A
U388B
U389
78L05A
CN104B
WF6
CN115B
WF3
CN381A
WF4
CN341B
WF6
Q381 DTC114ES
Q382 DTA114ESA
Q383 2SC2878
Q384 2SC2878
Note: Thesepartsdon'tneedinsert.
Only for test.
From DSP-3CSheet
FLAG9
From Panel-3Sheet
(CN115A)
Full_In
BASS_In
From Panel-E1Sheet
(CN401A)
From MCU-1E Sheet
CN341B
From MCU-1E Sheet
(CN381B)
RST (DSP 157Pin)
FLAG4 (DSP 138Pin)
FLAG5 (DSP 197Pin)
FLAG11(DSP 76Pin)
dsp-2i.sch
dsp-3i.sch
TR: Q381-Q384
CAP: C300-C301,C352-C407,C409-C429
RES: R381-R425
IC: U381-U389
CON: CN104B CN115B CN341B
DIODE: D381-D396
FB: FB381-FB383
BOSE
FRAMINGHAM, MA 01701-9168
PS1 Power Stand
Digital Signal Processor PCB, Rev. I
120V Version 1.0 Systems
P/N: 273730
Sheet 1 of 3

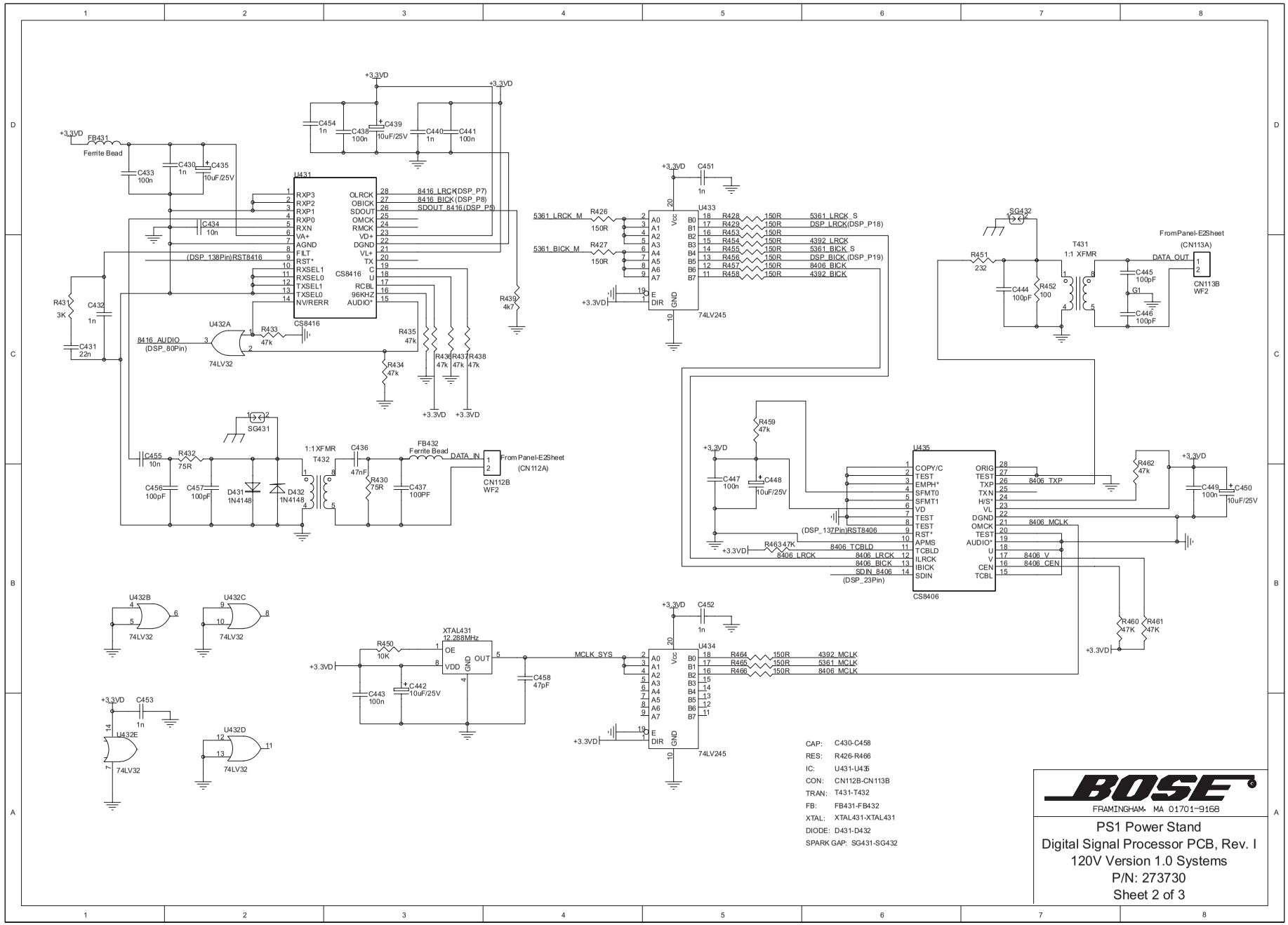
U431
CS8416
RXP3
RXP2
RXP1
RXP0
RXN
VA+
AGND
FILT
RST*
RXSEL1
RXSEL0
TXSEL1
TXSEL0
NV/RERR
OLRCK
OBICK
SDOUT
OMCK
RMCK
VD+
DGND
VL+
TX
C
U
RCBL
96KHZ
AUDIO*
8416_LRCK(DSP_P7)
8416_BICK(DSP_P8)
SDOUT_8416(DSP_P5)
(DSP_138Pin)RST8416
8416_AUDIO
(DSP_80Pin)
U432A
74LV32
U433
74LV245
5361_LRCK_M
5361_BICK_M
5361_LRCK_S
DSP_LRCK(DSP_P18)
DSP_BICK(DSP_P19)
8406_BICK
4392_BICK
4392_LRCK
5361_BICK_S
SG432
T431
1:1 XFMR
FromPanel-E2Sheet
(CN113A)
DATA_OUT
CN113B
WF2
SG431
1:1 XFMR
T432
DATA_IN
From Panel-E2Sheet
(CN112A)
CN112B
WF2
U435
CS8406
COPY/C
TEST
EMPH*
SFMT0
SFMT1
VD
TEST
TEST
RST*
APMS
TCBLD
ILRCK
IBICK
SDIN
ORIG
TEST
TXP
TXN
H/S*
VL
DGND
OMCK
TEST
AUDIO*
U
V
CEN
TCBL
(DSP_137Pin)RST8406
8406_TCBLD
8406_LRCK
8406_BICK
SDIN_8406
(DSP_23Pin)
8406_TXP
8406_MCLK
8406_V
8406_CEN
U432B
U432C
U432D
U432E
74LV32
XTAL431
12.288MHz
MCLK_SYS
U434
74LV245
4392_MCLK
5361_MCLK
8406_MCLK
CAP: C430-C458
RES: R426-R466
IC: U431-U435
CON: CN112B-CN113B
TRAN: T431-T432
FB: FB431-FB432
XTAL: XTAL431-XTAL431
DIODE: D431-D432
SPARK GAP: SG431-SG432
BOSE
FRAMINGHAM, MA 01701-9168
PS1 Power Stand
Digital Signal Processor PCB, Rev. I
120V Version 1.0 Systems
P/N: 273730
Sheet 2 of 3

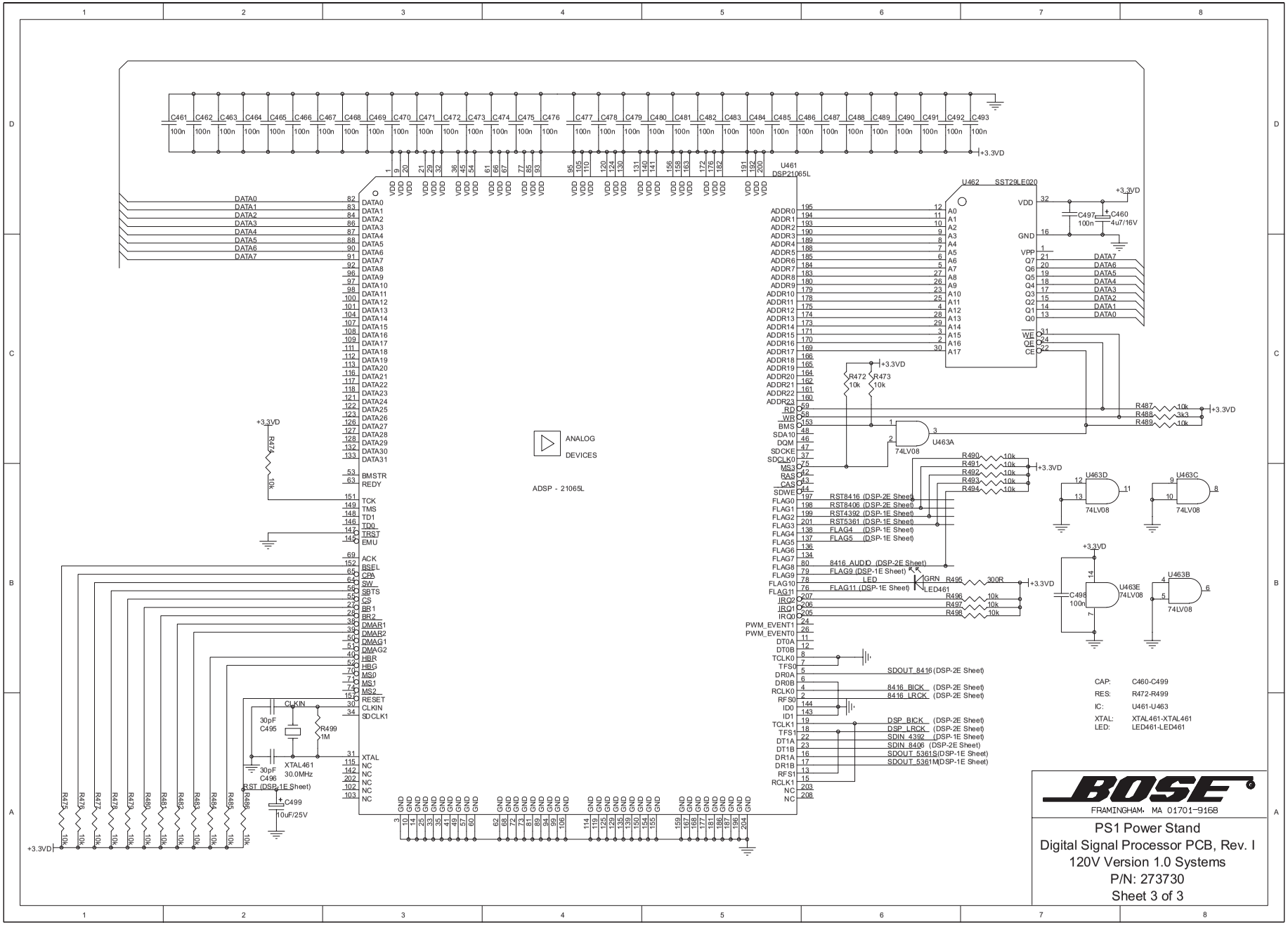
U461
DSP21065L
U462 SST29LE020
ANALOG
DEVICES
ADSP - 21065L
CAP: C460-C499
RES: R472-R499
IC: U461-U463
XTAL: XTAL461-XTAL461
LED: LED461-LED461
BOSE
FRAMINGHAM, MA 01701-9168
PS1 Power Stand
Digital Signal Processor PCB, Rev. I
120V Version 1.0 Systems
P/N: 273730
Sheet 3 of 3

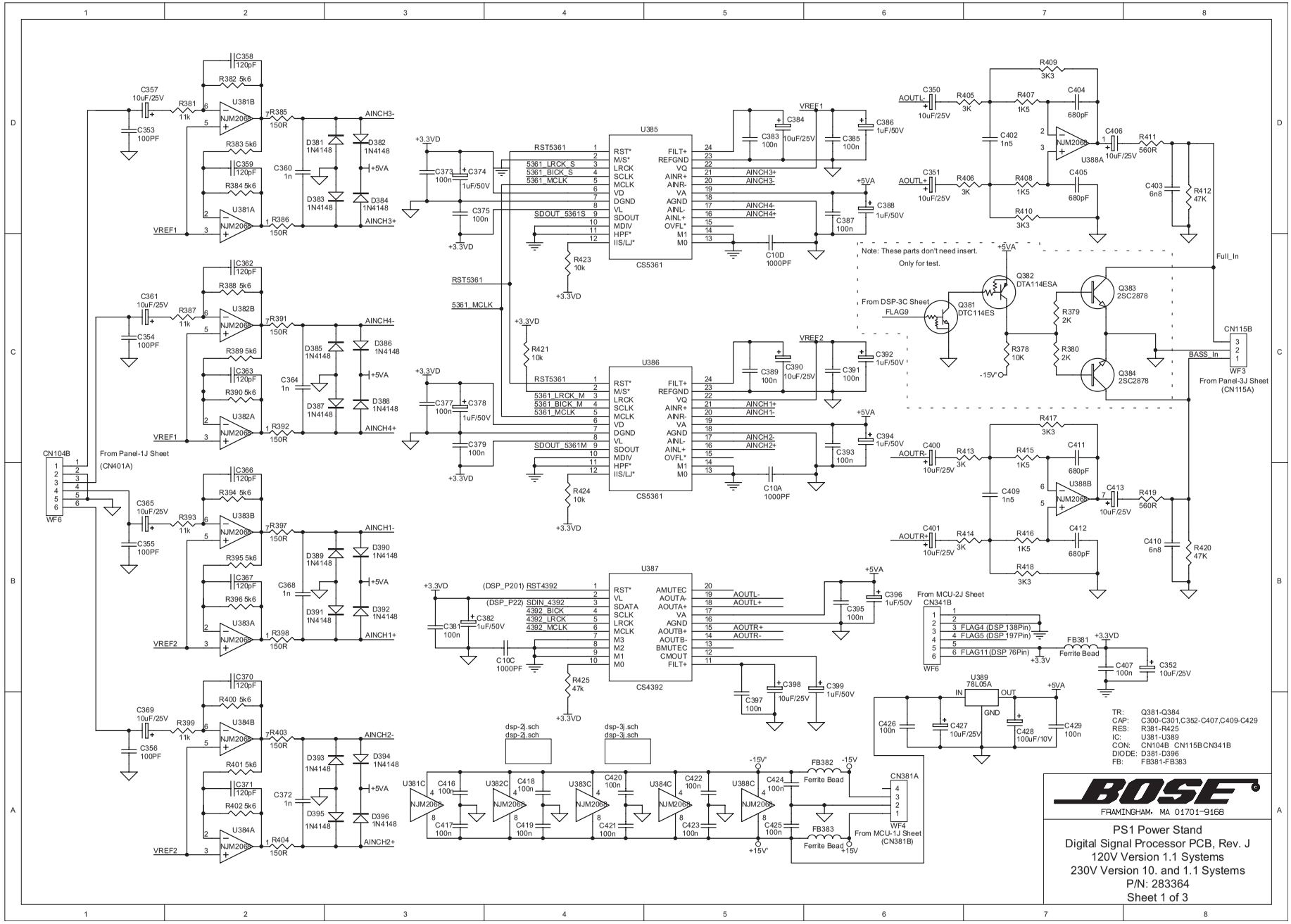
U385
CS5361
U386
CS5361
U387
CS4392
U381A
U381B
U382A
U382B
U383A
U383B
U384A
U384B
U388A
U388B
U389
78L05A
CN104B
From Panel-1J Sheet
(CN401A)
CN115B
From Panel-3J Sheet
(CN115A)
CN381A
From MCU-1J Sheet
(CN381B)
CN341B
From MCU-2J Sheet
Note: These parts don't need insert.
Only for test.
From DSP-3C Sheet
FLAG9
Q381
DTC114ES
Q382
DTA114ESA
Q383
2SC2878
Q384
2SC2878
dsp-2j.sch
dsp-3j.sch
FLAG4 (DSP 138Pin)
FLAG5 (DSP 197Pin)
FLAG11(DSP 76Pin)
Ferrite Bead
FRAMINGHAM, MA 01701-9168
TR: Q381-Q384
CAP: C300-C301,C352-C407,C409-C429
RES: R381-R425
IC: U381-U389
CON: CN104B CN115B CN341B
DIODE: D381-D396
FB: FB381-FB383
PS1 Power Stand
Digital Signal Processor PCB, Rev. J
120V Version 1.1 Systems
230V Version 10. and 1.1 Systems
P/N: 283364
Sheet 1 of 3

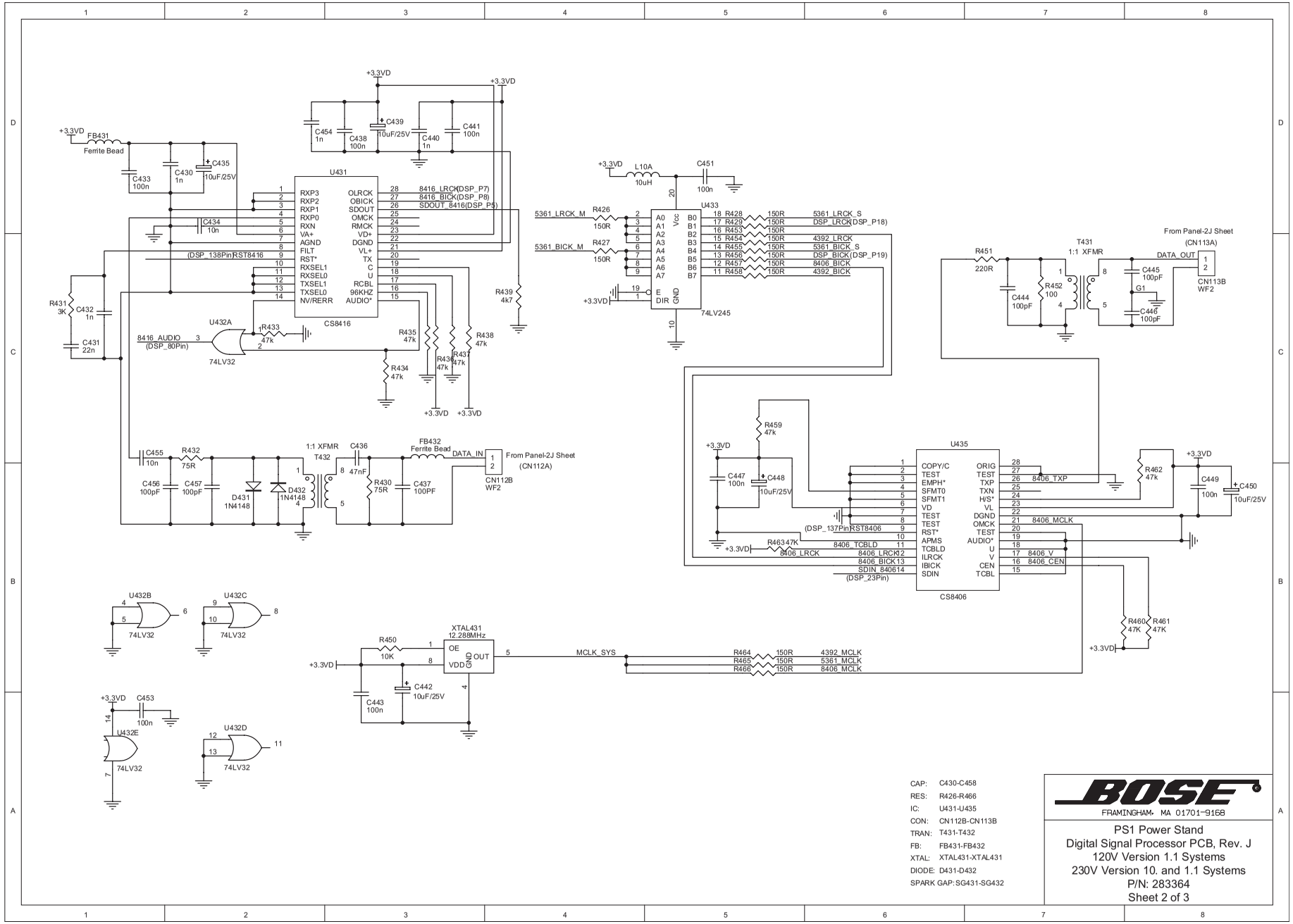

CAP: C430-C458
RES: R426-R466
IC: U431-U435
CON: CN112B-CN113B
TRAN: T431-T432
FB: FB431-FB432
XTAL: XTAL431-XTAL431
DIODE: D431-D432
SPARK GAP: SG431-SG432

BOSE
FRAMINGHAM, MA 01701-9168

PS1 Power Stand
Digital Signal Processor PCB, Rev. J
120V Version 1.1 Systems
230V Version 10. and 1.1 Systems
P/N: 283364
Sheet 2 of 3

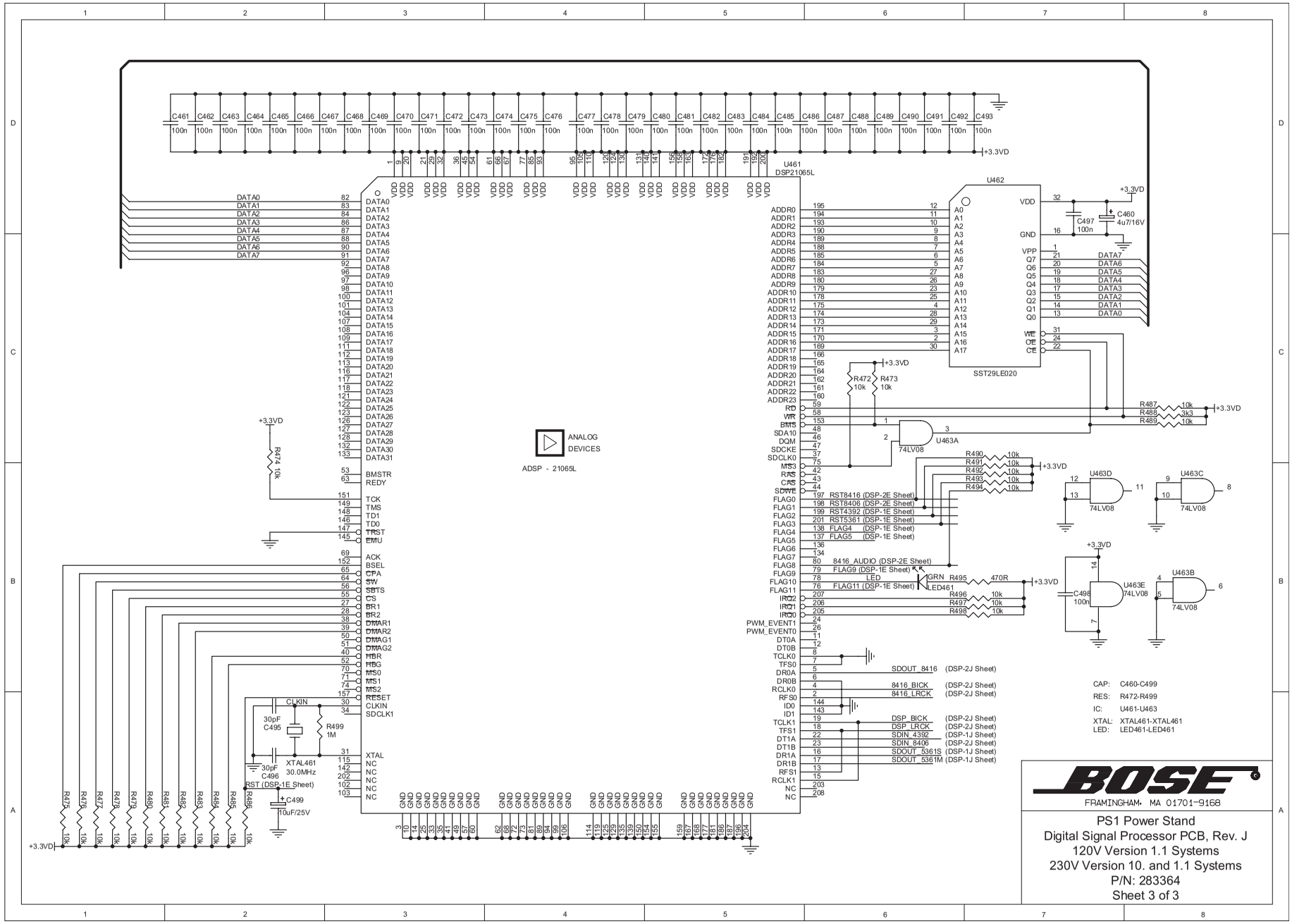
U461
DSP21065L
U462
SST29LE020
ANALOG DEVICES
ADSP - 21065L
+3.3VD
CAP: C460-C499
RES: R472-R499
IC: U461-U463
XTAL: XTAL461-XTAL461
LED: LED461-LED461
BOSE
FRAMINGHAM, MA 01701-9168
PS1 Power Stand
Digital Signal Processor PCB, Rev. J
120V Version 1.1 Systems
230V Version 10. and 1.1 Systems
P/N: 283364
Sheet 3 of 3

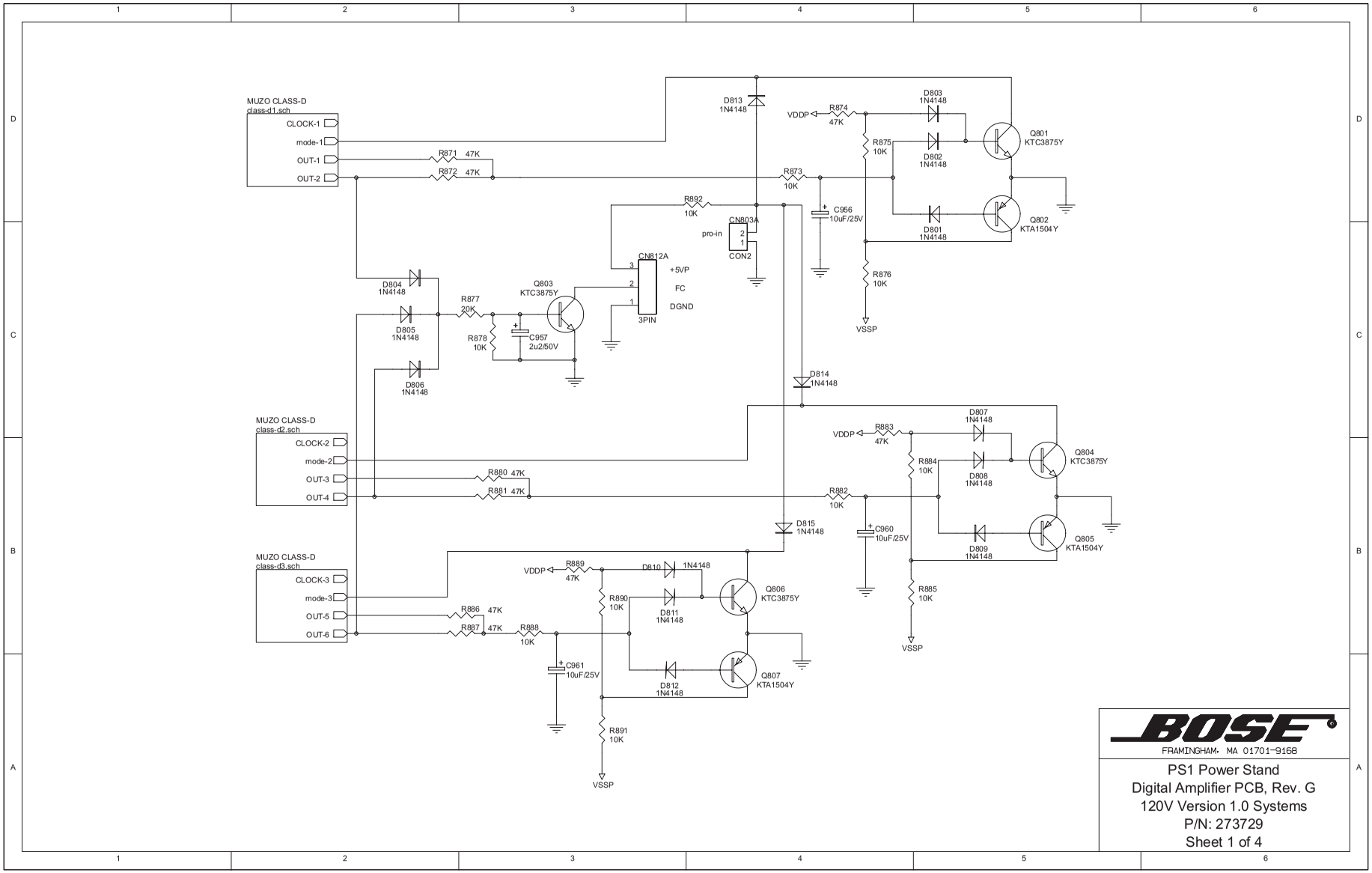

BOSE
FRAMINGHAM, MA 01701-9168

PS1 Power Stand
Digital Amplifier PCB, Rev. G
120V Version 1.0 Systems
P/N: 273729
Sheet 1 of 4

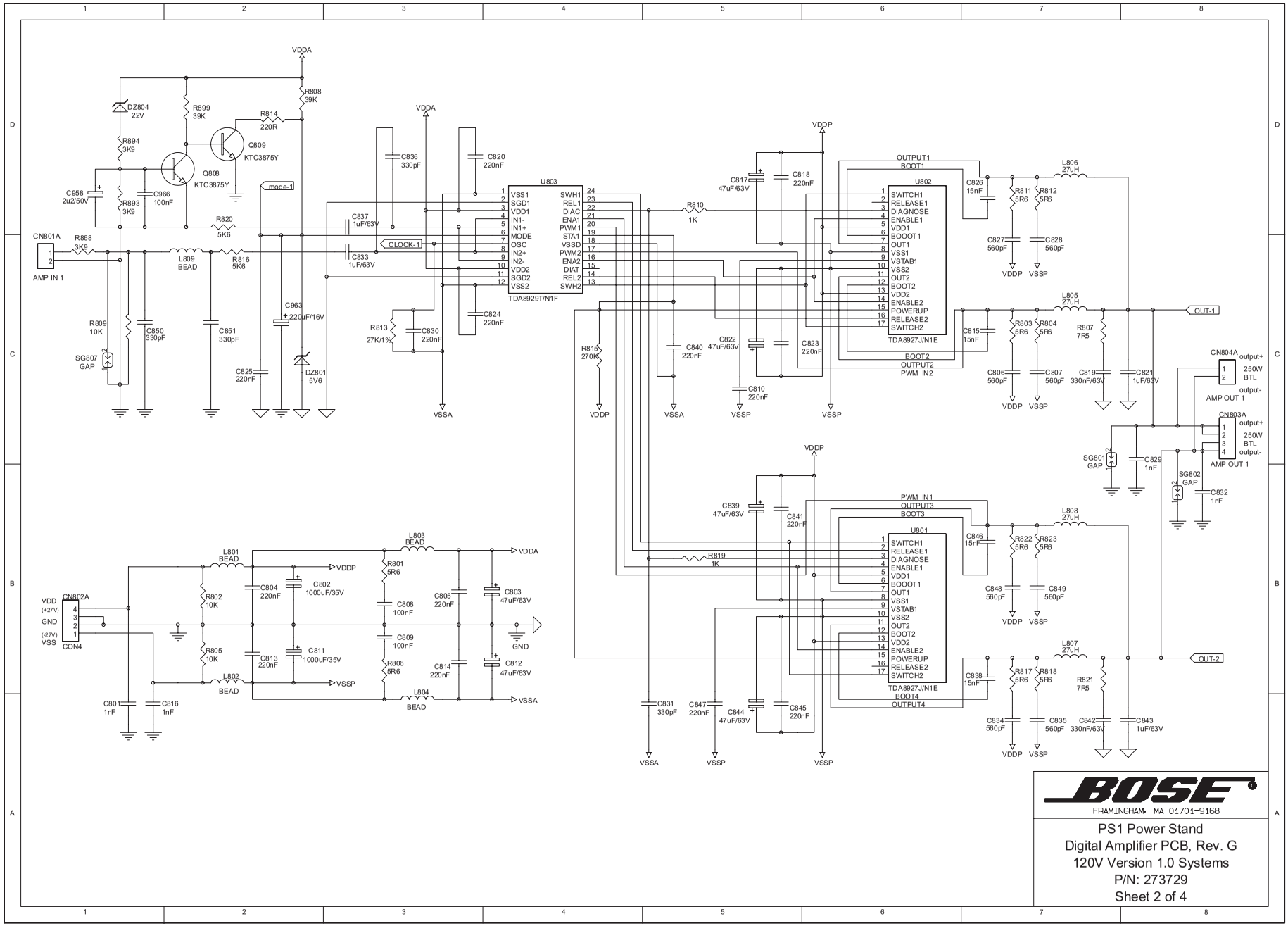

BOSE

FRAMINGHAM, MA 01701-9168

PS1 Power Stand
Digital Amplifier PCB, Rev. G
120V Version 1.0 Systems
P/N: 273729
Sheet 2 of 4

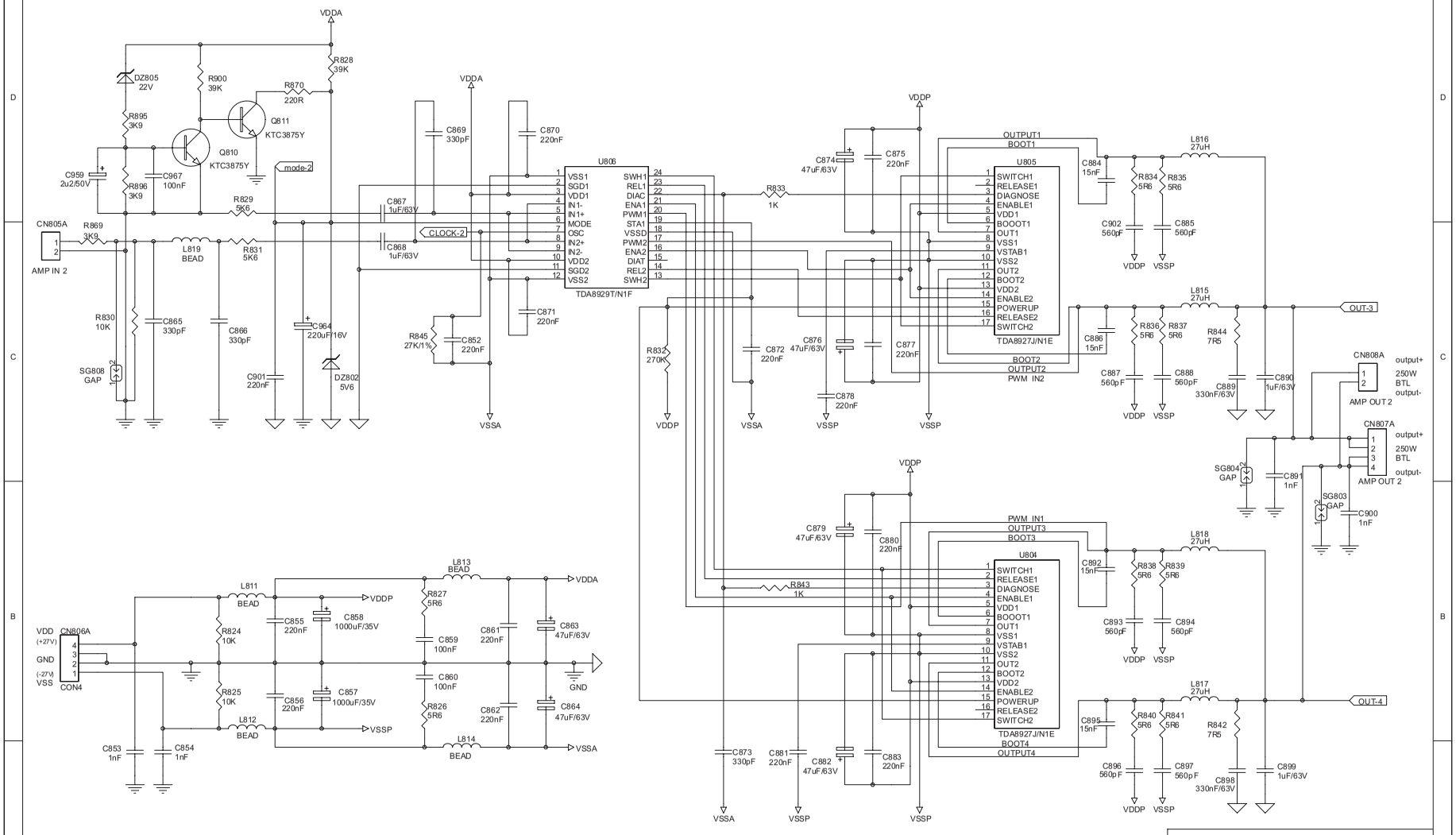

BOSE
FRAMINGHAM, MA 01701-9168

PS1 Power Stand
Digital Amplifier PCB, Rev. G
120V Version 1.0 Systems
P/N: 273729
Sheet 3 of 4

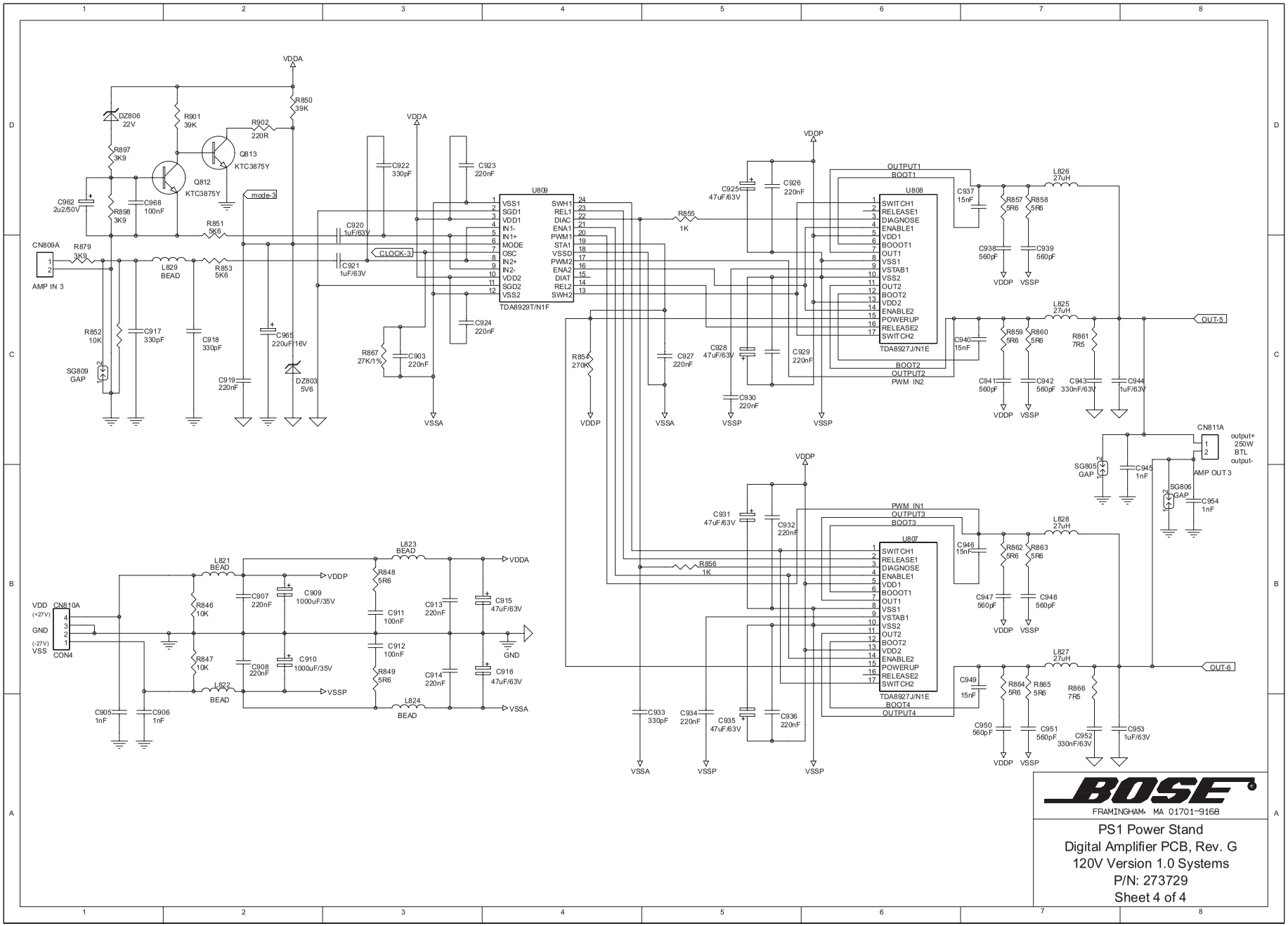
VDDA
R850 39K
DZ806 22V
R901 39K
R902 220R
Q813 KTC3875Y
Q812 KTC3875Y
R897 3K9
R898 3K9
C962 2u2/50V
C968 100nF
R851 5K6
mode-3
CN809A
AMP IN 3
R879 3K9
L829 BEAD
R853 5K6
R852 10K
C917 330pF
C918 330pF
SG809 GAP
C919 220nF
C965 220uF/16V
DZ803 5V6
C922 330pF
C923 220nF
C920 1uF/63V
C921 1uF/63V
CLOCK-3
U809
VSS1
SGD1
VDD1
IN1-
IN1+
MODE
OSC
IN2+
IN2-
VDD2
SGD2
VSS2
SWH1
REL1
DIAC
ENA1
PWM1
STA1
VSSD
PWM2
ENA2
DIAT
REL2
SWH2
TDA8929T/N1F
C924 220nF
R867 27K/1%
C903 220nF
VSSA
R855 1K
R854 270K
VDDP
C925 47uF/63V
C926 220nF
C927 220nF
C928 47uF/63V
C929 220nF
C930 220nF
VSSP
OUTPUT1
BOOT1
U808
SWITCH1
RELEASE1
DIAGNOSE
ENABLE1
VDD1
BOOOT1
OUT1
VSS1
VSTAB1
VSS2
OUT2
BOOT2
VDD2
ENABLE2
POWERUP
RELEASE2
SWITCH2
TDA8927J/N1E
BOOT2
OUTPUT2
PWM IN2
C937 15nF
L826 27uH
R857 5R6
R858 5R6
C938 560pF
C939 560pF
C940 15nF
L825 27uH
R859 5R6
R860 5R6
R861 7R5
C941 560pF
C942 560pF
C943 330nF/63V
C944 1uF/63V
OUT-5
CN811A
output+
250W
BTL
output-
AMP OUT 3
SG805 GAP
C945 1nF
SG806 GAP
C954 1nF
C931 47uF/63V
C932 220nF
PWM IN1
OUTPUT3
BOOT3
U807
TDA8927J/N1E
BOOT4
OUTPUT4
R856 1K
C946 15nF
L828 27uH
R862 5R6
R863 5R6
C947 560pF
C948 560pF
C949 15nF
L827 27uH
R864 5R6
R865 5R6
R866 7R5
C950 560pF
C951 560pF
C952 330nF/63V
C953 1uF/63V
OUT-6
C933 330pF
C934 220nF
C935 47uF/63V
C936 220nF
L821 BEAD
L822 BEAD
L823 BEAD
L824 BEAD
R846 10K
R847 10K
C907 220nF
C908 220nF
C909 1000uF/35V
C910 1000uF/35V
R848 5R6
R849 5R6
C911 100nF
C912 100nF
C913 220nF
C914 220nF
C915 47uF/63V
C916 47uF/63V
GND
VDD
(+27V)
GND
(-27V)
VSS
CN810A
CON4
C905 1nF
C906 1nF
BOSE
FRAMINGHAM, MA 01701-9168
PS1 Power Stand
Digital Amplifier PCB, Rev. G
120V Version 1.0 Systems
P/N: 273729
Sheet 4 of 4

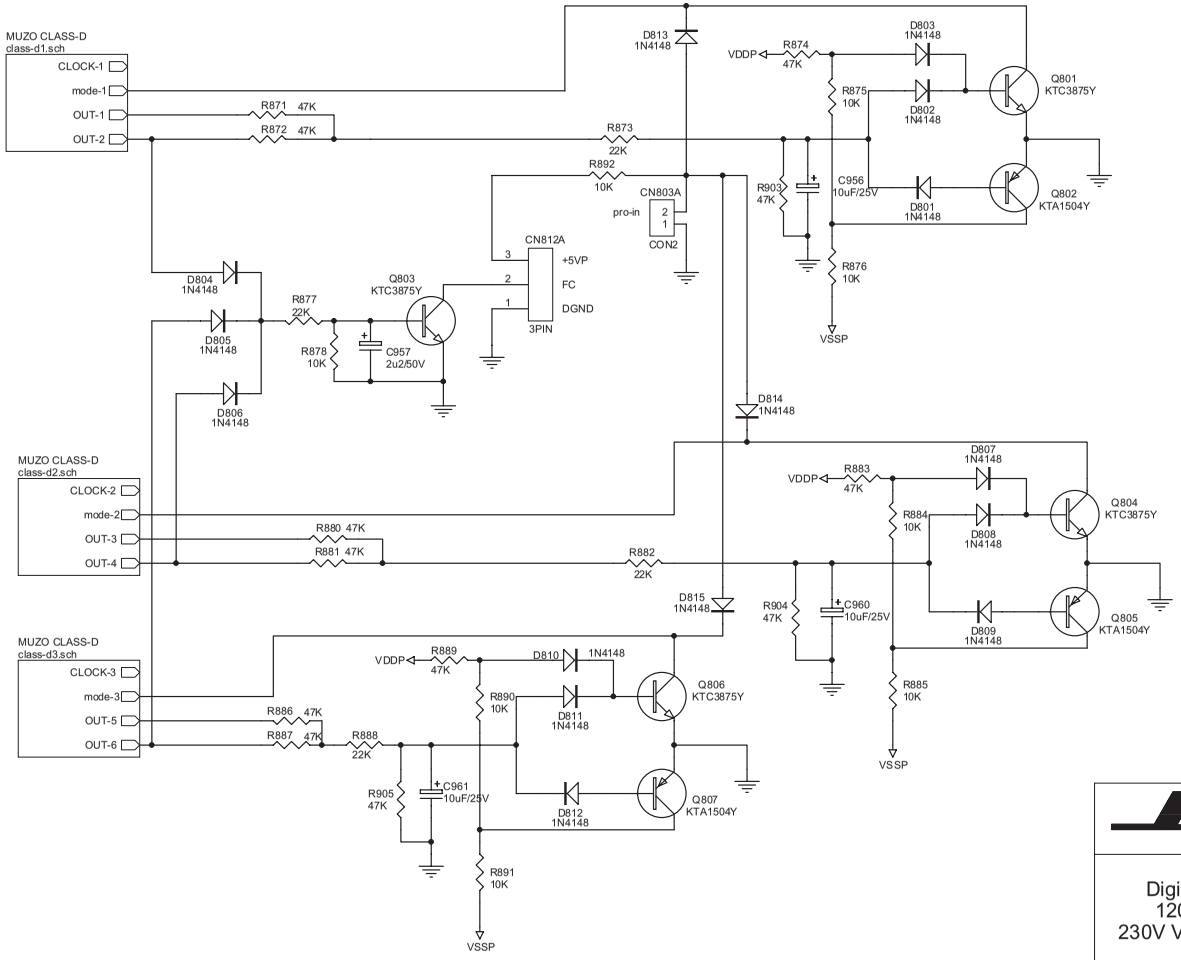

BOSE

FRAMINGHAM, MA 01701-9168

PS1 Power Stand
Digital Amplifier PCB, Rev. J
120V Version 1.1 Systems
230V Version 1.0 and 1.1 Systems
P/N: 283363
Sheet 1 of 4

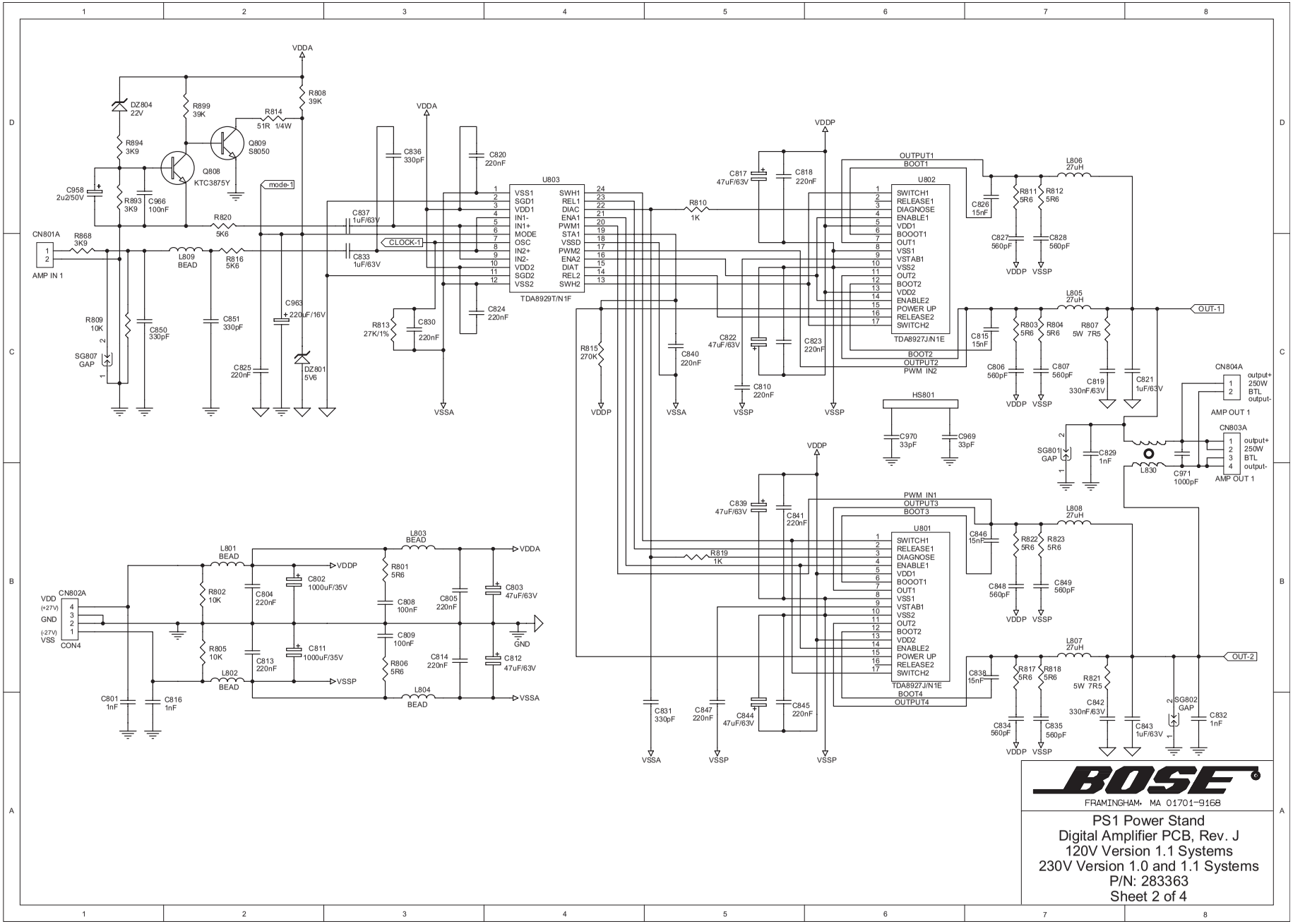

BOSE
FRAMINGHAM, MA 01701-9168

PS1 Power Stand
Digital Amplifier PCB, Rev. J
120V Version 1.1 Systems
230V Version 1.0 and 1.1 Systems
P/N: 283363
Sheet 2 of 4

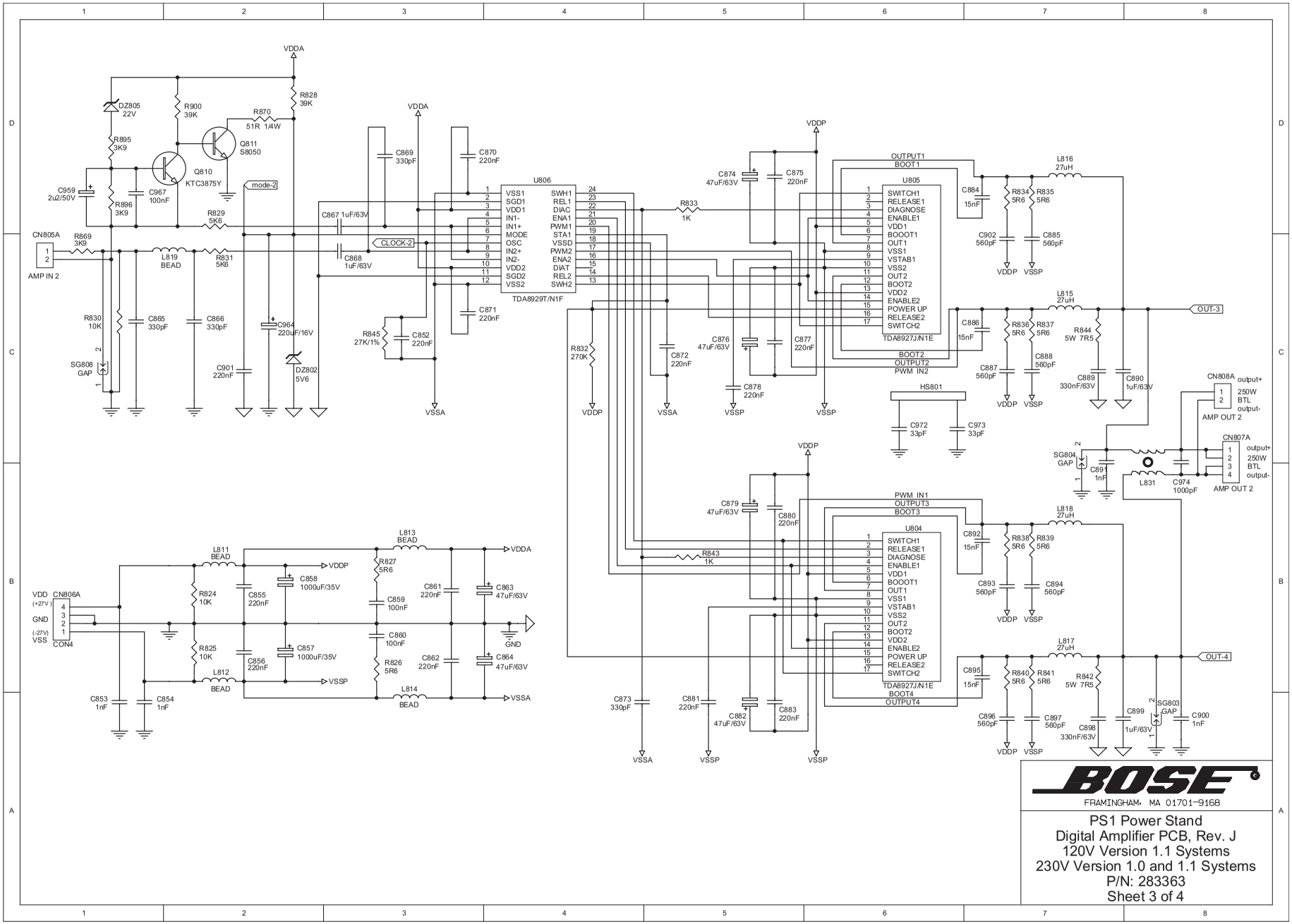

BOSE
FRAMINGHAM, MA 01701-9168

PS1 Power Stand
Digital Amplifier PCB, Rev. J
120V Version 1.1 Systems
230V Version 1.0 and 1.1 Systems
P/N: 283363
Sheet 3 of 4

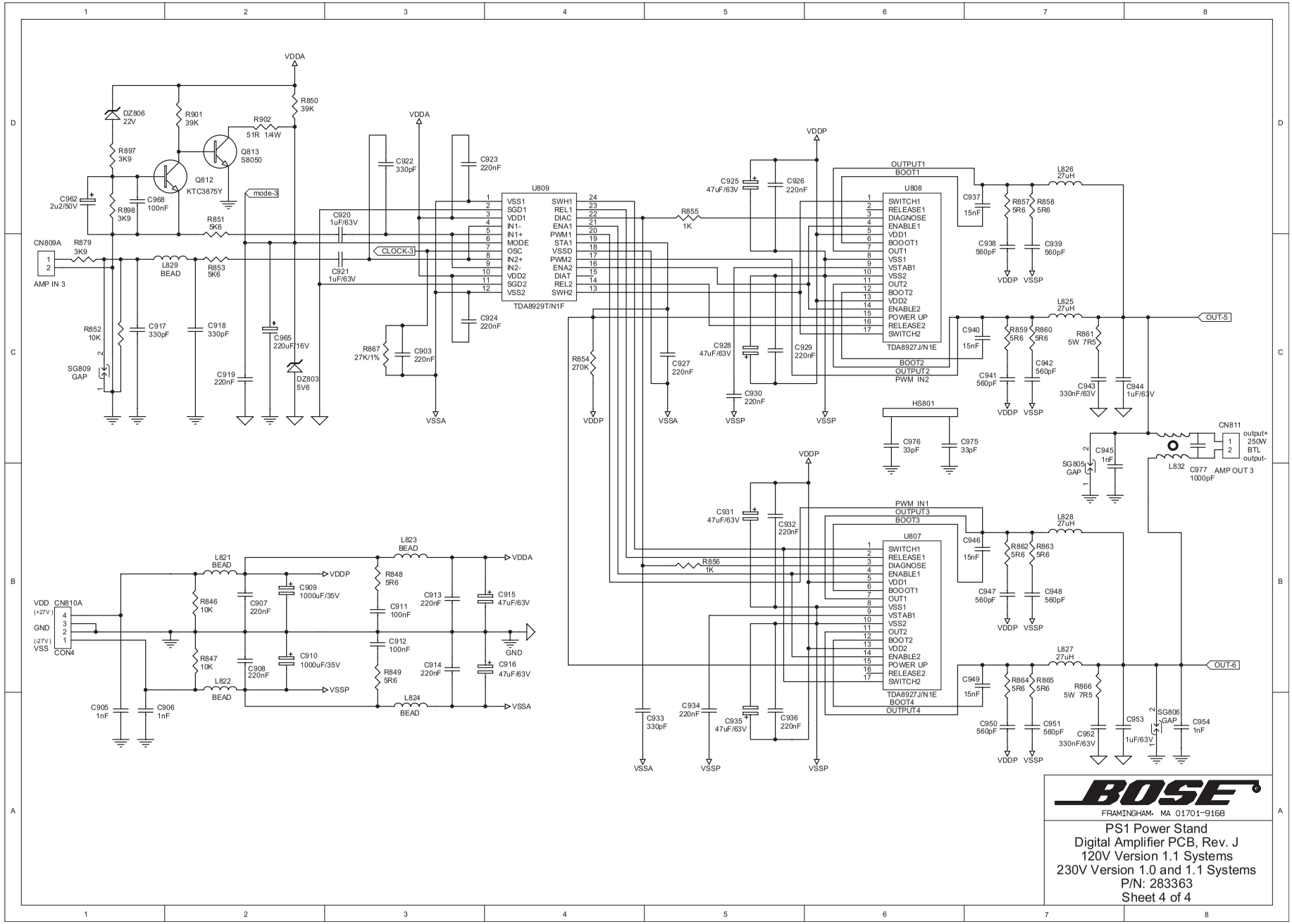

BOSE
FRAMINGHAM, MA 01701-9168

PS1 Power Stand
Digital Amplifier PCB, Rev. J
120V Version 1.1 Systems
230V Version 1.0 and 1.1 Systems
P/N: 283363
Sheet 4 of 4

INPUT				CHANNEL
INH	C	B	A	
0	0	0	0	X0
0	0	0	1	X1
0	0	1	0	X2
0	0	1	1	X3
0	1	0	0	X4
0	1	0	1	X5
0	1	1	0	X6
0	1	1	1	X7
1	*	*	*	NONE

*Don't Care condition.

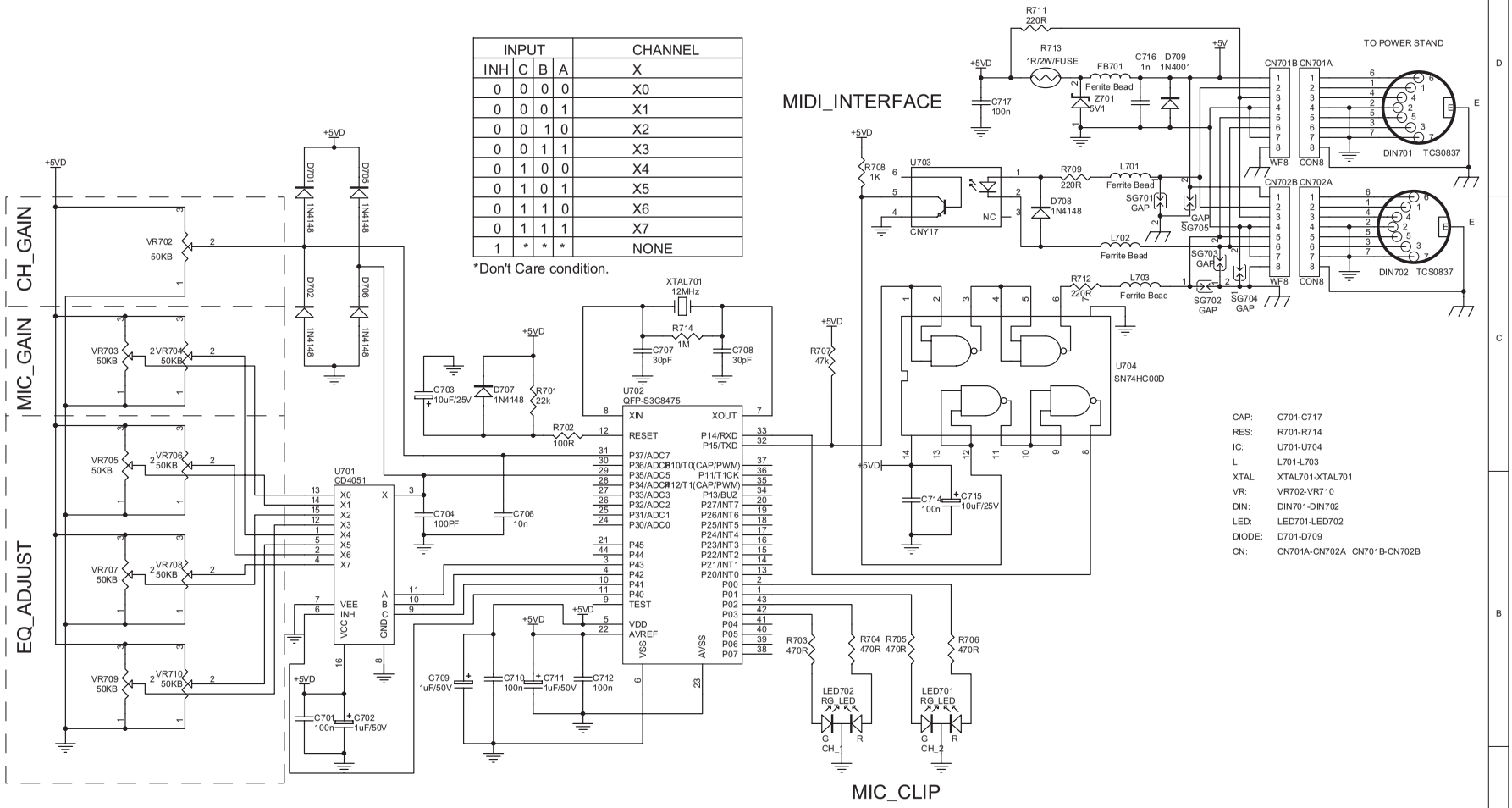

BOSE
FRAMINGHAM, MA 01701-9168

PS1 Power Stand
Remote Control PCB, Rev. G
120V Version 1.0 and 1.1 Systems
230V Version 1.0 and 1.1 Systems
P/N: 273829
Sheet 1 of 1

Appendix

PS1 Power Stand Test Cables

Note: In order to be able to properly test the PS1 Power Stand, you will need to make up a few test cables.

1. Amplifier Output Test Cable:

Parts needed:
1- Neutrik NL4FX Speakon X-Line/4 Pole connector.
4 - Dual banana jacks
2 - 10k ohm, 1/4 Watt resistors
16 or 18 AWG twisted pair wire, 6 feet
18 AWG twisted pair wire, 2 feet

This cable is used to connect the Amp 1 OUT, Amp 2 OUT or Bass/Amp3 OUT jacks to the load resistors used in the test procedures. The connector used is a Neutrik NL4FX Speakon X-Line / 4 Pole type. This connector has 4 terminals labeled 1+, 1-, 2+ and 2-. Terminals 1+ and 1- are used to connect to the load resistors. Use 18 or 16 AWG wire for these terminals. Use twisted pair wires to avoid inducing noise into the cable during use.

The 2+ and 2- terminals will be used to sense the loads connected to the Speakon connector when used with the Bass/Amp3 OUT jack. This jack automatically senses the load on this jack to properly tailor the EQ and output level for the connection of one or two bass modules. It does this by sensing the resistive value across terminals 2+ and 2-. The bass modules have a 10k ohm resistor across these terminals. When only one bass module is connected, the PS1 sees the 10k resistance and sets the EQ and output level accordingly. When two bass modules are connected, it sees 5k and sets the EQ and output level accordingly. For the test cable, you will use 18 AWG twisted pair wire to a dual banana jack.

It is also useful to have 3 spare banana jacks, one with a short across it and 2 with a 10k Ohm, 1/4 Watt resistor each to simulate a bass module connected to the terminals. The Amp 1 OUT and Amp 2 OUT jacks to not sense this load.

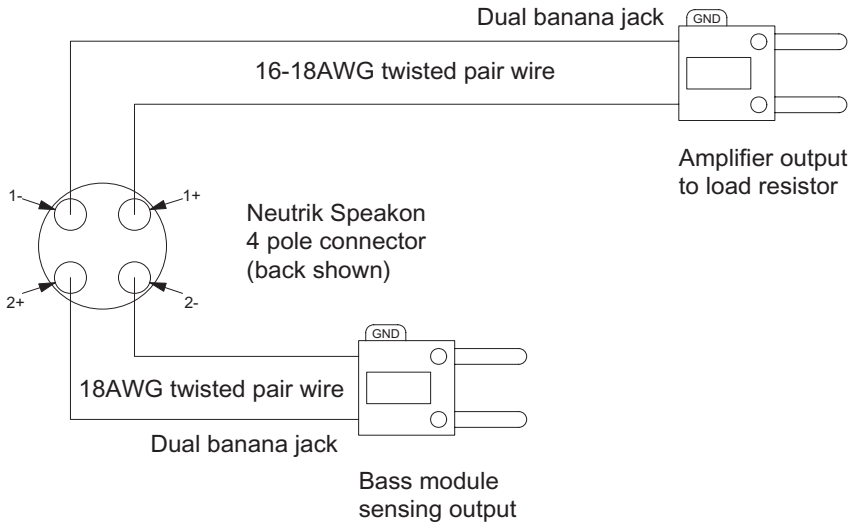

Figure 11. Amplifier Output Test Cable Wiring Diagram

Appendix

PS1 Power Stand Test Cables (continued)

2. XLR Microphone Input Test Cable

Parts needed:
1 - XLR male connector
1 - Dual banana jack
18 AWG shielded twisted pair wire, 6 feet

This cable is used to test the channel 1 and 2 microphone inputs on the PS1 Power Stand. These input jacks are dual purpose jacks that will accept either XLR or 1/4” TRS phono jack balanced inputs.

Connect the dual banana jack’s positive (+) connection to pin 2 of the XLR jack. Connect the dual banana jack negative (-) connection to pin 3 of the XLR jack. Connect the cable shield to pin 1 of the XLR jack.

3. Line Input 1/4” Phono Jack Test Cable

Parts needed:
1 - Mono 1/4” phono jack
1 - Dual banana jack
18 AWG shielded twisted pair wire, 6 feet
This cable is used to test the channel 1 and 2 line inputs on the PS1 Power Stand.

Connect the dual banana jack’s positive (+) connection to the tip connection of the 1/4” phono jack. Connect the dual banana jack negative (-) connection to the ring connection of the 1/4” phono jack.

4. Insert Jack Test Cable

This cable is used to test the channel 1 and 2 insert jacks on the PS1 Power Stand. When you plug it into the channel 1 or channel 2 insert jack, you will be able to separate the sections of the electronics. Refer to the PS1 Power Stand block diagram on page 78. The RETURN dual banana jack will give you the output of the circuitry up to the output of the 2 channel digital volume control. The SEND dual banana jack will allow you to input a signal to test the circuitry after the insert jack, which is the input to the A/D converter and DSP.

Parts needed:
1 - Tip/Ring/Sleeve (stereo) 1/4” phono jack
2 - Dual banana jacks
Shielded stereo cable, 6 feet

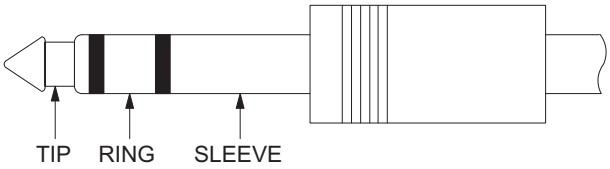

For each of the shielded stereo pairs of wires, connect the dual banana jack’s positive (+) connection to the center conductor. Connect the dual banana jack’s negative (-) connection to the shield wires. Use an Ohmmeter to determine which of the center conductors is connected to the ring of the 1/4 inch TRS phono jack. Using a permanent black magic marker, label this dual banana connector SEND. Determine which of the center conductors is connected to the tip of the 1/4 inch TRS phono jack. Label this dual banana connector RETURN. The sleeve portion of the jack is the common ground where the shields are connected.

Appendix

5. L1 Line Array Test Cables

These two cables will allow you to test the upper and lower line array sections without a PS1 power stand. Use these cables for the line array test procedures in this service manual.

Lower Line Array Section Test Cable

Parts needed:
1 - 10 pin Molex male connector, Molex part number 39-00-0039 (F)
4 - Molex crimp-on pins for above connector, Molex part number 39-00-0039
1 - dual banana jack
12 feet of 16 or 18AWG twisted pair wire

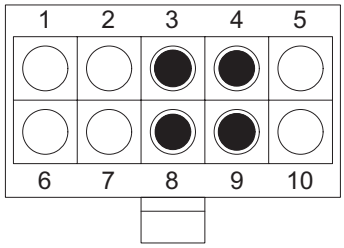

Molex Connector Rear View

Cut the 12 foot length of twisted pair wire in half. Strip all of the wires back about 1/4 inch. Crimp the molex pins onto the wires. The positive (+) side of the twisted pair wires will go into pins 3 and 8 of the Molex connector. The negative (-) side of the twisted pair wires will go into pins 4 and 9 of the Molex connector. Connect the wires that go to pins 3 and 8 of the Molex connector to the positive (+) side of the dual banana jack. Connect the wires that go to pins 4 and 9 of the Molex connector to the negative (-) side of the dual banana jack.

Upper Line Array Section Test Cable

Parts needed:
1 - 4 pin Molex male connector, Molex part number 39-01-2041
4 - Molex crimp-on pins for above connector, Molex part number 39-00-0041 (M)
1 - dual banana jack
12 feet of 16 or 18AWG twisted pair wire

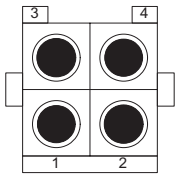

Molex Connector Rear View

Cut the 12 foot length of twisted pair wire in half. Strip all of the wires back about 1/4 inch. Crimp the molex pins onto the wires. The positive (+) side of the twisted pair wires will go into pins 2 and 4 of the Molex connector. The negative (-) side of the twisted pair wires will go into pins 1 and 3 of the Molex connector. Connect the wires that go to pins 2 and 4 of the Molex connector to the positive (+) side of the dual banana jack. Connect the wires that go to pins 1 and 3 of the Molex connector to the negative (-) side of the dual banana jack.

6. Bass Module Test Cable

Parts needed:
1 - Neutrik Speakon NL4FX connector
1 - dual banana jack
6 feet of 16 or 18AWG twisted pair wire

Strip all of the wires back about 1/4 inch. Connect the dual banana jack's positive (+) connection to the 1+ connection of the Speakon connector. Connect the dual banana jack negative (-) connection to the 1- connection of the Speakon connector.

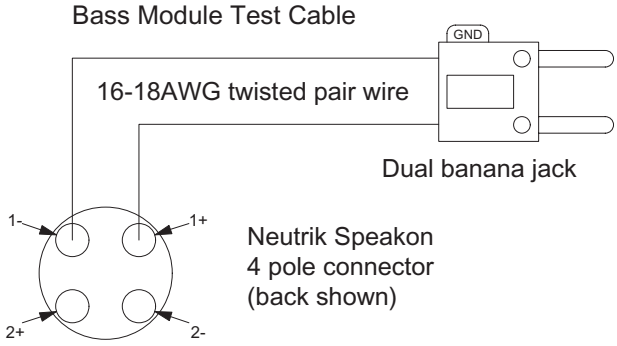

Appendix

PS1 Power Stand Software Update Procedure

Required Equipment:

1- CD player with a S/PDIF digital output (do not use a Bose® Lifestyle® media center)
1- PS1 Power Stand update CD (see the instructions for creating this disc below)
1- S/PDIF video cable, part number 183200, or an audio cable with RCA connectors
1- PS1 Power Stand AC line cord, part number 273790

PS1 Power Stand Update CD Procedure:

- Go to the Bose Technical Service web page at http://intranet.bose.com/tsg (Bose internal repair centers) or http:serviceops.bose.com (external Bose affiliated repair centers).
- Navigate to the Personal Amplification System web page. The link to it is located on the Pro Products web page.
- Scroll down the page until you see the table that the link to the PS1 Power Stand software update is located in. Download the file to your computer's desktop.
- Using a CD burner and your CD burner software, burn the file onto a blank CD-R or CD-RW disc. Once this disc is successfully created, label the disc with the revision of the software.

Update Procedure:

- Plug the CD player into an AC mains outlet.
- Connect the S/PDIF cable to the Audio Outputs/Digital jack on the back of the CD player.
- Connect the other end of the S/PDIF cable to the DATA IN jack on the PS1 Power Stand's input panel. This jack is located in the middle of the panel. It's an RCA jack with a white center.
- Connect the PS1 Power Stand's AC line cord to the AC mains jack on the PS1 input panel. This jack is located on the right side next to the power switch.
- Connect the other end of the AC line cord to an AC mains outlet.
- Power up the PS1 Power Stand by moving the power switch to the ON position. Wait for the power LED to light steady green.
- Load the update CD into the CD player. Press the PLAY CD/DVD button on the remote control. The update process should begin.
- Wait about 5 seconds while the disc is playing. The green power LED on the PS1 Power Stand should blink rapidly, about 10 times per second. After about 10 seconds, the LED should begin to blink slower, about twice a second.
- The update process is complete. Power down the PS1 Power Stand. Disconnect the S/PDIF cable from the DATA IN jack.
- Verify proper operation of the PS1 Power Stand using the test procedures in this service manual before returning the unit to the customer.

Troubleshooting:

Problems with this update procedure are indicated by the PS1 Power Stand's power LED. Typical indicators are:

- LED stays a steady green.
- LED blinks slowly red

In either case, simply repeat the process above. Make sure you wait 5 seconds after power up of the PS1 Power Stand before playing the update disc. Ensure all of the cables are properly connected.

Service Manual Revision History

Date	Revision Level	Description of Change	Change Driven By	Pages Affected
2/04	00	Document released at revision 00.	Service manual release	All
4/05	01	Added information for non-US versions	Non-US product release	Various

Better sound through research®

Personalized Amplification System™

PS1 Power Stand, R1 Remote Control, L1 Line Array and B1 Bass Module

US/Canada, European, UK and Australian Versions 1.0 and 1.1

©2005 Bose Corporation

Service Manual

Reference Number 264018-SM Rev. 01
Electronic Copy Only

SPECIFICATIONS AND FEATURES SUBJECT TO CHANGE WITHOUT NOTICE

Bose Corporation
The Mountain
Framingham Massachusetts USA 01701

P/N: 264018-SM Rev. 01 5/2005 (P)
http://serviceops.bose.com