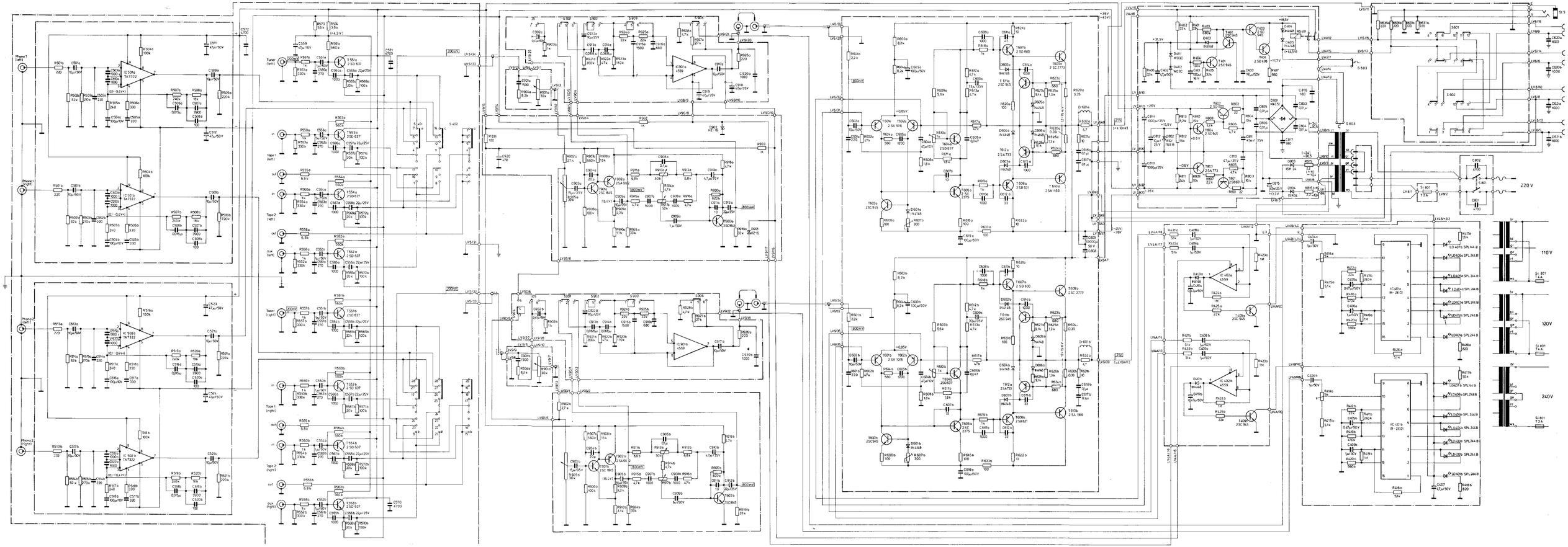
Phono 1 (left)
Phono 1 (right)
Phono 2 (left)
Phono 2 (right)
Tuner (left)
Tape 1 (left)
Tape 2 (left)
Tape 1 (right)
Tape 2 (right)
Tuner (right)
IC 501a TA7322
IC 501b TA7322
IC 502a TA7322
IC 502b TA7322
IC 401a LM359
IC 401b LM359
IC 402a LM359
IC 402b LM359
IC 401c IR-2E01
IC 401d IR-2E01
220 V
110 V
120 V
240 V