BROOK
MODEL 7

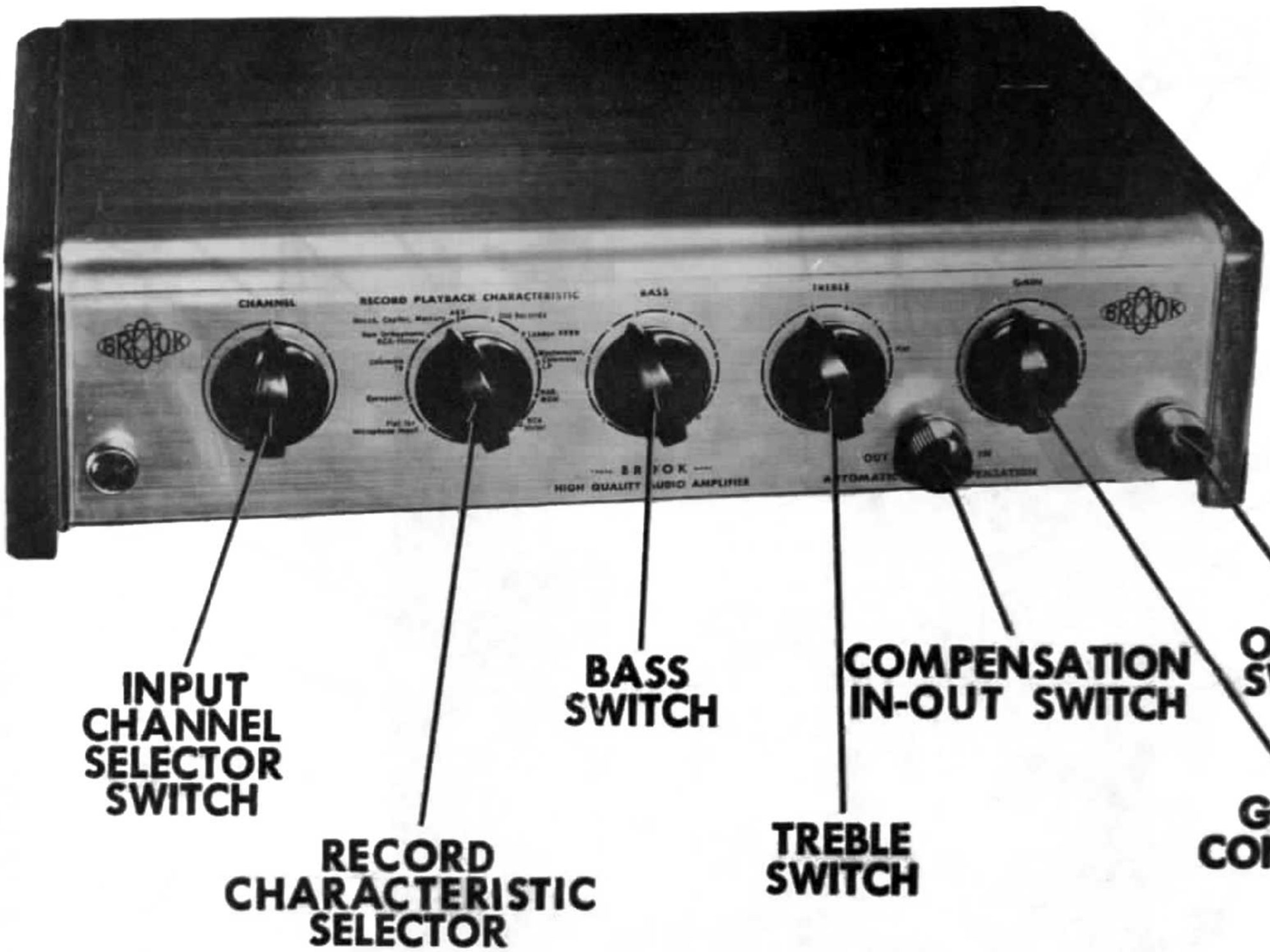

TRADE NAME	Brook Model 7
MANUFACTURER	Brook Electronics, Inc., 34 DeHart Place, Elizabeth 2, N.J.
TYPE SET	AC Operated 5 Channel Audio Pre-Amplifier
TUBES (Five)	Types 6J7 Pre-Amp., 6SJ7 Pre-Amp., 6SJ7 AF Amp., (2) 6C4 AF Amp., 6X4 Rectifier
POWER SUPPLY	110-120 Volts AC-60 Cycles RATING .21 Amp. @ 117 Volts AC

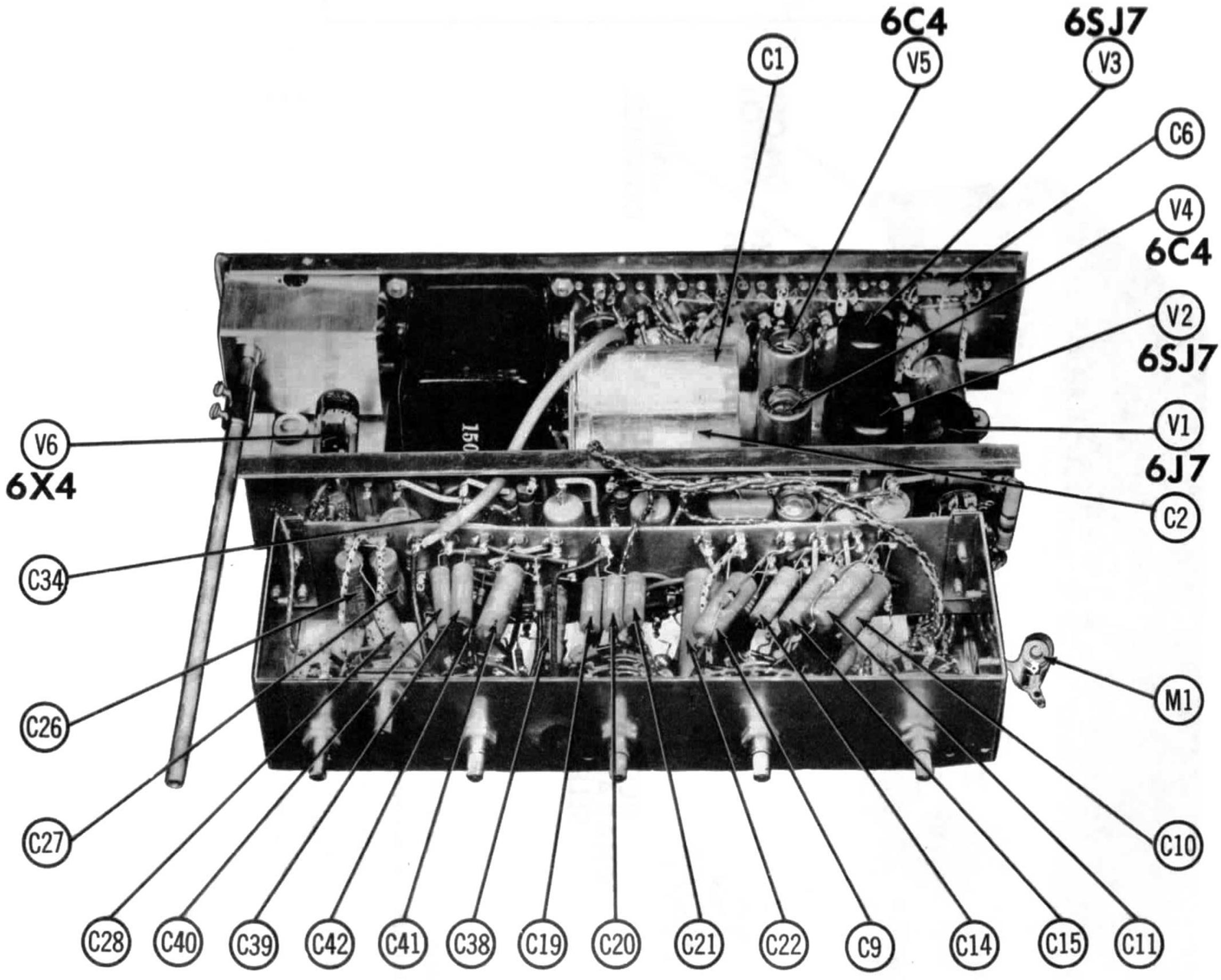

CHASSIS TOP VIEW-CAPACITOR IDENTIFICATION

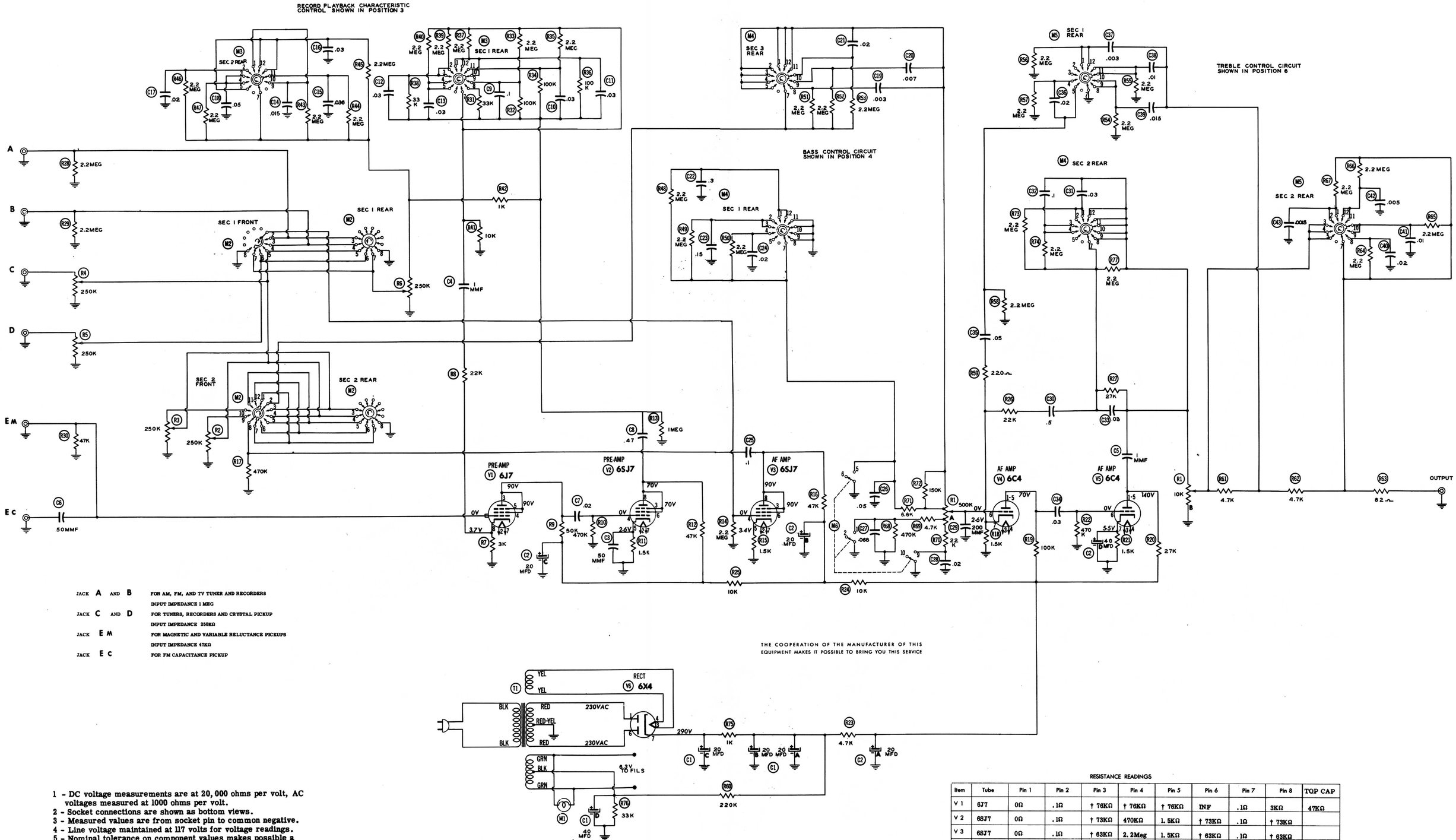

JACK A AND B — FOR AM, FM, AND TV TUNER AND RECORDERS
INPUT IMPEDANCE 1 MEG

JACK C AND D — FOR TUNERS, RECORDERS AND CRYSTAL PICKUP
INPUT IMPEDANCE 250KΩ

JACK E M — FOR MAGNETIC AND VARIABLE RELUCTANCE PICKUPS
INPUT IMPEDANCE 47KΩ

JACK E C — FOR FM CAPACITANCE PICKUP

1 - DC voltage measurements are at 20,000 ohms per volt, AC voltages measured at 1000 ohms per volt.
2 - Socket connections are shown as bottom views.
3 - Measured values are from socket pin to common negative.
4 - Line voltage maintained at 117 volts for voltage readings.
5 - Nominal tolerance on component values makes possible a variation of ± 15% in voltage and resistance readings.
6 - All controls at minimum, proper output load connected.

RESISTANCE READINGS

Item	Tube	Pin 1	Pin 2	Pin 3	Pin 4	Pin 5	Pin 6	Pin 7	Pin 8	TOP CAP
V 1	6J7	0Ω	.1Ω	† 76KΩ	† 76KΩ	† 76KΩ	INF	.1Ω	3KΩ	47KΩ
V 2	6SJ7	0Ω	.1Ω	† 73KΩ	470KΩ	1.5KΩ	† 73KΩ	.1Ω	† 73KΩ	
V 3	6SJ7	0Ω	.1Ω	† 63KΩ	2.2Meg	1.5KΩ	† 63KΩ	.1Ω	† 63KΩ	
V 4	6C4	† 105KΩ	INF	.1Ω	.1Ω	† 105KΩ	200KΩ	1.5KΩ		
V 5	6C4	† 32KΩ	INF	.1Ω	.1Ω	† 32KΩ	470KΩ	1.5KΩ		
V 6	6X4	450Ω	INF	INF	INF	INF	460Ω	100KΩ		

† MEASURED FROM PIN 7 OF V6.

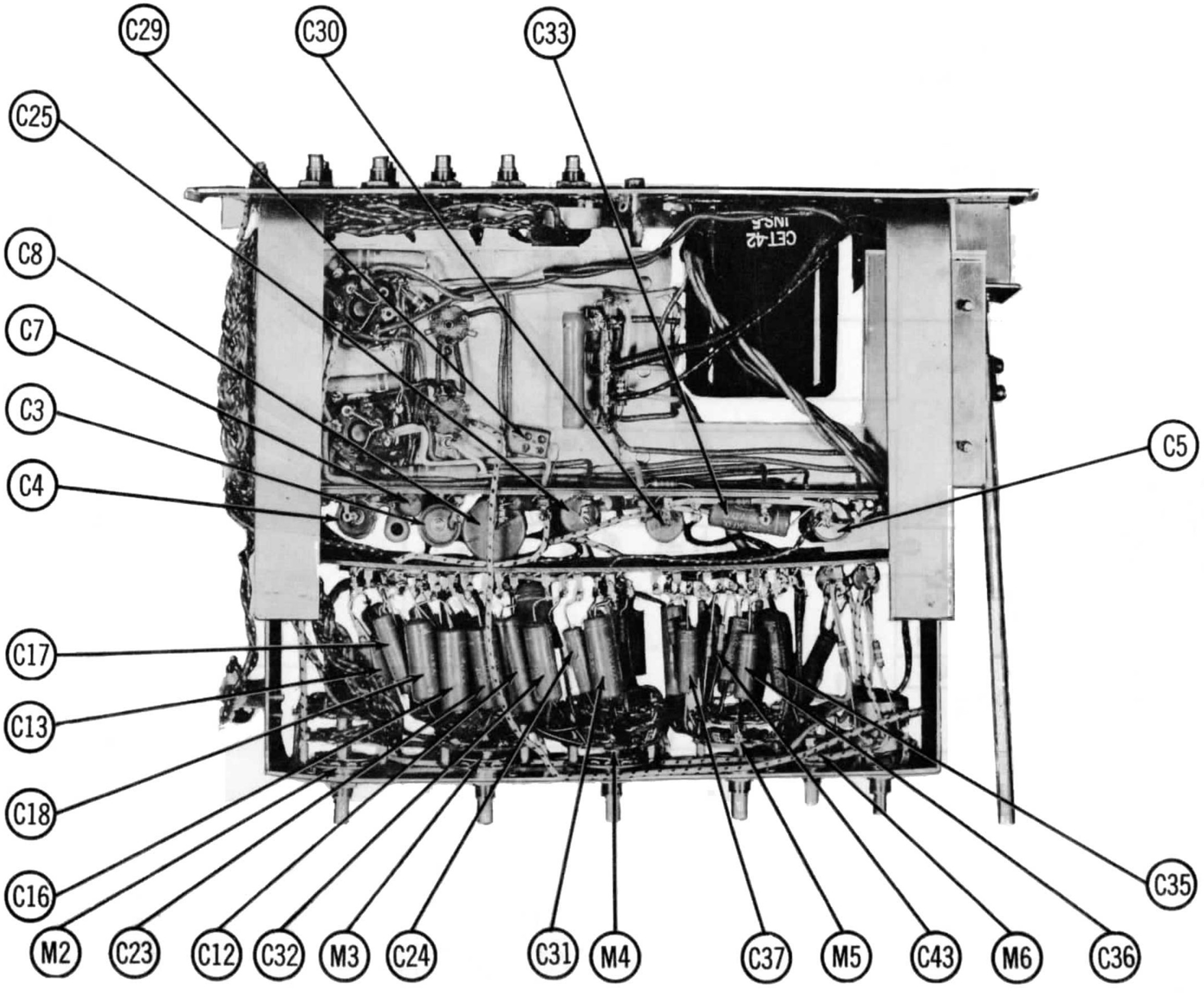

CHASSIS BOTTOM VIEW-CAPACITOR IDENTIFICATION

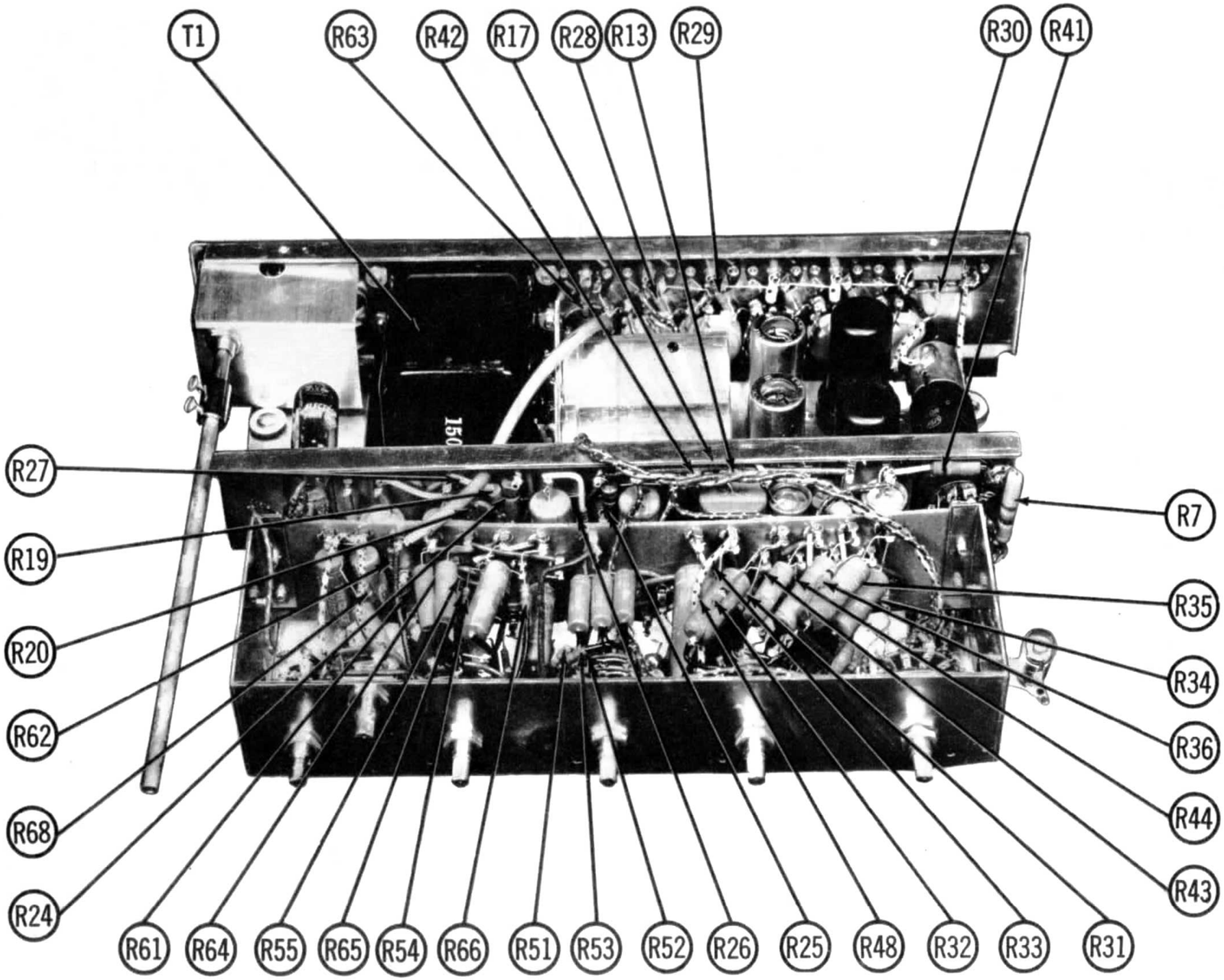

CHASSIS TOP VIEW-RESISTOR IDENTIFICATION

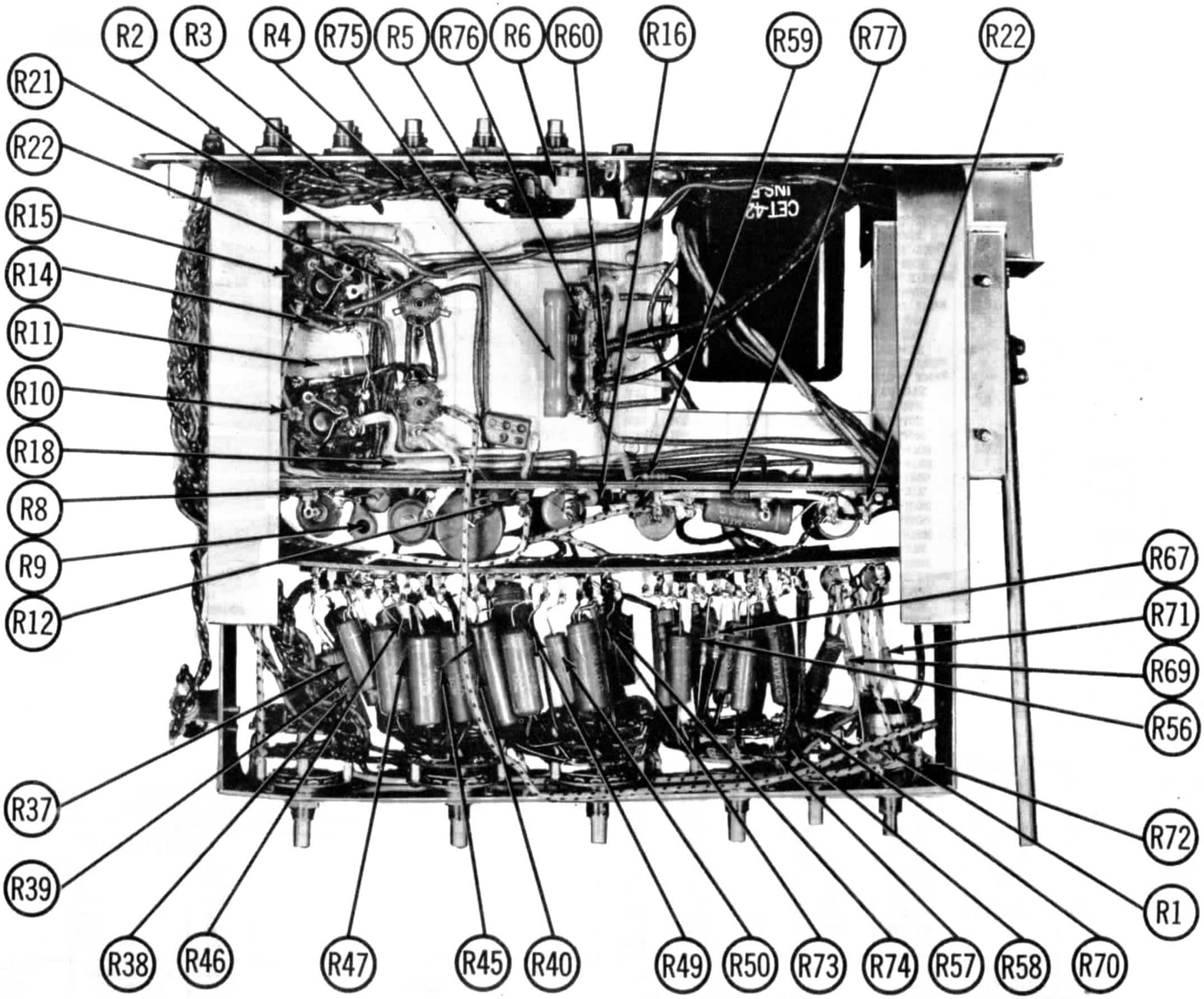

CHASSIS BOTTOM VIEW-RESISTOR IDENTIFICATION

PARTS LIST AND DESCRIPTIONS

TUBES (SYLVANIA, GENERAL ELECTRIC or Equivalent)

ITEM No.	USE	REPLACEMENT DATA: BROOK PART No.	REPLACEMENT DATA: STANDARD REPLACEMENT	RTMA BASE TYPE	NOTES
V1	Pre. Amplifier	6J7	6J7	7R	
V2	Pre. Amplifier	6SJ7	6SJ7	8N	
V3	AF Amplifier	6SJ7	6SJ7	8N	
V4	AF Amplifier	6C4	6C4	6BG	
V5	AF Amplifier	6C4	6C4	6BG	
V6	Rectifier	6X4	6X4	5BS	

CAPACITORS

ITEM No.	RATING: CAP.	RATING: VOLT	BROOK PART No.	AEROVOX PART No.	CENTRALAB PART No.	CORNELL-DUBILIER PART No.	ERIE PART No.	MALLORY PART No.	SPRAGUE PART No.	NOTES
C1A	20	475								
B	20	475								
C	20	475								
D	40	50								
C2A	20	475								
B	20	475								
C	20	475								
C2D	40	50								
C3	50	50		PRS50/50				TC39	TVA-1308	
C4	1	450		PRS450/4					R1260	
C5	1	450		PRS450/4					R1260	
C6	50	500		1469-00005		5R5Q5		MCB225	MS-45	
C7	.02	600								
C8	.47	600								
C9	.1	200								
C10	.03	600								
C11	.03	600								
C12	.03	600								
C13	.03	600								Note 1
C14	.015	200								
C15	.036	200								
C16	.03	600								
C17	.02	200								
C18	.05	400								
C19	.003	200								
C20	.007	200								
C21	.02	200								
C22	.3	200								
C23	.15	200								
C24	.02	200								
C25	.1	600								
C26	.05	400								
C27	.068	200								
C28	.02	200								
C29	200	500		1469-0002		5W5T2		MCB237	MS-32	
C30	.5	400								
C31	.03	600								
C32	.1	200								
C33	.03	600								
C34	.03	600								
C35	.05	400								
C36	.02	200								
C37	.003	200								
C38	.01	600								
C39	.015	200								
C40	.02	200								
C41	.01	600								
C42	.005	200								
C43	.0015	200								

Note 1. Some Models use an .02MFD @ 600V in this application.

TRANSFORMER (POWER)

ITEM No.	RATING: PRI.	RATING: SEC. 1	RATING: SEC. 2	RATING: SEC. 3	BROOK PART No.	STANCOR PART No.	MERIT PART No.	CHICAGO PART No.	TRIAD PART No.
T1	117VAC @ .21A	460VCT .014ADC	6.3VAC @ .58A	6.3VCT @ 1.38A					

PARTS LIST AND DESCRIPTIONS (Continued)

CONTROLS

ITEM No.	RATING: RESISTANCE	RATING: WATTS	BROOK PART No.	IRC PART No.	CLAROSTAT PART No.	CENTRALAB PART No.	MALLORY PART No.	INSTALLATION NOTES
R1A	500KΩ	½	6271739	Q18-133X				Volume tapped at 100K and 200K
B	10KΩ	½	Not Req.	M11-116				Treble
R2A	250K	½	6151505	Q13-130	AG-60-Z	AB-51	U-44	Low gain Vol. #1
B	Shaft		Not Req.	Not Req.	FKS-1/4	AK-1	Not Req.	Attach to R2A
R3A	250K	½	6151505	Q13-130	AG-60-Z	AB-51	U-44	Low gain Vol. #2
B	Shaft		Not Req.	Not Req.	FKS-1/4	AK-1	Not Req.	Attach to R3A
R4A	250K	½	6151505	Q13-130	AG-60-Z	AB-51	U-44	Low gain Vol. #3
B	Shaft		Not Req.	Not Req.	FKS-1/4	AK-1	Not Req.	Attach to R4A
R5A	250K	½	6151505	Q13-130	AG-60-S	AB-51	U-44	Low gain Vol. #4
B	Shaft		Not Req.	Not Req.	FKS-1/4	AK-1	Not Req.	Attach to R5A
R6A	250K	½	U151505	Q13-130	AG-60-Z	AB-51	U-44	Phono Volume
B	Shaft		Not Req.	Not Req.	FKS-1/4	AK-1	Not Req.	Attach to R6A

RESISTORS

ITEM No.	RATING: OHMS	RATING: WATT	BROOK PART No.	IRC PART No.	NOTES
R7	3000Ω	1			
R8	22K	½		BTS-22K	Note 1
R9	50KΩ	10			
R10	470KΩ	½		BTS-470K	
R11	1500Ω	1		BTA-1500	
R12	47KΩ	1		BTA-47K	
R13	1 Meg	½		BTS-1Meg	
R14	2. 2Meg	½		BTS-2. 2Meg	
R15	1500Ω	1		BTA-1500	
R16	47KΩ	1		BTA-47K	
R17	470KΩ	½		BTS-470K	
R18	1500Ω	1		BTA-1500	
R19	100KΩ	1		BTA-100K	
R20	27KΩ	1		BTA-27K	
R21	1500Ω	1		BTA-1500	
R22	470KΩ	½		BTA-470K	
R23	4700Ω	1		BTA-4700	
R24	10K	1		BTA-10K	
R25	10K	1		BTA-10K	
R26	22KΩ	½		BTS-22K	
R27	27KΩ	1		BTA-27K	
R28	2. 2Meg	½		BTS-2. 2Meg	
R29	2. 2Meg	½		BTS-2. 2Meg	
R30	47KΩ	½		BTS-47K	
R31	33KΩ	½		BTS-33K	
R32	100KΩ	½		BTS-100K	
R33	2. 2Meg	½		BTS-2. 2Meg	
R34	100KΩ	½		BTS-100K	
R35	2. 2Meg	½		BTS-. 2. 2Meg	
R36	100KΩ	½		BTS-100K	Note 2
R37	2. 2Meg	½		BTS-2. 2Meg	
R38	33KΩ	½		BTS-33K	
R39	2. 2Meg	½		BTS-2. 2Meg	
R40	2. 2Meg	½		BTS-2. 2Meg	
R41	10KΩ	1		BTA-10K	Note 4
R42	1000Ω	½		BTS-1000	

ITEM No.	RATING: OHMS	RATING: WATT	BROOK PART No.	IRC PART No.	NOTES
R43	2. 2Meg	½		BTS-2. 2Meg	
R44	2. 2Meg	½		BTS-2. 2Meg	
R45	2. 2Meg	½		BTS-2. 2Meg	
R46	2. 2Meg	½		BTS-2. 2Meg	
R47	2. 2Meg	½		BTS-2. 2Meg	
R48	2. 2Meg	½		BTS-2. 2Meg	
R49	2. 2Meg	½		BTS-2. 2Meg	
R50	2. 2Meg	½		BTS-2. 2Meg	
R51	2. 2Meg	½		BTS-2. 2Meg	
R52	2. 2Meg	½		BTS-2. 2Meg	
R53	2. 2Meg	½		BTS-2. 2Meg	
R54	2. 2Meg	½		BTS-2. 2Meg	
R55	2. 2Meg	½		BTS-2. 2Meg	
R56	2. 2Meg	½		BTS-2. 2Meg	
R57	2. 2Meg	½		BTS-2. 2Meg	
R58	2. 2Meg	½		BTS-2. 2Meg	
R59	220Ω	½		BTS-220	
R60	220KΩ	½		BTS-220K	
R61	4700Ω	½		BTS-4700	
R62	4700Ω	½		BTS-4700	
R63	82Ω	½		BTS-82	
R64	2. 2Meg	½		BTS-2. 2Meg	
R65	2. 2Meg	½		BTS-2. 2Meg	
R66	2. 2Meg	½		BTS-2. 2Meg	
R67	2. 2Meg	½		BTS-2. 2Meg	
R68	470KΩ	½		BTS-470K	
R69	4700Ω	½		BTS-4700	
R70	22KΩ	½		BTS-22K	Note 3
R71	6800Ω	½		BTS-6800	
R72	150KΩ	½		BTS-150K	
R73	2. 2Meg	½		BTS-2. 2Meg	
R74	2. 2Meg	½		BTS-2. 2Meg	
R75	1000Ω	10		1 3/4A 1000	
R76	33KΩ	1		BTA-33K	
R77	2. 2Meg	½		BTS-2. 2Meg	

Note 1. Some models may use a 47KΩ resistor in this application.
Note 2. Some models may use a 150KΩ resistor in this application.
Note 3. Some models may use a 20KΩ resistor in this application.
Note 4. Some models may use a 33KΩ resistor in this application.

MISCELLANEOUS

ITEM No.	PART NAME	BROOK PART No.	NOTES
M1	Dial Light		#51
M2	Switch		Input Selector
M3	Switch		Playback characteristic control
M4	Switch		Bass control
M5	Switch		Treble Control
M6	Switch		Bass Compensation