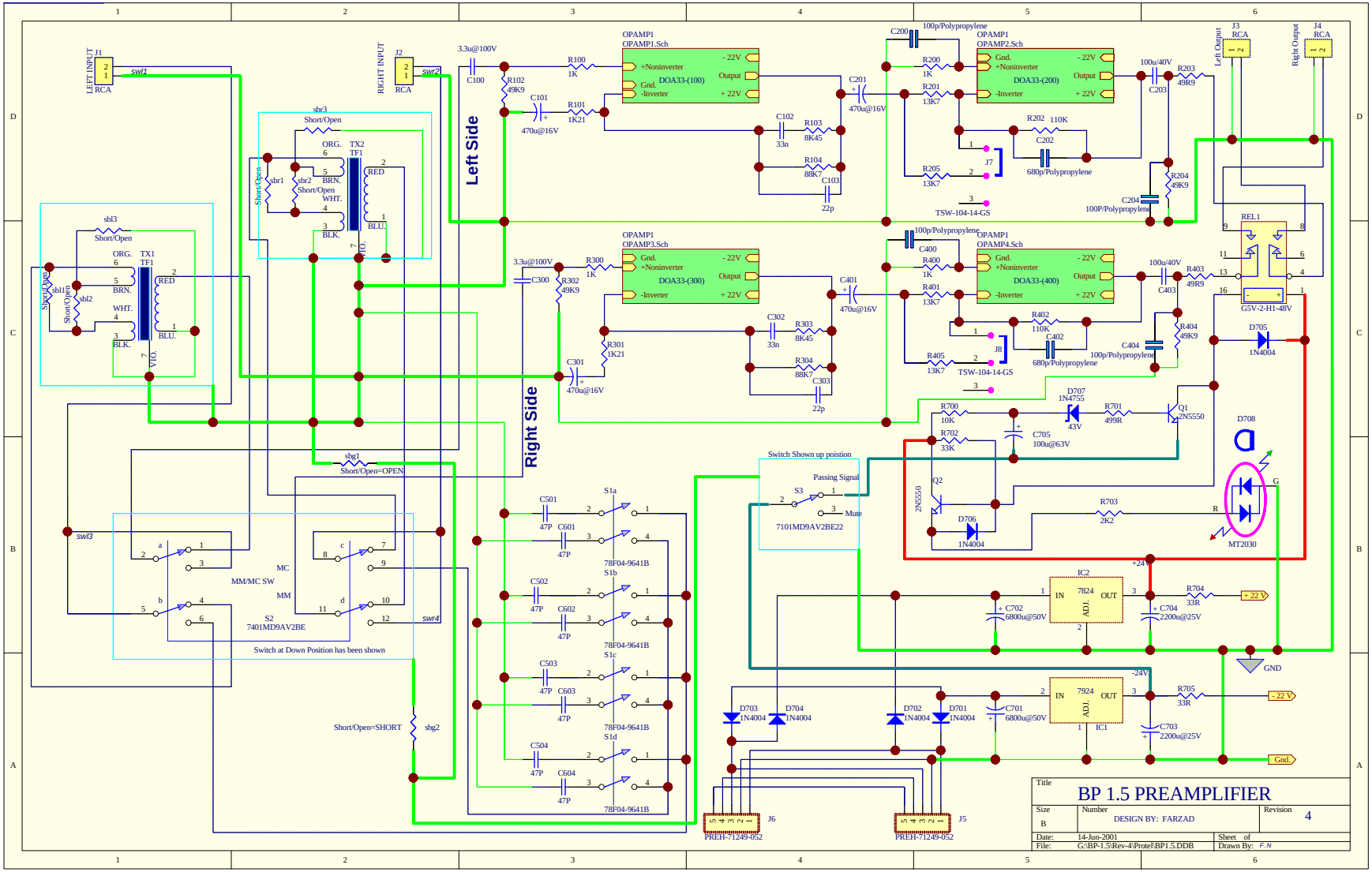
Left Side
Right Side
LEFT INPUT
RIGHT INPUT
J1
J2
RCA
swl1
swr2
swl3
swr4
sbr3
Short/Open
sbl3
sbl1
sbl2
sbr1
sbr2
sbg1
Short/Open=OPEN
sbg2
Short/Open=SHORT
TX1
TF1
TX2
ORG.
BRN.
WHT.
BLK.
RED
BLU.
VIO.
OPAMP1
OPAMP1.Sch
OPAMP2.Sch
OPAMP3.Sch
OPAMP4.Sch
DOA33-(100)
DOA33-(200)
DOA33-(300)
DOA33-(400)
+Noninverter
-Inverter
Gnd.
Output
- 22V
+ 22V
3.3u@100V
470u@16V
100p/Polypropylene
680p/Polypropylene
100P/Polypropylene
TSW-104-14-GS
J7
J8
J3
J4
Left Output
Right Output
REL1
G5V-2-H1-48V
D705
1N4004
D707
1N4755
43V
Q1
2N5550
Q2
D708
MT2030
D706
Switch Shown up poistion
Passing Signal
Mute
S3
7101MD9AV2BE22
MC
MM
MM/MC SW
S2
7401MD9AV2BE
Switch at Down Position has been shown
78F04-9641B
S1a
S1b
S1c
S1d
IC2
7824
IC1
7924
IN
OUT
ADJ.
+24
-24V
+ 22 V
- 22 V
GND
Gnd.
D703
D704
D702
D701
C701
6800u@50V
C702
6800u@50V
C703
2200u@25V
C704
2200u@25V
J6
J5
PREH-71249-052
Title
BP 1.5 PREAMPLIFIER
Size
B
Number
DESIGN BY: FARZAD
Revision
4
Date:
14-Jun-2001
Sheet of
File:
G:\BP-1.5\Rev-4\Protel\BP1.5.DDB
Drawn By:
F.N