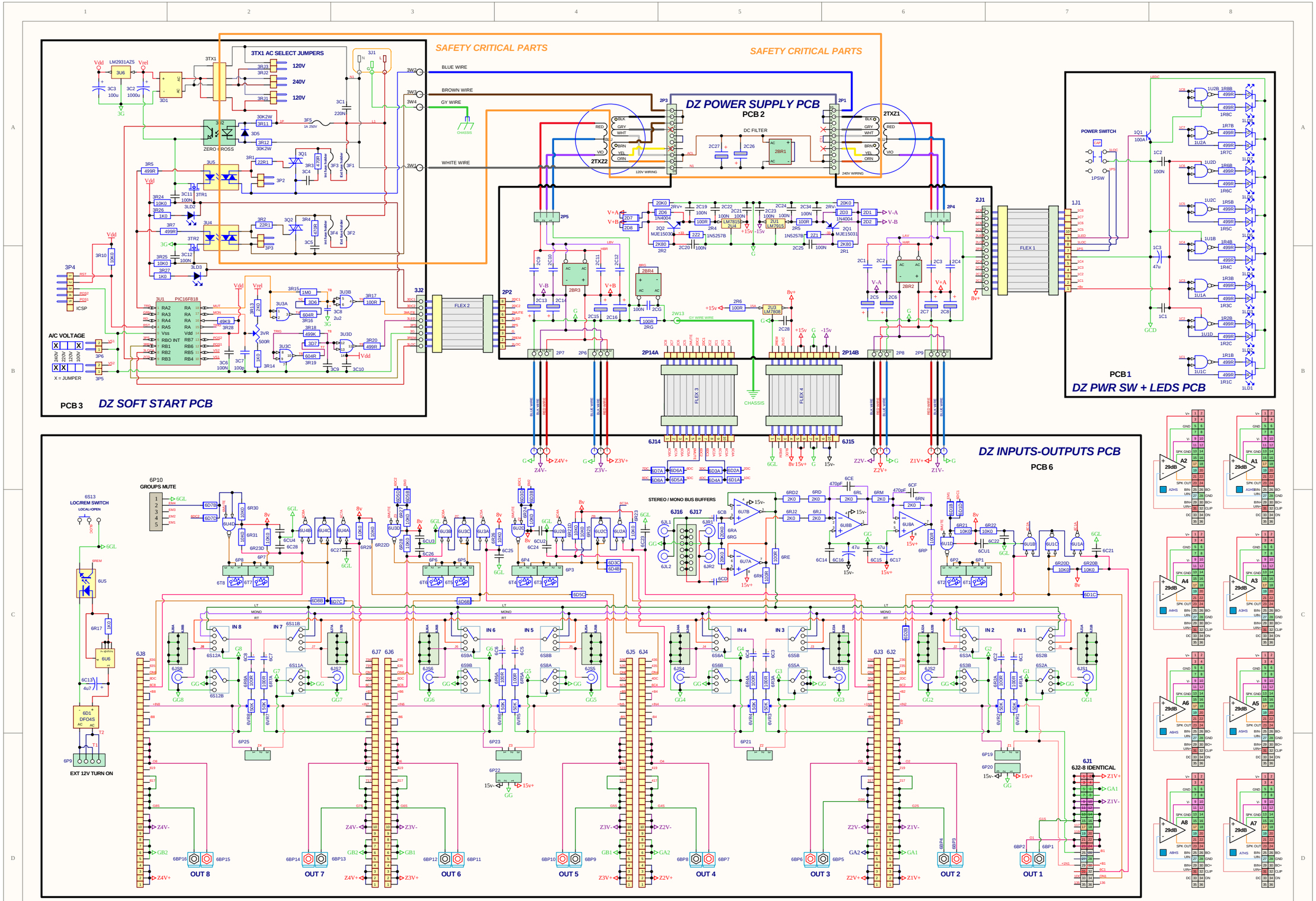

PARTS CHANGES	
PWR TX D250Z TF875-2 PWR TX D130Z TF 7BSST2-6 2C5-8 - 2C13-16 - D130Z - 22,OOOuF 63v 2C5-8 - 2C13-16 - D250Z - 10,000uF 80v	A1-8 AMPLIER MODULES D250Z - HYPEX UcD 400 D130Z - HYPEX UcD 180

BRYSTON
BOX 2170, 677 NEAL DR. PETERBOROUGH, ONTARIO CANADA K9J 7H4
PHONE (705) 742-5325 FAX (705) 742-0882 WWW.BRYSTON.CA

D130Z / 250Z OVERVIEW SCHEMATIC

File : DZ PROJECT SCH R8	Sheet : 1 of	Size : C	
Date : 1004	Drawn : ST	Rev :	