CAMBRIDGE SERVICE

INFORMATION

ISSUE 1 DATE 15 APRIL 1991

AMPLIFIER SERVICE MANUAL

(PRELIMINARY)

MODELS COVERED

A100
C100
A70
C70
P70
P50

CAMBRIDGE AUDIO

P50/P70

INTEGRATED AMPLIFIER

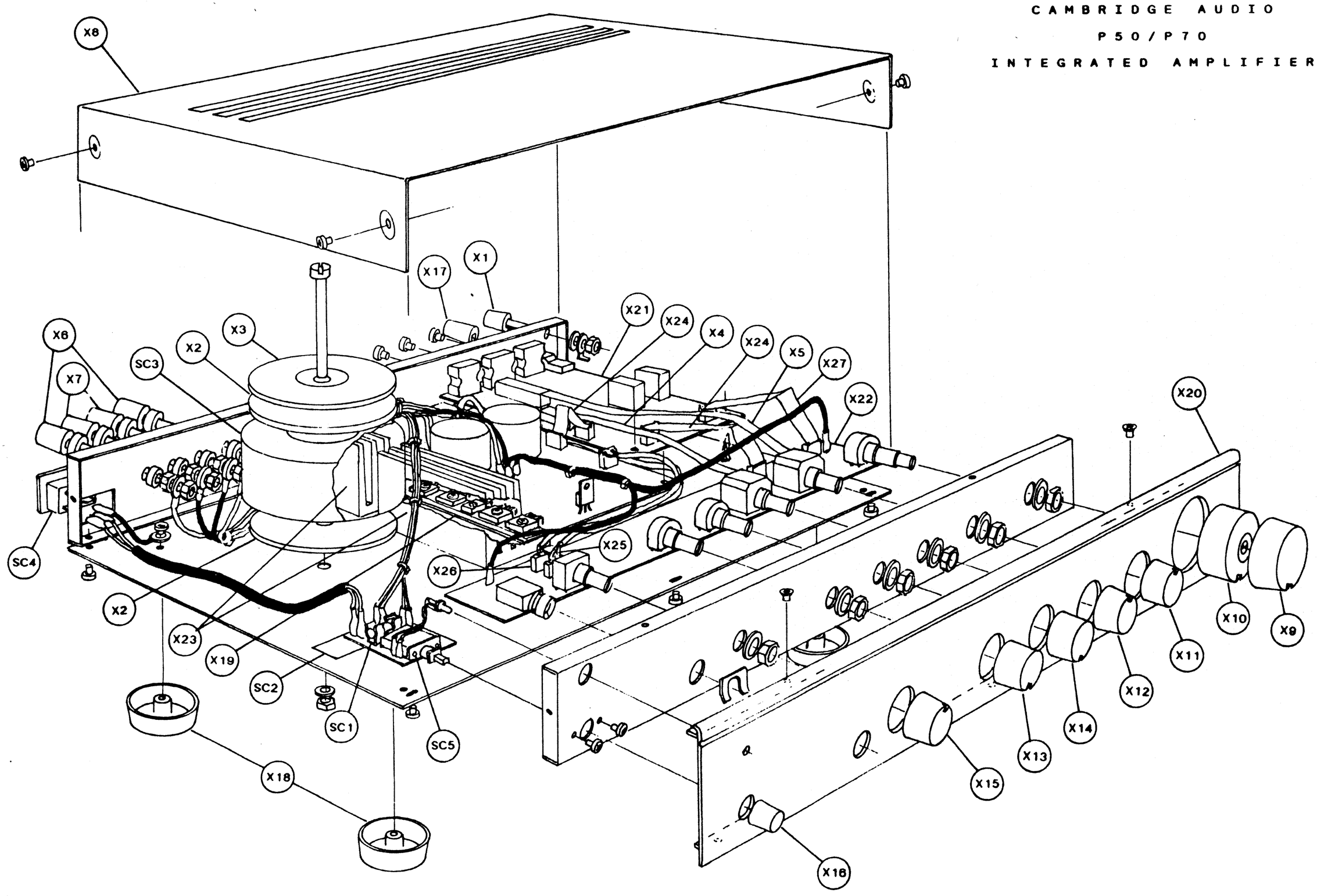

CAMBRIDGE AUDIO

C100 CONTROL AMPLIFIER

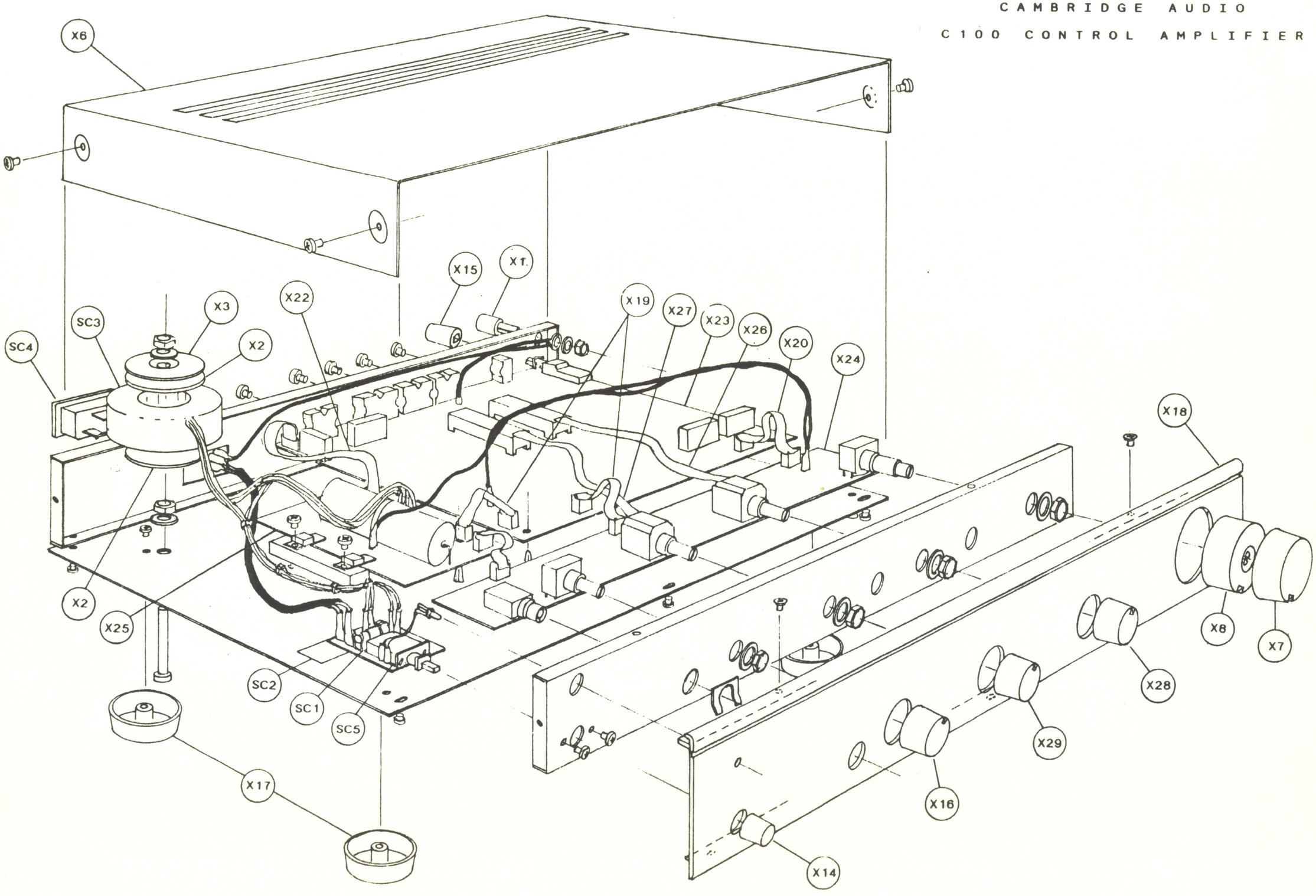

CAMBRIDGE AUDIO

A100 POWER AMPLIFIER

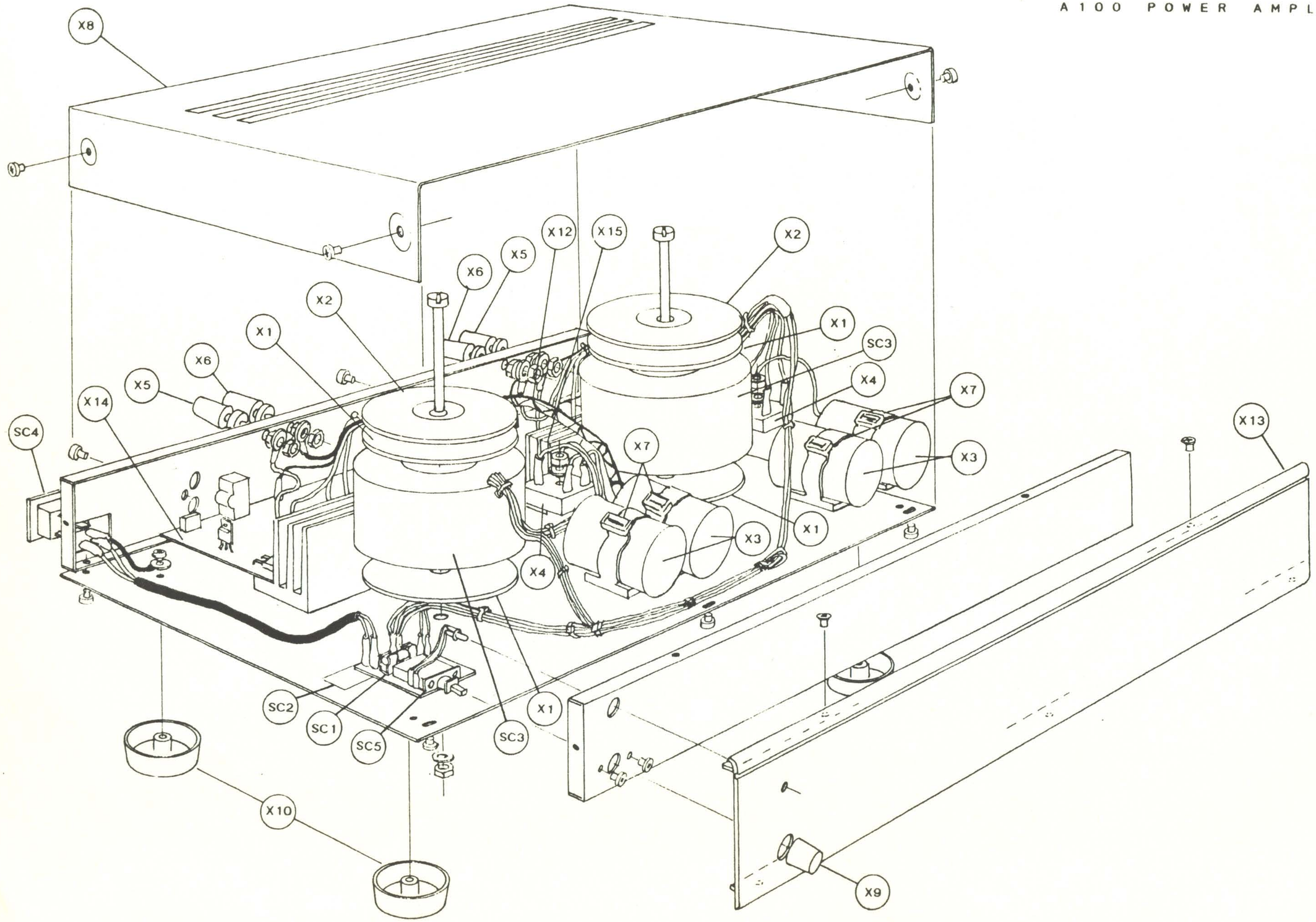

This service manual is intended to assist technicians servicing the Cambridge Audio '89 range of amplifiers as follows- P50, P70, A70, A100, C70, C100.

A set of circuit and block diagrams are provided for reference when servicing. A brief fault-finding guide is also included to assist engineers unfamiliar with this product range.

****CAUTIONS****

BEFORE SERVICE-

All power amplifier stages in Cambridge Audio integrated and Power amplifiers are DC coupled to the loudspeaker terminals. Under NO circumstances should power be applied to a suspect amplifier with loudspeakers connected. Damage will result.

DURING SERVICE-

Service Engineers should exercise due caution when changing fuses. ALWAYS remove the power connector. Remember also that the power supply reservoir capacitors may remain charged when a DC fuse blows.

When checking a faulty circuit board it is advisable to begin by making a careful visual check both for signs of component stress and security of soldered connections on the underside of the PCB.

AFTER SERVICE-

Direct application of mains power to a newly repaired product is not advised. A failed component which remains undetected may cause further damage at switch-on. A split-rail current limited power supply with voltage range 0 to 30V and current capacity 1A is therefore a valuable asset when testing all amplifier circuitry and is strongly recommended. A 'Variac' adjustable mains power transformer will assist testing if a regulated power supply is not available.

ALIGNMENT (POWER AMPLIFIERS)-

The quiescent current of all power amplifier stages must be set following repair work (TEST 3).

ALIGNMENT (PREAMPLIFIERS)-

Mechanical alignment of the power transformer may be necessary when this component has been replaced. After connecting the lead-out cables from the new transformer, assemble the fixing hardware and finger-tighten the clamp nut so that the transformer is still free to rotate. Connect the preamplifier to a monitor system (or headphones) and a turntable with an MC cartridge as source. Switch on the system and preamplifier. Select Phono MC input and advance the volume. With the pickup on the rest, rotate the power transformer to give minimum level of background hum. When the optimum position has been established, switch the power off, apply locking compound to the fixing bolt and tighten securely.

****REMOVAL OF PCB MODULES****

119050 POWER AMP PCB (A100)

Remove the screw securing the phono input socket to the rear panel. Remove the hardware fixing the output transistors to the heatsink (screws or bolts). The PCB may now be lifted clear with the wiring loom in place.

119055 POWER AMP PCB (P50, P70, A70)

Remove the hardware fixing the output transistors to the heatsink (screws or bolts). Remove the connector plugs. The PCB should now unclip at the right edge and rotate upwards with the wiring loom in place.

119057 CONTROL PCB (P50, P70, C70)

Remove screws securing front fascia to the baseplate. Remove or de-solder power LED. Lift front panel clear. Remove screws securing control sub panel to the baseplate. Lift control sub panel to give access to the underside.

119058 EQ SELECT PCB (P50, P70)

Remove the screws securing the phono sockets to the rear panel. Remove the plug in connectors. The PCB should now unclip at the front edge and lift clear.

119061 CONTROL PSU/MUTING PCB (C70, C100)

Remove the hardware fixing the regulators to the heatsink. Remove the connector plugs. Unclip the PCB at the right edge and lift clear.

119063 CONTROL PCB (C100) SEE 119061

119064 MAIN PCB (C70)

Remove the screws securing the rear panel to the baseplate. Disconnect the muting cable from SK*. Unclip the front edge of the PCB from the supports. Protect the top edge of the front panel with a cloth. The PCB will now rotate forwards to lay on the cloth.

119065 MAIN PCB (C100) SEE 119064

TEST 3 POWER AMPLIFIER STAGES- QUIESCENT CURRENT SETTING

The power amplifier stage quiescent current should be set using the following procedure:-

1 Locate quiescent adjustment presets.

P50, P70, A70 Left channel- VR1
P50, P70, A70 Right channel- VR101
A100 either channel- VR1

Set presets to minimum (clockwise).

2 Set a testmeter to read mV (usually most sensitive range) and connect across component listed below:-

P50, P70, A70 Left channel- D6
P50, P70, A70 Right channel- D106
A100 either channel- R39

3 Set the system volume to minimum. Switch the power on and advance preset setting slowly. Set to 5mV. Repeat for the other channel.

4 Allow the amplifier to settle for 20 mins. Re-adjust preset to 5mV.

TEST 4 POWER AMPLIFIER STAGES

Apply mains power and measure the DC voltage present at the speaker terminals. This voltage should be within +/- 100mV. A large DC offset at this point may indicate a fault in the early stages of the power amplifier. Using the multimeter set to 'Diode test' or 'Ohms' check all transistors on the suspect channel. Proceed to test 5 only when DC offset voltage is within limits.

TEST 5 POWER AMPLIFIER STAGES

Switch the power off, connect the appropriate test equipment to supply a signal to one of the line inputs and to load and monitor the loudspeaker output sockets, then check amplifier performance. The minimum requirement here would be a sine oscillator as signal source, an 8 ohm dummy load of adequate capacity (100W for the A100) and an oscilloscope as waveform monitor.

TEST 6 INTEGRATED AMPLIFIERS (PREAMPLIFIER SECTION)

Faults which occur in the preamp section of the integrated amplifiers should be traced with the aid of the block and circuit diagrams. First check the security of all PCB interconnection cables for both signal routing and power supply. The recommended signal source for tracing is a sine oscillator set to 1kHz frequency and amplitude approximately 300mV RMS for CD input or 3mV RMS for Phono (MM) input. It is then best to test in the following sequence if possible.

1 CD input to Tape Record output. Signal loss here indicates a fault with the input or tape switching.

2 Phono input to Tape record output. Signal loss here indicates a fault within the equalisation stage or EQ power supply, both sited on the EQ select PCB (119058).

3 CD input to headphone output. Remember to advance the volume control setting for this test. Absence of a headphone monitor signal indicates either a headphone drive IC failure or tone amplifier fault. Absence of both channels at this point could also be due to failure of the Control PCB power supply located on the Control PCB (119057).

4 CD input to speaker output terminals. Ensure MUTE switch is set to 'Direct' position. Loss of signal at this stage indicates a possible fault in the power amplifier stage.

TEST 7 POWER SUPPLY (PREAMPLIFIERS)

Preamplifier fault tracing should begin with power supply checks. Check the power supply (both positive and negative) to each of the stages on both the main and the control PCBs. The master supply PCB provides +24V and -24V which is then routed via local sub-regulators to the active stages as shown on the block diagrams. The delay muting relay is also driven from the PSU PCB 119061. The relay should give a soft mechanical click approximately four seconds after power is applied. Failure of the relay contacts to open is likely to be caused by a faulty drive circuit. If all power supplies are present and the muting cicuit is functioning correctly, proceed with signal tracing TEST 8.

TEST 8 SIGNAL TRACING (PREAMPLIFIERS)

Preamplifier signal tracing should be undertaken in conjunction with the circuit and block diagrams. See TEST 6 for recommended test signals.

1 CD input to Record output. (Remember to set REC OUT selector to CD when testing C100).

2 CD input to Passive output. Advance volume setting for this test.

3 CD input to Active output. (Checking buffer amplifier stages)

4 CD input to Headphone output. (Checking headphone amplifier)

5 Phono input to Active output. (Checking Phono EQ amplifier stage)

PARTLIST FOR A100 CHASSIS PARTS

X1	005007 TRANSFORMER GASKET 90mm	X2	006004 TRANSFORMER DISC 90mm	X3	104019 10000uF CAPACITOR RAD
X4	109012 25A BRIDGE RECT	X5	201014 SPEAKER TERM RED	X6	201015 SPEAKER TERM BLACK
X7	300011 CAPACITOR STRAP	X8	402080 TOP COVER	X9	403005 POWER KNOB
X10	403007 FOOT	X11	405016 HEATSINK WASHER	X12	723005 WIRE HARNESS
X13	722010 FRONT PANEL	X14	723000 AMPLIFIER PCB LEFT	X15	723000 AMPLIFIER PCB RIGHT

PARTLIST FOR A70 CHASSIS PARTS

X1	005007 POWER TX GASKET 90mm	X2	006004 POWER TX DISC 90mm	X3	201014 SPEAKER TERM RED
X4	201015 SPEAKER TERM BLACK	X5	402080 TOP COVER	X6	403005 POWER KNOB
X7	403006 STEREO/MONO KNOB	X8	403007 FOOT	X9	405008 HEATSINK WASHER
X10	722005 SCREEN CABLE LEFT	X11	722006 SCREEN CABLE RIGHT	X13	722001 A70 INVERTER BOARD
X14	730004 A70 AMPLIFIER BOARD	X15	730020 PCB CABLE 3P 80mm		

PARTLIST FOR C70/C100 CHASSIS PARTS

X1	002016 GROUND TERMINAL	X2	005005 TRANSFORMER GASKET 50mm	X3	006002 TRANSFORMER DISC 50mm
X4	200020 TAPE SWITCH/FLEX C70 2P	X5	200021 INPUT SWITCH/FLEX C70 4P	X6	402080 TOP COVER
X7	403002 VOL KNOB RIGHT	X8	403003 VOL KNOB LEFT	X9	403004 INPUT KNOB C70
X10	403004 TAPE KNOB C70	X11	403004 BASS KNOB C70	X12	403004 TREBLE KNOB C70
X13	403004 M/D/N KNOB C70	X14	403005 POWER KNOB	X15	403006 MM/MC KNOB
X16	403004 MUTE KNOB C100	X17	403007 FOOT	X18	720010 FRONT PANEL C70
X18	721010 FRONT PANEL C100	X19	730020 PCB CABLE 3P 80mm	X20	730024 PCB CABLE 4P 100mm
X21	730027 PCB CABLE 3P 200mm	X22	730028 PCB CABLE 3P 150mm	X23	720000 MAIN BOARD ASSY C70
X23	721000 MAIN BOARD ASSY C100	X24	720001 CONTROL BOARD ASSY C70	X24	721001 CONTROL BOARD ASSY C100
X25	730002 POWER SUPPLY BOARD	X26	200022 LISTEN SWITCH/FLEX 5P C100	X27	200023 RECORD SWITCH/FLEX 5P C100
X28	403004 LISTEN KNOB C100	X29	403004 RECORD KNOB C100		

PARTLIST FOR P70/P50 CHASSIS PARTS

X1	002016 GROUND TERMINAL	X2	005007 POWER TX GASKET P70	X3	006004 POWER TX DISC P70
X4	200020 TAPE SWITCH + FLEX	X5	200021 INPUT SWITCH + FLEX	X6	201058 SPEAKER TERM (RED)
X7	201059 SPEAKER TERM (BLK)	X8	402080 TOP COVER	X9	403002 VOLUME KNOB RIGHT
X10	403003 VOLUME KNOB LEFT	X11	403004 INPUT SELECT KNOB	X12	403004 TAPE SELECT KNOB
X	403004 BASS KNOB	X14	403004 TREBLE KNOB	X15	403004 MDN SWITCH KNOB
X16	403005 POWER SWITCH KNOB	X17	403006 MC/MM SWITCH KNOB	X18	403007 FOOT
X19	405011 HEATSINK WASHER	X20	724010 FRONT PANEL P50	X20	725010 FRONT PANEL P70
X21	730001 INPUT BOARD ASSY	X22	730003 CONTROL BOARD ASSY	X23	730008 HEATSINK
X24	730020 PCB CABLE 3WAY 80mm	X25	730022 SCREEN CABLE LEFT	X26	730023 SCREEN CABLE RIGHT
X27	730025 PCB CABLE 4WAY (REV)				

PARTLIST FOR CD3/CD3M CHASSIS PARTS

X1	005006 TRANSFORMER GASKET 70mm	X2	006003 TRANSFORMER DISC 70mm	X3	203001 CDM1 MK2 MECHANISM
X4	204001 REMOTE HANDSET	X5	402081 TOP COVER	X6	403000 FUNCTION KNOB
X7	403005 POWER KNOB	X8	403007 FOOT	X9	405009 HEATSINK WASHER
X10	405013 POWER SWITCH SHAFT	X11	750000 POWER SUPPLY BOARD CD3	X11	752001 POWER SUPPLY BOARD CD3M
X12	750001 DISPLAY BOARD ASSY	X13	750002 DIGITAL BOARD ASSY CD3	X13	752000 DIGITAL BOARD ASSY CD3M
X14	750003 KEYBOARD BOARD ASSY	X15	750004 ANALOGUE BOARD ASSY CD3	X16	750006 DAC CARD CD3
X17	750007 16X LOGIC CARD CD3	X18	750010 FRONT PANEL CD3	X18	752010 FRONT PANEL CD3M
X19	750012 DISPLAY PANEL ASSY	X20	750013 DRAWER FRONT	X21	750014 PCB CABLE 5P
X22	750015 PCB CABLE 8P CD3	X23	750016 PCB CABLE 12P	X24	904020 GREEN DISPLAY FILTER
X25	752011 MECH POWER CABLE CD3M				

PARTLIST FOR !! A100 SAFETY CRITICAL PARTS !!

SC1	000504 3.15A A/S FUSE (220/240V)	SC1	000505 6.3A A/S FUSE (120V)	SC2	007007 3.15A FUSE LABEL
SC2	007008 6.3A FUSE LABEL	SC3	122029 POWER TRANSFORMER 120V	SC3	122031 POWER TRANSFORMER 220V
SC3	122033 POWER TRANSFORMER 240V	SC4	201069 POWER INPUT SOCKET	SC5	200001 POWER SWITCH
SC5	200001 POWER SWITCH				

PARTLIST FOR !! A70 SAFETY CRITICAL PARTS !!

SC1	000503 1.6A A/S FUSE (220/240V)	SC1	000504 3.15A A/S FUSE (120V)	SC2	007006 FUSE LABEL 1.6A
SC2	007007 FUSE LABEL 3.15A	SC3	122004 POWER TRANSFORMER 120V	SC3	122006 POWER TRANSFORMER 220V
SC3	122007 POWER TRANSFORMER 240V	SC4	201069 POWER INPUT SOCKET	SC5	200001 POWER SWITCH
SC5	200001 POWER SWITCH				

PARTLIST FOR !! C70/C100 SAFETY CRITICAL PARTS !!

SC1	000506 200mA A/S FUSE (220/240V)	SC1	000508 400mA A/S FUSE (120V)	SC2	007001 FUSE LABEL 200mA
SC2	007002 FUSE LABEL 400mA	SC3	122025 POWER TRANSFORMER 120V	SC3	122026 POWER TRANSFORMER 220V
SC3	122027 POWER TRANSFORMER 240V	SC4	201069 POWER INPUT SOCKET	SC5	200001 POWER SWITCH
SC5	200001 POWER SWITCH				

PARTLIST FOR !! P70/P50 SAFETY CRITICAL PARTS !!

SC1	000502 1.25A A/S FUSE (P50 220V)	SC1	000502 1.25A A/S FUSE (P50 240V)	SC1	000503 1.6A A/S FUSE (P70 220V)
SC1	000503 1.6A A/S FUSE (P70 240V)	SC1	000504 3.15A A/S FUSE (P70 120V)	SC1	000511 2.5A A/S FUSE (P50 120V)
SC2	007005 FUSE LABEL 1.25A (P50 220V)	SC2	007005 FUSE LABEL 1.25A (P50 240V)	SC2	007006 FUSE LABEL 1.6A (P70 220V)
SC2	007006 FUSE LABEL 1.6A (P70 240V)	SC2	007007 FUSE LABEL 3.15A (P70 120V)	SC2	007009 FUSE LABEL 2.5A (P50 120V)
SC3	122000 POWER TRANSFORMER (P50 120V	SC3	122002 POWER TRANSFORMER (P50 220V	SC3	122003 POWER TRANSFORMER (P50 240V
SC3	122004 POWER TRANSFORMER (P70 120V	SC3	122006 POWER TRANSFORMER (P70 220V	SC3	122007 POWER TRANSFORMER (P70 240V
SC4	201069 MAINS INPUT SOCKET	SC5	200001 POWER SWITCH	SC5	200001 POWER SWITCH

PARTLIST FOR !! CD3/CD3M SAFETY CRITICAL PARTS !!

SC1	000508 400mA A/S FUSE (220/240V)	SC1	000509 800mA A/S FUSE (120V)	SC2	007002 FUSE LABEL 400mA
SC2	007004 FUSE LABEL 800mA	SC3	122035 POWER TRANSFORMER 120V	SC3	122036 POWER TRANSFORMER 220V
SC3	122037 POWER TRANSFORMER 240V	SC4	201069 POWER INPUT SOCKET	SC5	200001 POWER SWITCH
SC5	200001 POWER SWITCH				

PARTLIST FOR 119061 C100/C70 POWER SUPPLY PCB

C1	104013 6800uF 35V AX	C2	104013 6800uF 35V AX	C3	105011 1nF 250V AX	C4	105011 1nF 250V AX
C5	000331 10uF 35V TANT BEAD	C6	000331 10uF 35V TANT BEAD	C7	000331 10uF 35V TANT BEAD	C8	000331 10uF 35V TANT BE
C9	000331 10uF 35V TANT BEAD	C10	000331 10uF 35V TANT BEAD				
D1	000350 IN4002	D2	000350 IN4002	D3	000350 IN4002	D4	000350 IN4002
D5	000350 IN4002	D6	000350 IN4002	D7	000350 IN4002	D8	000350 IN4002
D9	000350 IN4002	D10	000350 IN4002	D11	000350 IN4002	D12	000356 18V ZENER
IC1	113004 LM317T	IC2	113005 LM337T				
Q1	000404 BC546B	Q2	000402 BC32B				
R1	000066 4K3	R2	000066 4K3	R3	000036 240R	R4	000036 240R
R5	000075 10K	R6	000107 220K	R7	000075 10K	R8	000051 1K
SK1	201026 PCB PLUG 3P	SK2	201026 PCB PLUG 3P	SK3	201026 PCB PLUG 3P		

PARTLIST FOR 119059 A70 INVERTER PCB

C1	000256 330pF 630V	C2	000250 22pF 160V	C3	000250 22pF 160V	C4	000205 10uF 50V RAD
C5	000205 10uF 50V RAD						
D1	000356 18V ZENER	D2	000356 18V ZENER				
IC1	111016 NE5534AN	IC2	111016 NE5534AN				
Q1	000404 BC546B	Q2	000405 BC556B				
R1	000075 10K	R2	000059 2K2	R3	000083 22K	R4	000043 470R
R5	000061 2K7	R6	000075 10K	R7	000075 10K	R8	000061 2K7
R9	000061 2K7						
SK1	201019 PHONO SOCKET 2P	SK2	201026 PCB PLUG 3P	SK3	201026 PCB PLUG 3P	SK4	201026 PCB PLUG 3P
SW1	200016 2P2W SWITCH (SPUN)						

PARTLIST FOR 119058 P70/P50 INPUT PCB

C1	000253 100pF 630V AX	C2	106017 4.7uF 100V	C3	000265 2.7nF 160V	C4	000253 100pF 630V AX
C5	000268 8.2nF 160V	C6	000261 1nF 250V	C7	106014 470nF 100V	C8	000211 220uF 25V RAD
C9	000211 220uF 25V RAD	C10	000205 10uF 50V RAD	C11	000205 10uF 50V RAD	C101	000253 100pF 630V AX
C102	106017 4.7uF 100V	C103	000265 2.7nF 160V	C104	000253 100pF 630V AX	C105	000268 8.2nF 160V
C106	000261 1nF 250V	C107	106014 470nF 100V				
D1	000356 18V ZENER DIODE	D2	000356 18V ZENER DIODE				
IC1	111016 NE5534AN	IC2	111014 NE5532N	IC101	111016 NE5534AN		
Q1	110028 2SD600K	Q2	110025 2SB631K				
R1	000003 10R	R2	000091 47K	R3	000043 470R	R4	000019 47R
R5	000061 2K7	R6	000063 3K3	R7	000111 330K	R8	000085 27K
R9	000055 1K5	R10	000085 27K	R11	000051 1K	R12	000097 82K
R13	000051 1K	R14	000091 47K	R15	000091 47K	R16	000091 47K
R17	000091 47K	R18	000034 200R	R19	000061 2K7	R20	000061 2K7
R101	000003 10R	R102	000091 47K	R103	000043 470R	R104	000019 47R
[illegible]	000061 2K7	R106	000063 3K3	R107	000111 330K	R108	000085 27K
R109	000055 1K5	R110	000085 27K	R111	000051 1K	R112	000097 82K
R113	000051 1K	R114	000091 47K	R115	000091 47K	R116	000091 47K
R117	000091 47K	R118	000034 200R				
SK1	201018 PHONO SOCKET 4P	SK2	201018 PHONO SOCKET 4P	SK3	201018 PHONO SOCKET 4P	SK4	201027 PCB PLUG 4P
SK5	201026 PCB PLUG 3P	SK6	201026 PCB PLUG 3P				
SW1	200016 2P2W SWITCH (SPUN)	SW2	200013 2P4W SWITCH (SSSR)	SW3	200014 2P3W SWITCH (SSSR)		

PARTLIST FOR 119057 C70/P70/P50 CONTROL PCB

C1	106011 100nF 100V	C2	106011 100nF 100V	C3	000261 1nF 250V	C4	106015 1uF 100V
C5	000205 10uF 50V RAD	C6	000205 10uF 50V RAD	C7	000211 220uF 25V RAD	C8	000211 220uF 25V RAD
C101	106011 100nF 100V	C102	106011 100nF 100V	C103	000261 1nF 250V	C104	106015 1uF 100V
D1	000356 18V ZENER	D2	000356 18V ZENER				
IC1	111014 NE5532N	IC2	111014 NE5532N	IC3	111014 NE5532N		
Q1	110028 2SD600K	Q2	110025 2SB631K				
R1	000075 10K	R2	000099 100K	R3	000075 10K	R4	000059 2K2
R5	000068 5K1	R6	000083 22K	R7	000067 4K7	R8	000077 12K
R9	000038 300R	R10	000067 4K7	R11	000087 33K	R12	000091 47K
R13	000075 10K	R14	000081 18K	R15	000041 390R	R16	000051 1K
R17	000003 10R	R18	000061 2K7	R19	000061 2K7	R101	000075 10K
R102	000099 100K	R103	000075 10K	R104	000059 2K2	R105	000068 5K1
R106	000083 22K	R107	000067 4K7	R108	000077 12K	R109	000038 300R
R1[illegible]	000067 4K7	R111	000087 33K	R112	000091 47K	R113	000075 10K
R1[illegible]	000081 18K	R115	000041 390R	R116	000051 1K	R117	000003 10R
SK2	201026 PCB PLUG 3P	SK3	201026 PCB PLUG 3P	SK4	201026 PCB PLUG 3P	SK5	201068 HEADPHONE SOCKET
SW1	200010 2P3W SWITCH (SRBU)						
VR1	102020 20K POT (P50/P70)	VR1	102022 20K LOG POT (C70)	VR2	102021 20K LIN POT	VR3	102021 20K LIN POT

PARTLIST FOR 119055 A70/P70/P50 MAIN AMP PCB

C1	000256 330pF 630V AX	C2	000256 330pF 630V AX	C3	000202 2.2uF 16V RAD	C4	104025 220uF 6V BIPOLAR
C5	000256 330pF 630V AX	C6	000256 330pF 630V AX	C101	000256 330pF 630V AX	C102	000256 330pF 630V AX
C103	000202 2.2uF 16V RAD	C104	104025 220uF 6V BIPOLAR	C105	000256 330pF 630V AX	C106	000256 330pF 630V AX

D1	000351 1N4148	D2	000351 1N4148	D3	000350 1N4002	D4	000350 1N4002
D5	000351 1N4148	D6	000350 1N4002	D7	000350 1N4002	D8	000350 1N4002
D101	000351 1N4148	D102	000351 1N4148	D103	000350 1N4002	D104	000350 1N4002
D105	000351 1N4148	D106	000350 1N4002	D107	000350 1N4002	D108	000350 1N4002

FS1	000500 5A FUSE QB	FS2	000500 5A FUSE QB

L1	114000 INDUCTOR	L101	114000 INDUCTOR

Q1	110008 BC546B	Q2	110011 BC556B	Q3	110011 BC556B	Q4	110008 BC546B
Q5	110008 BC546B	Q6	110011 BC556B	Q7	110011 BC556B	Q8	110008 BC546B
	110011 BC556B	Q10	110008 BC546B	Q11	110008 BC546B	Q12	110008 BC546B
Q13	110011 BC556B	Q14	110027 2SC2238	Q15	110024 2SA968	Q16	110029 2SD1046E
Q17	110029 2SD1046E	Q18	110029 2SD1046E	Q19	110029 2SD1046E	Q101	110008 BC546B
Q102	110011 BC556B	Q103	110011 BC556B	Q104	110008 BC546B	Q105	110008 BC546B
Q106	110011 BC556B	Q107	110011 BC556B	Q108	110008 BC546B	Q109	110011 BC556B
Q110	110008 BC546B	Q111	110008 BC546B	Q112	110008 BC546B	Q113	110011 BC556B
Q114	110027 2SC2238	Q115	110024 2SA968	Q116	110029 2SD1046E	Q117	110029 2SD1046E
Q118	110029 2SD1046E	Q119	110029 2SD1046E				

R1	000067 4K7	R2	000096 75K	R3	000075 10K	R4	000051 1K
R5	000019 47R	R6	000051 1K	R7	000019 47R	R8	000075 10K
R9	000027 100R	R10	000055 1K5	R11	000037 270R	R12	000081 18K
R13	000027 100R	R14	000096 75K (A70)	R14	000101 120K (P50/P70)	R15	000027 100R
R16	000063 3K3	R17	000047 680R	R18	000027 100R	R19	000034 200R
R20	000027 100R	R21	000034 200R	R22	000027 100R ?	R23	000002 4R7
R24	000002 4R7	R25	000000 1R	R26	000000 1R	R27	000000 1R
R28	000000 1R	R29	000027 100R	R30	000002 4R7	R31	000002 4R7
R32	000000 1R	R33	000000 1R	R34	000000 1R	R35	000000 1R
[illegible]	000000 1R	R37	000000 1R	R101	000067 4K7	R102	000096 75K
R103	000075 10K	R104	000051 1K	R105	000019 47R	R106	000051 1K
R107	000019 47R	R108	000075 10K	R109	000027 100R	R110	000055 1K5
R111	000037 270R	R112	000081 18K	R113	000027 100R	R114	000096 75K (A70)
R114	000101 120K (P50/P70)	R115	000027 100R	R116	000063 3K3	R117	000047 680R
R118	000027 100R	R119	000034 200R	R120	000027 100R	R121	000034 200R
R122	000027 100R	R123	000002 4R7	R124	000002 4R7	R125	000000 1R
R126	000000 1R	R127	000000 1R	R128	000000 1R	R129	000027 100R
R130	000002 4R7	R131	000002 4R7	R132	000000 1R	R133	000000 1R
R134	000000 1R	R135	000000 1R	R136	000000 1R	R137	000000 1R

VR1	102004 100R PRESET	VR101	102004 100R PRESET

PARTLIST FOR 119064 C70 MAIN PCB

C1	000253 100pF 630V AX	C2	000258 470pF 630V AX	C4	104026 1000uF 6V RAD	C5	000256 330pF 630V AX
C6	000256 330pF 630V AX	C7	000269 22nF 63V	C8	108017 680nF 100V	C9	108016 4.7uF 100V
C10	000256 330pF 630V AX	C11	106015 1uF 100V	C12	000256 330pF 630V AX	C13	108016 4.7uF 100V
C14	000211 220uF 25V RAD	C15	000205 10uF 50V RAD	C16	000211 220uF 25V RAD	C17	000205 10uF 50V RAD
C18	000211 220uF 25V RAD	C19	000205 10uF 50V RAD	C20	000211 220uF 25V RAD	C21	000205 10uF 50V RAD
C22	106015 1uF 100V	C101	000253 100pF 630V AX	C102	000258 470pF 630V AX	C104	104026 1000uF 6V RAD
C105	000256 330pF 630V AX	C106	000256 330pF 630V AX	C107	000269 22nF 63V	C108	108017 680nF 100V
C109	108016 4.7uF 100V	C110	000256 330pF 630V AX	C111	106015 1uF 100V	C112	000256 330pF 630V AX
C113	108016 4.7uF 100V	C122	106015 1uF 100V				

D1	000351 1N4148	D2	000351 1N4148	D3	000351 1N4148	D4	000351 1N4148
D5	000351 1N4148	D6	000351 1N4148	D7	000351 1N4148	D8	000351 1N4148
D9	000351 1N4148	D10	000351 1N4148	D11	000351 1N4148	D12	000356 18V ZENER
D13	000356 18V ZENER	D14	000356 18V ZENER	D15	000356 18V ZENER	D101	000351 1N4148
D102	000351 1N4148	D103	000351 1N4148	D104	000351 1N4148	D105	000351 1N4148
D106	000351 1N4148	D107	000351 1N4148	D108	000351 1N4148	D109	000351 1N4148
D110	000351 1N4148	D111	000351 1N4148				

	111016 NE5534AN	IC2	111016 NE5534AN	IC101	111016 NE5534AN	IC102	111016 NE5534AN

Q1	110028 2SD600K	Q2	000405 BC556B	Q3	000405 BC556B	Q4	110028 2SD600K
Q5	000404 BC546B	Q6	000405 BC556B	Q7	000405 BC556B	Q8	000404 BC546B
Q9	000405 BC556B	Q10	000404 BC546B	Q11	000404 BC546B	Q12	000405 BC556B
Q13	000404 BC546B	Q14	000404 BC546B	Q15	000404 BC546B	Q16	000405 BC556B
Q17	000404 BC546B	Q18	000403 BC338	Q19	000402 BC328	Q20	110028 2SD600K
Q21	110025 2SB631K	Q22	110028 2SD600K	Q23	110025 2SB631K	Q101	110028 2SD600K
Q102	000405 BC556B	Q103	000405 BC556B	Q104	110028 2SD600K	Q105	000404 BC546B
Q106	000405 BC556B	Q107	000405 BC556B	Q108	000404 BC546B	Q109	000405 BC556B
Q110	000404 BC546B	Q111	000404 BC546B	Q112	000405 BC556B	Q113	000404 BC546B
Q114	000404 BC546B	Q115	000404 BC546B	Q116	000405 BC556B	Q117	000404 BC546B
Q118	000403 BC338	Q119	000402 BC328				

R1	000027 100R	R2	000091 47K	R3	000043 470R	R4	000051 1K
R5	000051 1K	R6	000051 1K	R7	000051 1K	R8	000023 68R
R9	000081 18K	R10	000004 11R	R11	000027 100R	R12	000027 100R
R13	000027 100R	R14	000027 100R	R15	000027 100R	R16	000051 1K
R17	000027 100R	R18	000027 100R	R19	000063 3K3	R20	000027 100R
R21	000083 22K	R22	000047 680R	R23	000067 4K7	R24	000063 3K3
R25	000044 510R	R26	000042 430R	R27	000007 15R	R28	000046 620R
R29	000067 4K7	R30	000099 100K	R31	000027 100R	R32	000051 1K
R33	000091 47K	R34	000091 47K	R35	000091 47K	R36	000091 47K
R37	000063 3K3	R38	000096 75K	R39	000059 2K2	R40	000059 2K2
R41	000019 47R	R42	000019 47R	R43	000044 510R	R44	000080 16K
R45	000080 16K	R46	000081 18K	R47	000042 430R	R48	000042 430R
R49	000019 47R	R50	000019 47R	R51	000011 22R	R52	000075 10K
R53	000061 2K7	R54	000061 2K7	R55	000061 2K7	R56	000061 2K7
R101	000027 100R	R102	000091 47K	R103	000043 470R	R104	000051 1K
R105	000051 1K	R106	000051 1K	R107	000051 1K	R108	000023 68R
R109	000081 18K	R110	000004 11R	R111	000027 100R	R112	000027 100R
R113	000027 100R	R114	000027 100R	R115	000027 100R	R116	000051 1K
R117	000027 100R	R118	000027 100R	R119	000063 3K3	R120	000027 100R
R121	000083 22K	R122	000047 680R	R123	000067 4K7	R124	000063 3K3
R125	000044 510R	R126	000042 430R	R127	000007 15R	R128	000046 620R
R129	000067 4K7	R130	000099 100K	R131	000027 100R	R132	000051 1K
R133	000091 47K	R134	000091 47K	R135	000091 47K	R136	000091 47K
R137	000063 3K3	R138	000096 75K	R139	000059 2K2	R140	000059 2K2
R141	000019 47R	R142	000019 47R	R143	000044 510R	R144	000080 16K

PARTLIST FOR 119064 C70 MAIN PCB contd

R145	000080 16K	R146	000081 18K	R147	000042 430R	R148	000042 430R
R149	000019 47R	R150	000019 47R	R151	000011 22R	R152	000075 10K

RL1	124002 RELAY 24V 2P

SK1	201019 PHONO SOCKET 2P	SK2	201019 PHONO SOCKET 2P	SK3	201018 PHONO SOCKET 4P	SK4	201018 PHONO SOCKET 4P
SK5	201018 PHONO SOCKET 4P	SK6	201027 PCB PLUG 4P	SK7	201026 PCB PLUG 3P	SK8	201026 PCB PLUG 3P
SK9	201026 PCB PLUG 3P	SK10	201026 PCB PLUG 3P				

SW1	200017 4P2W SWITCH (SPUN)	SW2	200013 2P4W SWITCH (SSSR)	SW3	200014 2P2W SWITCH (SSSR)

PARTLIST FOR 119063 C100 HEADPHONE AMP.

C1	000256 330pF 630V	C2	104025 220uF 6V BIPOLAR	C3	000251 56pF 63V AX	C4	000251 56pF 63V AX
C5	104025 220uF 6V BIPOLAR	C6	000267 6800pF 160V AX	C7	000211 220uF 25V RAD	C8	000211 220uF 25V RAD
C9	000205 10uF 50V RAD	C10	000205 10uF 50V RAD	C11	106015 1uF 100V	C101	000256 330pF 630V
C102	104025 220uF 6V BIPOLAR	C103	000251 56pF 63V AX	C104	000251 56pF 63V AX	C105	104025 220uF 6V BIPOLAR
C106	000267 6800pF 160V AX	C111	106015 1uF 100V				

D1	000351 1N4148	D2	000351 1N4148	D3	000351 1N4148	D4	000351 1N4148
D5	000351 1N4148	D6	000356 18V ZENER	D7	000356 18V ZENER	D101	000351 1N4148
D102	000351 1N4148	D103	000351 1N4148	D104	000351 1N4148	D105	000351 1N4148

Q1	000404 BC546B	Q2	000405 BC556B	Q3	000405 BC556B	Q4	000404 BC546B
Q5	000404 BC546B	Q6	000405 BC556B	Q7	000405 BC556B	Q8	000404 BC546B
Q9	000405 BC556B	Q10	000404 BC546B	Q11	000403 BC338	Q12	000402 BC328
Q13	110028 2SD600K	Q14	110025 2SB631K	Q101	000404 BC546B	Q102	000405 BC556B
Q103	000405 BC556B	Q104	000404 BC546B	Q105	000404 BC546B	Q106	000405 BC556B
Q107	000405 BC556B	Q108	000404 BC546B	Q109	000405 BC556B	Q110	000404 BC546B
Q111	000403 BC338	Q112	000402 BC328				

R1	000063 3K3	R2	000096 75K	R3	000067 4K7	R4	000051 1K
R5	000051 1K	R6	000067 4K7	R7	000051 1K	R8	000051 1K
R9	000031 150R	R10	000081 18K	R11	000055 1K5	R12	000027 100R
R13	000027 100R	R14	000027 100R	R15	000027 100R	R16	000085 27K
R17	000015 33R	R18	000015 33R	R19	000027 100R	R20	000075 10K
R21	000061 2K7	R22	000061 2K7	R101	000063 3K3	R102	000096 75K
R103	000067 4K7	R104	000051 1K	R105	000051 1K	R106	000067 4K7
R107	000051 1K	R108	000051 1K	R109	000031 150R	R110	000081 18K
R111	000055 1K5	R112	000027 100R	R113	000027 100R	R114	000027 100R
R115	000027 100R	R116	000085 27K	R117	000015 33R	R118	000015 33R
R119	000027 100R	R120	000075 10K				

SK1	201027 PCB PLUG 4P	SK2	201026 PCB PLUG 3P	SK3	201068 HEADPHONE SOCKET	SK4	201026 PCB PLUG 3P

SW1 200007 2P2W SWITCH (SRBU)

VR1 102022 20K LOG POT RK181

PARTLIST FOR 119065 C100 MAIN PCB

C1	000253 100pF 630V AX	C2	000258 470pF 630V AX	C4	104026 1000uF 6V BIPOLAR	C5	000256 330pF 630V AX
C6	000256 330pF 630V AX	C7	000269 22nF 63V AX	C8	108017 680nF 100V	C9	108016 4.7uF 100V
C10	000256 330pF 630V AX	C11	104025 220uF 6V BIPOLAR	C12	000251 56pF 63V AX	C13	000251 56pF 63V AX
C14	000261 1nF 250V AX	C15	108016 4.7uF 100V	C16	000211 220uF 25V RAD	C17	000205 10uF 50V RAD
C18	000211 220uF 25V RAD	C19	000205 10uF 50V RAD	C20	000211 220uF 25V RAD	C21	000205 10uF 50V RAD
C22	000211 220uF 25V RAD	C23	000205 10uF 50V RAD	C24	000211 220uF 25V RAD	C25	000205 10uF 50V RAD
C26	000211 220uF 25V RAD	C27	000205 10uF 50V RAD	C28	106015 1uF 100V	C29	106015 1uF 100V
C101	000253 100pF 630V AX	C102	000258 470pF 630V AX	C104	104026 1000uF 6V BIPOLAR	C105	000256 330pF 630V AX
C106	000256 330pF 630V AX	C107	000269 22nF 63V AX	C108	108017 680nF 100V	C109	108016 4.7uF 100V
C110	000256 330pF 630V AX	C111	104025 220uF 6V BIPOLAR	C112	000251 56pF 63V AX	C113	000251 56pF 63V AX
C114	000261 1nF 250V AX	C115	108016 4.7uF 100V	C128	106015 1uF 100V	C129	106015 1uF 100V

D1	000351 1N4148	D2	000351 1N4148	D3	000351 1N4148	D4	000351 1N4148
D5	000351 1N4148	D6	000351 1N4148	D7	000351 1N4148	D8	000351 1N4148
D9	000351 1N4148	D10	000351 1N4148	D11	000356 18V ZENER	D12	000356 18V ZENER
D13	000356 18V ZENER	D14	000356 18V ZENER	D15	000356 18V ZENER	D16	000356 18V ZENER
D101	000351 1N4148	D102	000351 1N4148	D103	000351 1N4148	D104	000351 1N4148
D[illegible]	000351 1N4148	D106	000351 1N4148	D107	000351 1N4148	D108	000351 1N4148
D[illegible]	000351 1N4148	D110	000351 1N4148				

IC1	111016 NE5534AN	IC2	111016 NE5534AN	IC101	111016 NE5534AN	IC102	111016 NE5534AN

Q1	110028 2SD600K	Q2	000405 BC556B	Q3	000405 BC556B	Q4	110028 2SD600K
Q5	000404 BC546B	Q6	000405 BC556B	Q7	000405 BC556B	Q8	000404 BC546B
Q9	000405 BC556B	Q10	000404 BC546B	Q11	000404 BC546B	Q12	000405 BC556B
Q13	000404 BC546B	Q14	000405 BC556B	Q15	000405 BC556B	Q16	000404 BC546B
Q17	000404 BC546B	Q18	000405 BC556B	Q19	000405 BC556B	Q20	000404 BC546B
Q21	000405 BC556B	Q22	000404 BC546B	Q23	000403 BC338	Q24	000402 BC328
Q25	110028 2SD600K	Q26	110025 2SB631K	Q27	110028 2SD600K	Q28	110025 2SB631K
Q29	110028 2SD600K	Q30	110025 2SB631K	Q101	110028 2SD600K	Q102	000405 BC556B
Q103	000405 BC556B	Q104	110028 2SD600K	Q105	000404 BC546B	Q106	000405 BC556B
Q107	000405 BC556B	Q108	000404 BC546B	Q109	000405 BC556B	Q110	000404 BC546B
Q111	000404 BC546B	Q112	000405 BC556B	Q113	000404 BC546B	Q114	000405 BC556B
Q115	000405 BC556B	Q116	000404 BC546B	Q117	000404 BC546B	Q118	000405 BC556B
Q119	000405 BC556B	Q120	000404 BC546B	Q121	000405 BC556B	Q122	000404 BC546B
	000403 BC338	Q124	000402 BC328				

R1	000027 100R	R2	000091 47K	R3	000043 470R	R4	000051 1K
R5	000051 1K	R6	000051 1K	R7	000051 1K	R8	000023 68R
R9	000081 18K	R10	000004 11R	R11	000027 100R	R12	000027 100R
R13	000027 100R	R14	000027 100R	R15	000027 100R	R16	000051 1K
R17	000027 100R	R18	000027 100R	R19	000063 3K3	R20	000027 100R
R21	000083 22K	R22	000047 680R	R23	000067 4K7	R24	000063 3K3
R25	000044 510R	R26	000042 430R	R27	000007 15R	R28	000046 620R
R29	000067 4K7	R30	000099 100K	R31	000027 100R	R32	000051 1K
R33	000091 47K	R34	000091 47K	R35	000091 47K	R36	000091 47K
R37	000051 1K	R38	000063 3K3	R39	000096 75K	R40	000051 1K
R41	000051 1K	R42	000051 1K	R43	000051 1K	R44	000051 1K
R45	000051 1K	R46	000031 150R	R47	000081 18K	R48	000055 1K5
R49	000027 100R	R50	000027 100R	R51	000027 100R	R52	000027 100R
R53	000064 3K6	R54	000015 33R	R55	000015 33R	R56	000019 47R
R57	000075 10K	R58	000061 2K7	R59	000061 2K7	R60	000061 2K7
R61	000061 2K7	R62	000061 2K7	R63	000061 2K7	R101	000027 100R
R102	000091 47K	R103	000043 470R	R104	000051 1K	R105	000051 1K
R106	000051 1K	R107	000051 1K	R108	000023 68R	R109	000081 18K
R110	000004 11R	R111	000027 100R	R112	000027 100R	R113	000027 100R

PARTLIST FOR 119065 C100 MAIN PCB contd

R114	000027 100R	R115	000027 100R	R116	000051 1K	R117	000027 100R
R118	000027 100R	R119	000063 3K3	R120	000027 100R	R121	000083 22K
R122	000047 680R	R123	000067 4K7	R124	000063 3K3	R125	000044 510R
R126	000042 430R	R127	000007 15R	R128	000046 620R	R129	000067 4K7
R130	000099 100K	R131	000027 100R	R132	000051 1K	R133	000091 47K
R134	000091 47K	R135	000091 47K	R136	000091 47K	R137	000051 1K
R138	000063 3K3	R139	000096 75K	R140	000051 1K	R141	000051 1K
R142	000051 1K	R143	000051 1K	R144	000051 1K	R145	000051 1K
R146	000031 150R	R147	000081 18K	R148	000055 1K5	R149	000027 100R
R150	000027 100R	R151	000027 100R	R152	000027 100R	R153	000064 3K6
R154	000015 33R	R155	000015 33R	R156	000019 47R	R157	000075 10K

RL1 124002 RELAY 2P 24V

SK1	201019 PHONO SOCKET 2P	SK2	201018 PHONO SOCKET 4P	SK3	201018 PHONO SOCKET 4P	SK4	201018 PHONO SOCKET 4P
SK5	201018 PHONO SOCKET 4P	SK6	201026 PCB PLUG 3P	SK7	201026 PCB PLUG 3P	SK8	201027 PCB PLUG 4P
[illegible]	201026 PCB PLUG 3P						

SW1	200017 4P2W SWITCH (SPUN)	SW2	200011 2P6W SWITCH (SSSR)	SW3	200012 4P6W SWITCH (SSSR)

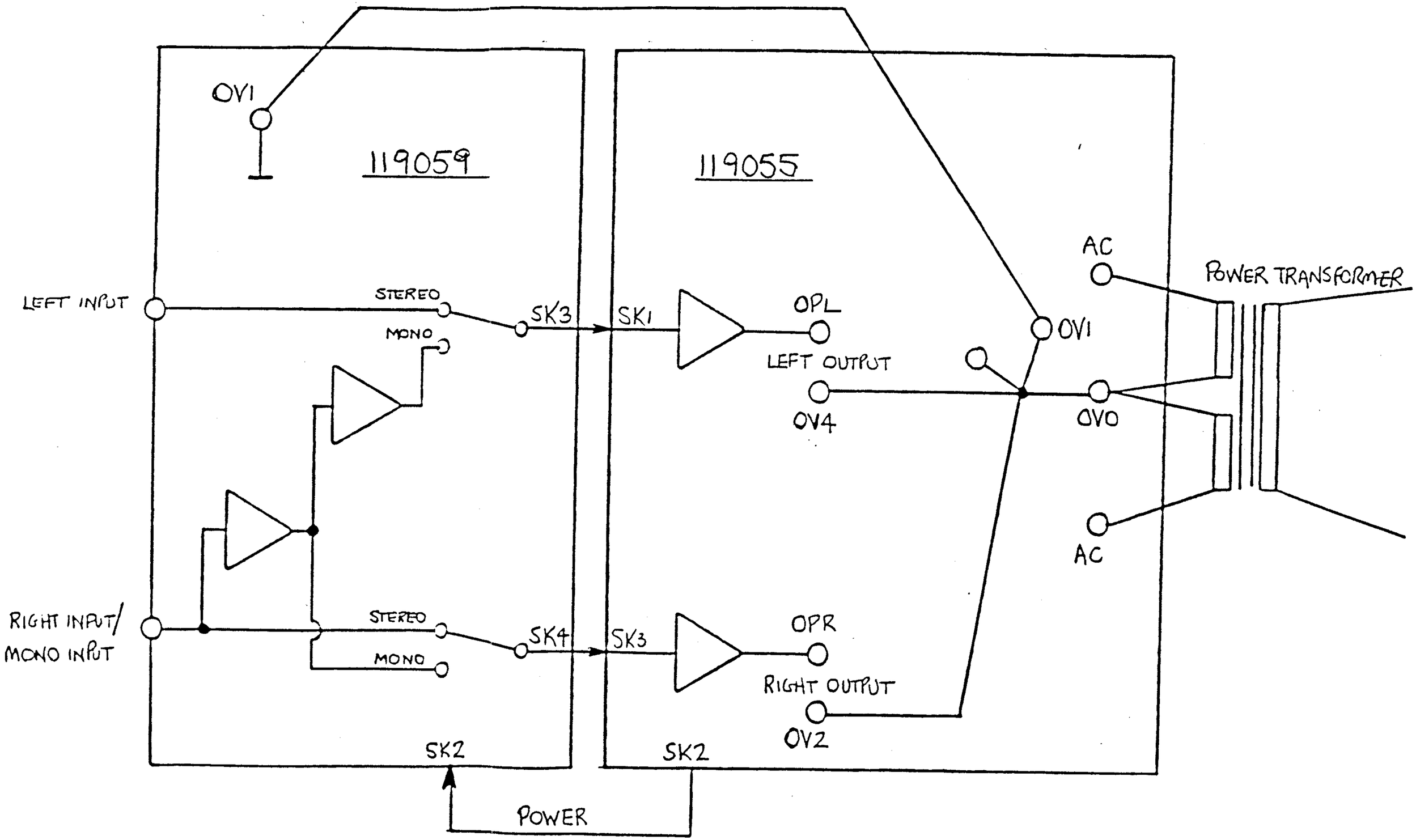

A70 BLOCK DIAGRAM

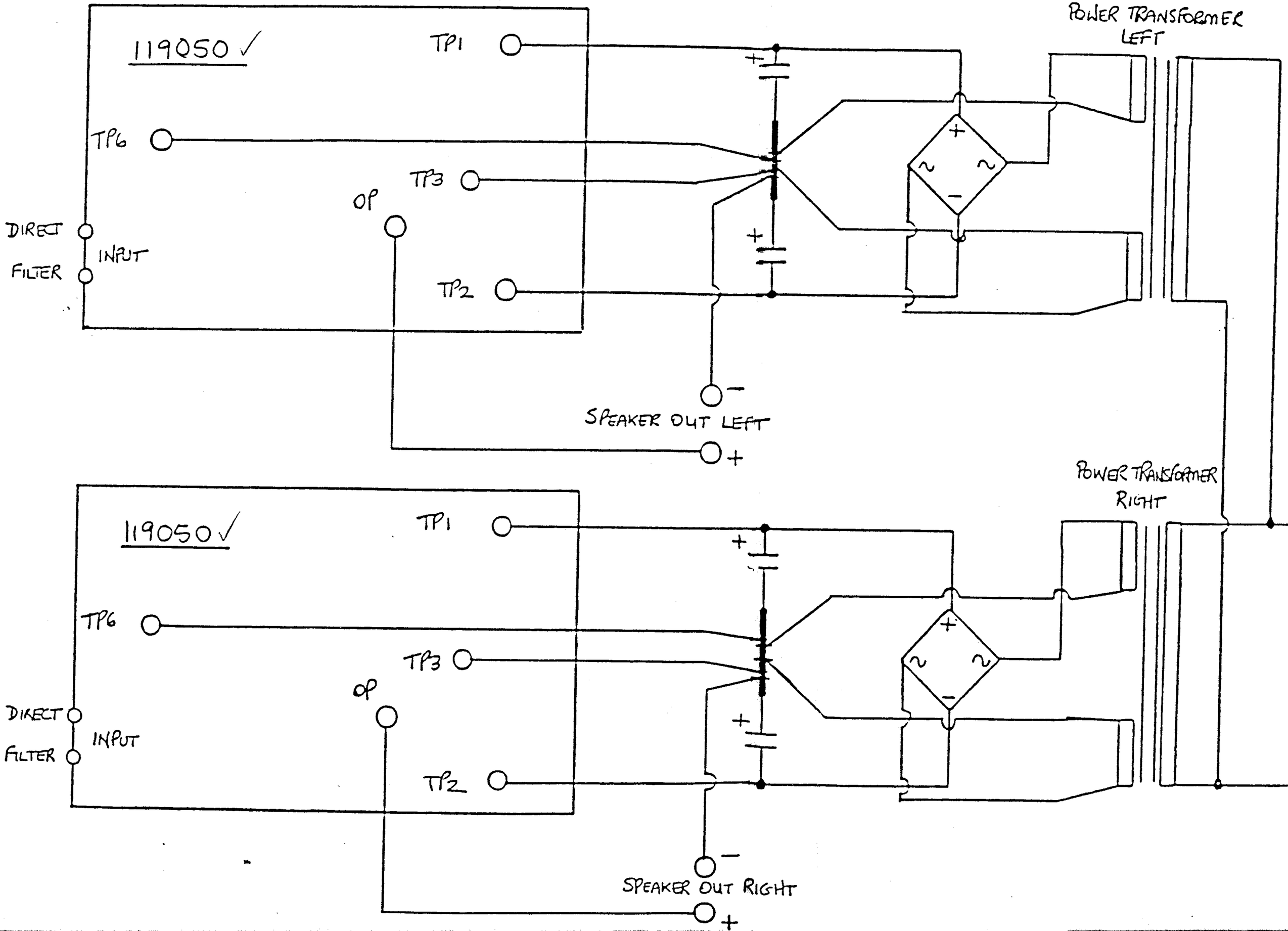
119050 ✓
TP1
TP6
TP3
OP
TP2
DIRECT
INPUT
FILTER
POWER TRANSFORMER LEFT
SPEAKER OUT LEFT
119050 ✓
TP1
TP6
TP3
OP
TP2
DIRECT
INPUT
FILTER
POWER TRANSFORMER RIGHT
SPEAKER OUT RIGHT

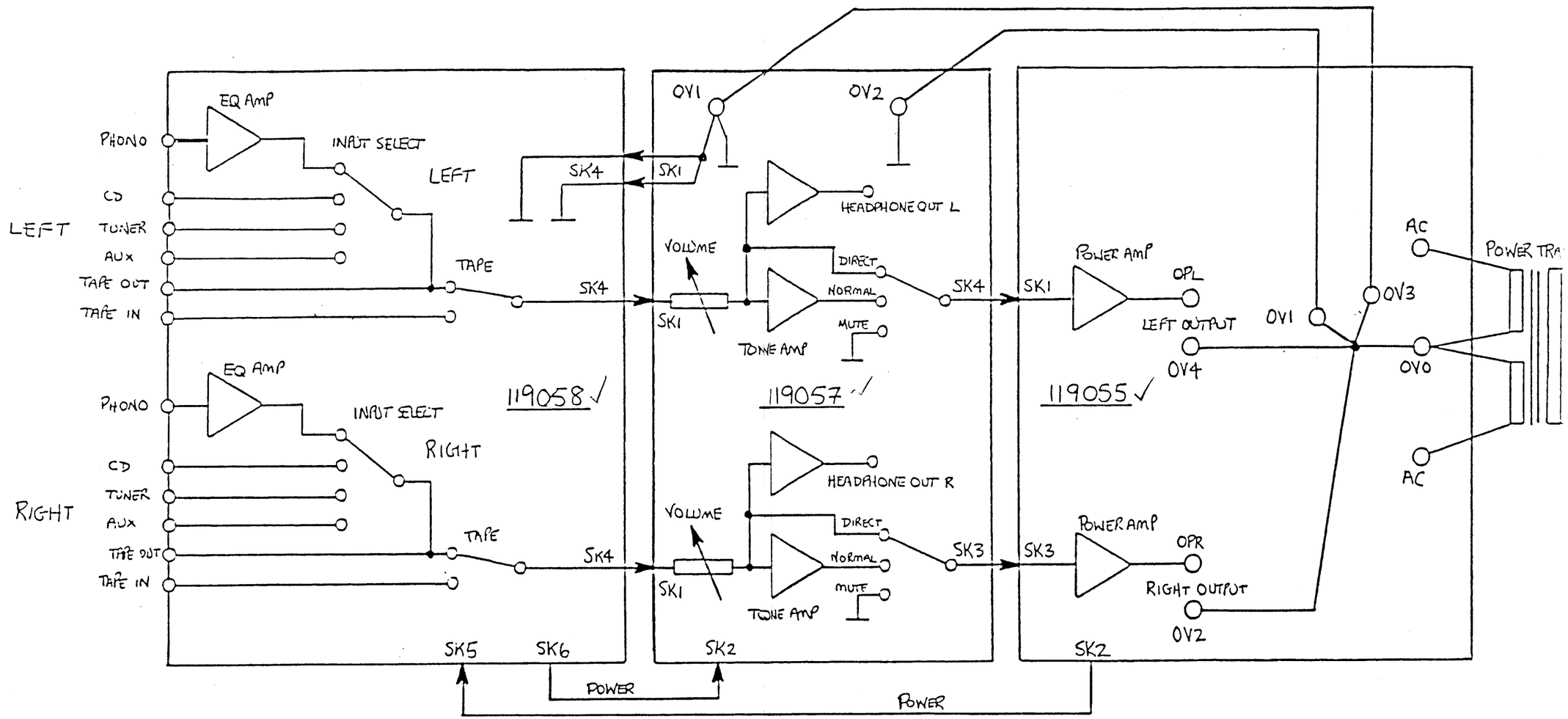

P50/P70 BLOCK DIAGRAM

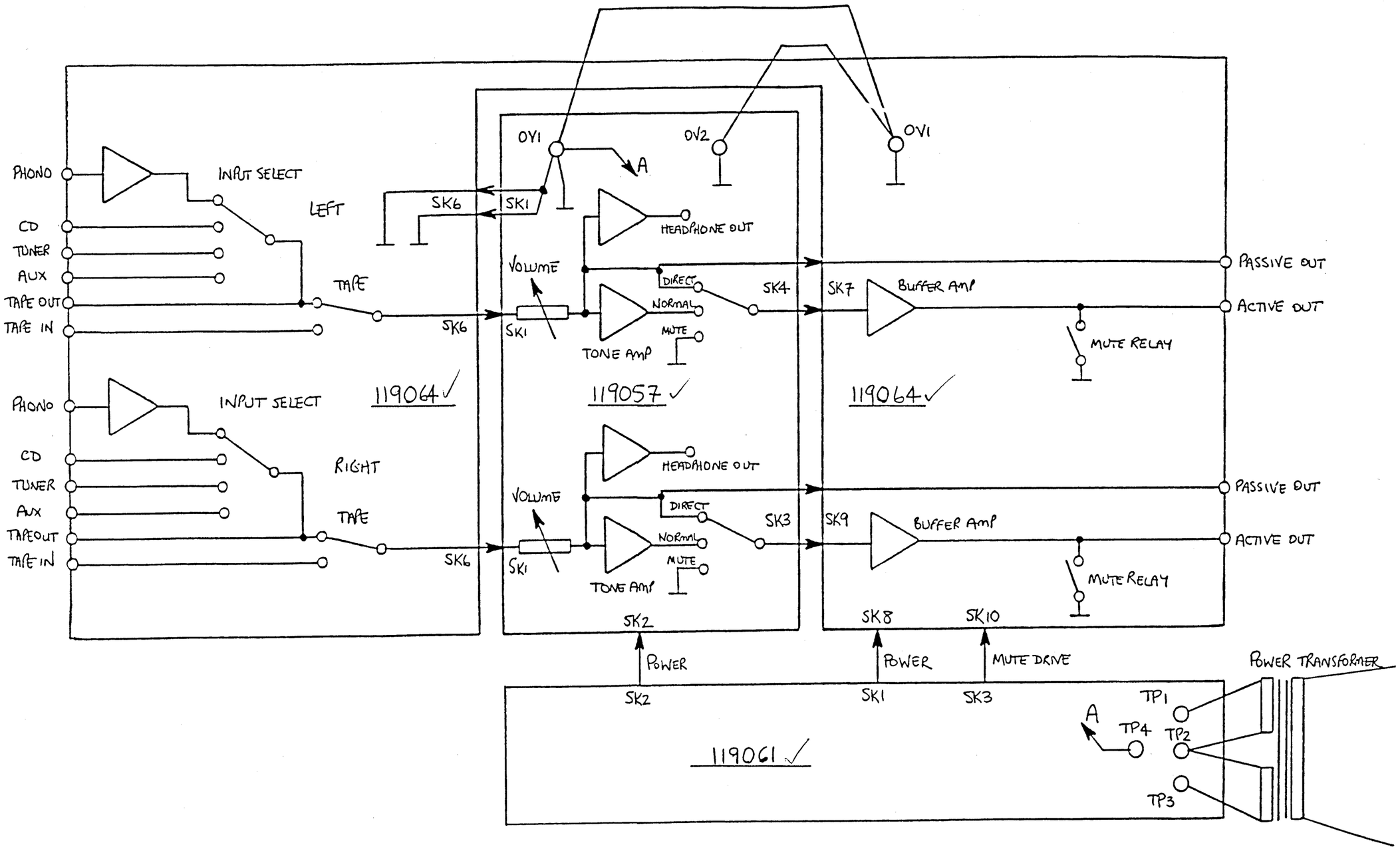

C70 BLOCK DIAGRAM

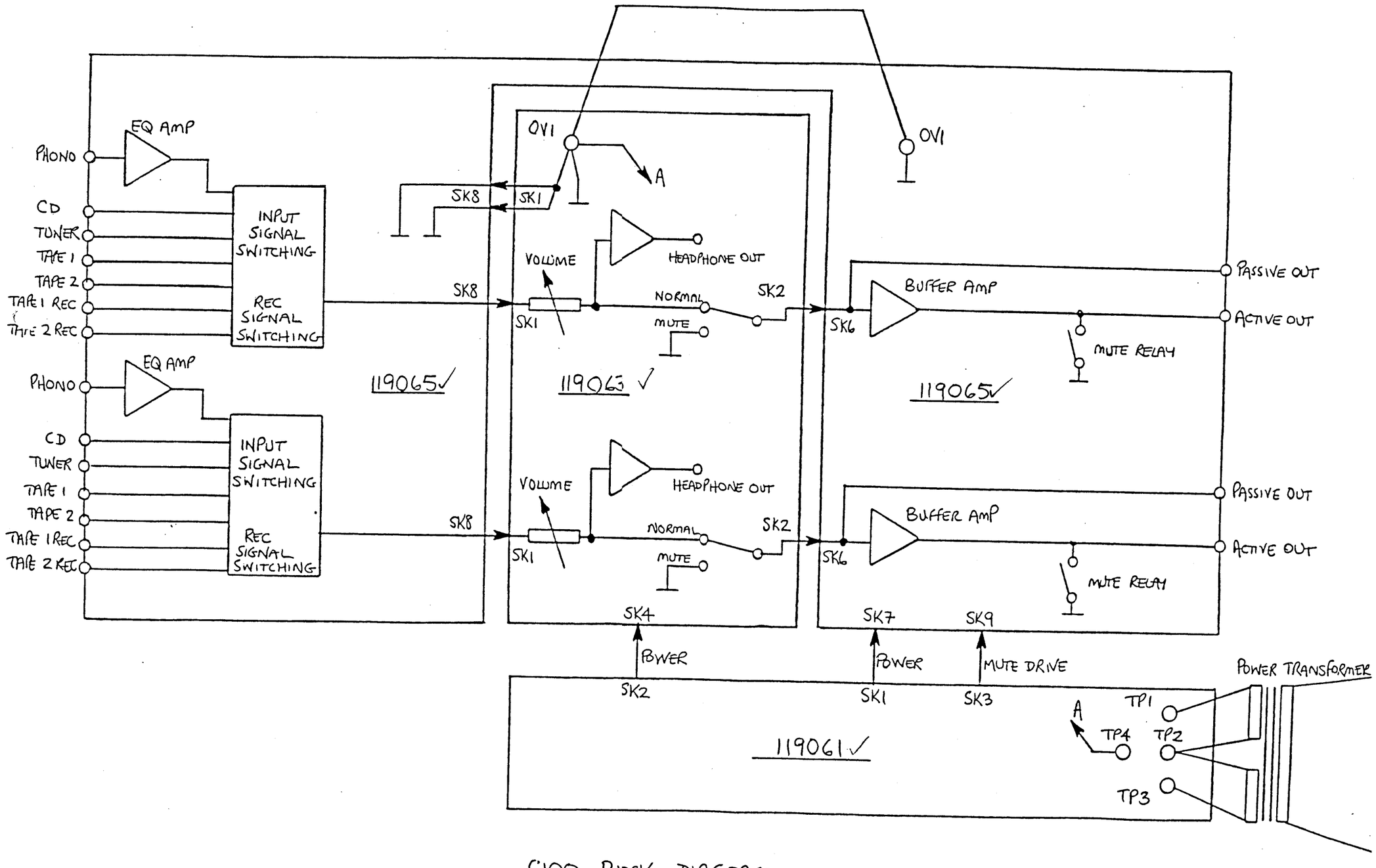

C100 BLOCK DIAGRAM

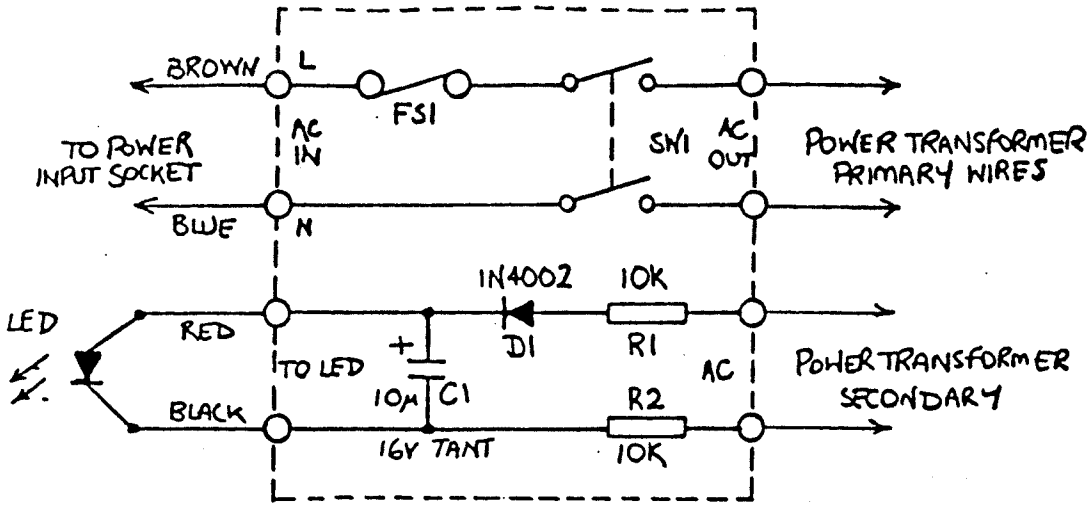

POWER SWITCH BOARD ALL MODELS

TRANSISTOR LEADOUT

	1	2	3
BC328	C	B	E
BC338	C	B	E
BCS46B	C	B	E
BCS56B	C	B	E
BF423	E	C	B
MPSA42	E	B	C
MPSA93	E	B	C

TO92

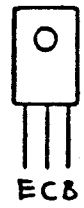

2SB631
2SD600

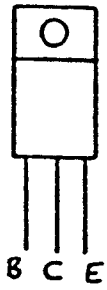

2SA968
2SC2238

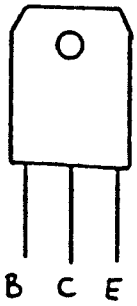

2SD1046

FRONT VIEW

PCB CONNECTORS

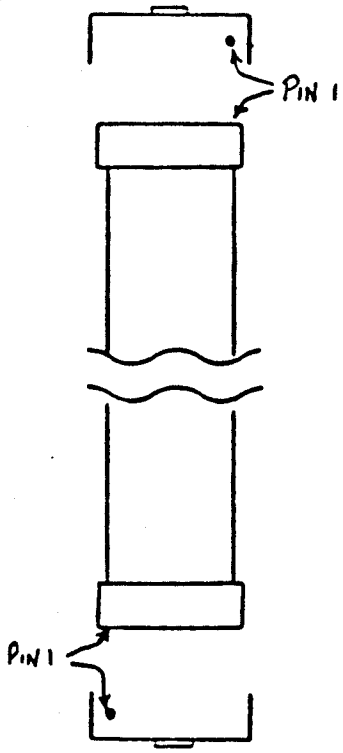

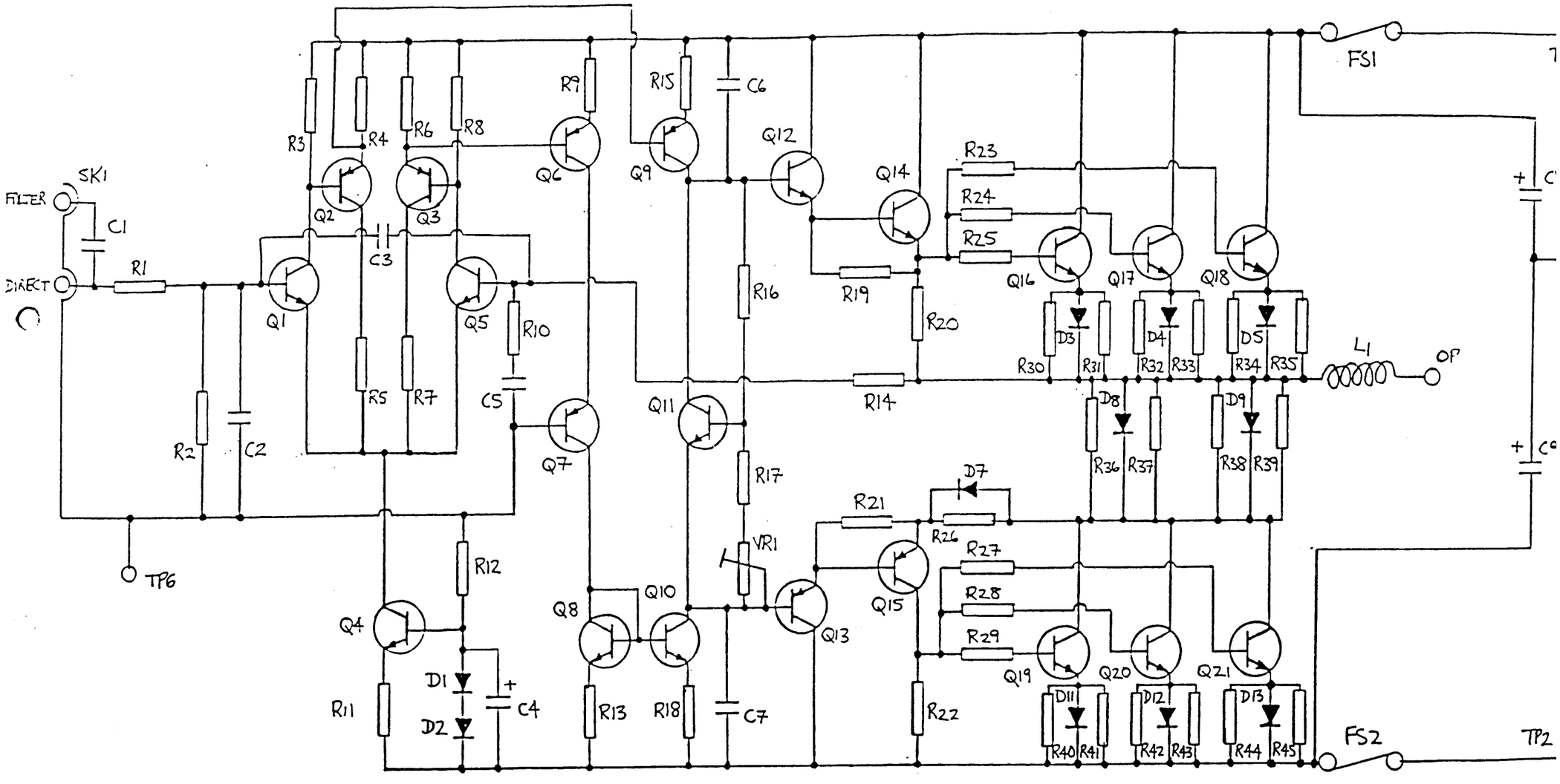

119050 POWER AMPLIFIER

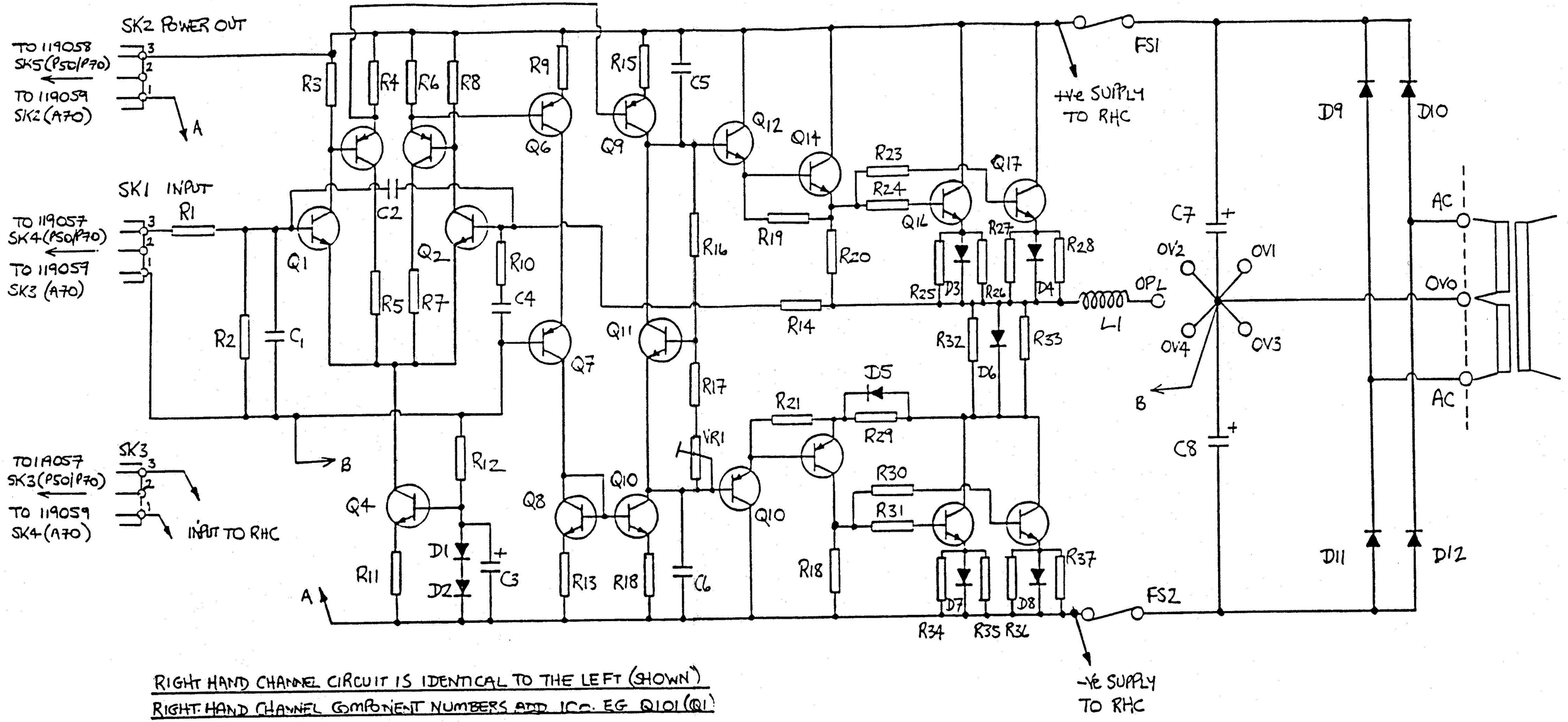

RIGHT HAND CHANNEL CIRCUIT IS IDENTICAL TO THE LEFT (SHOWN)
RIGHT HAND CHANNEL COMPONENT NUMBERS ADD 100. EG Q101 (Q1)

119055 POWER AMPLIFIER

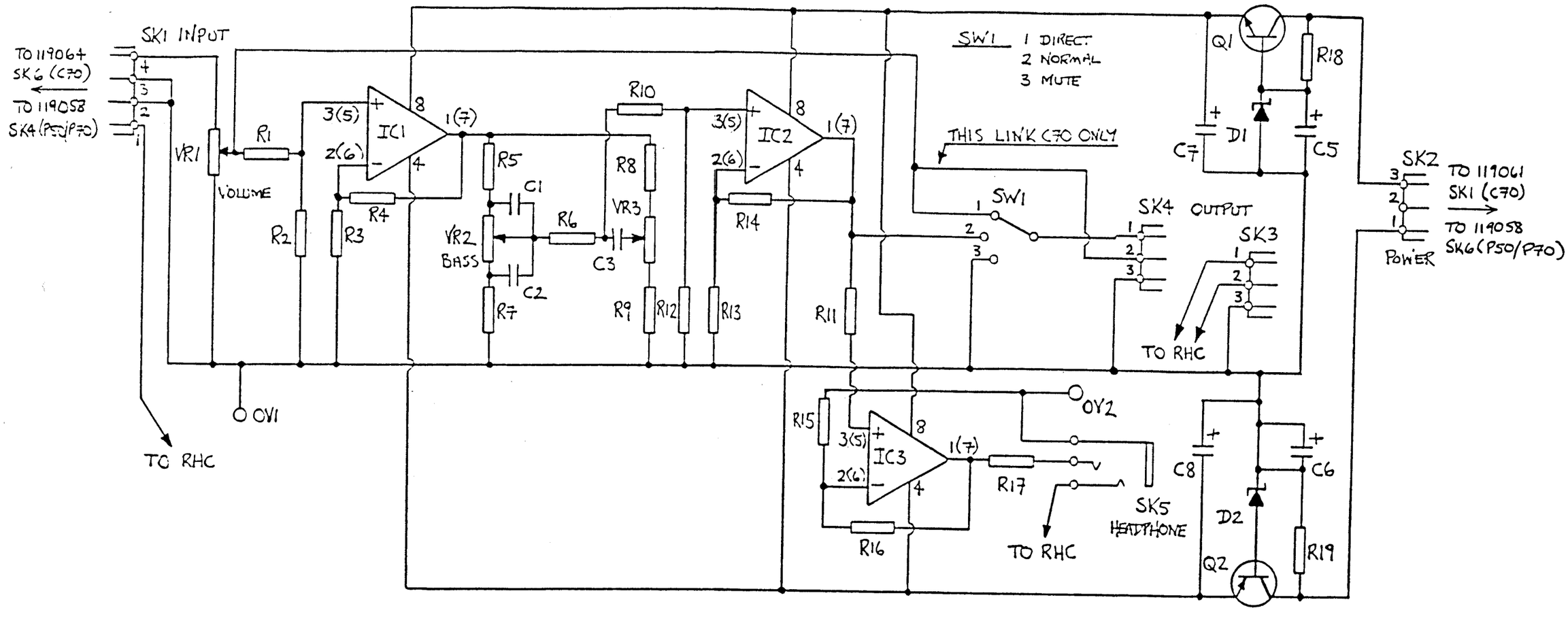

RIGHT HAND CHANNEL CIRCUIT IS IDENTICAL TO THE LEFT (SHOWN)
RIGHT HAND CHANNEL COMPONENT NUMBERS ADD 100 EG R101 (R1)

119057 TONE AMPLIFIER.

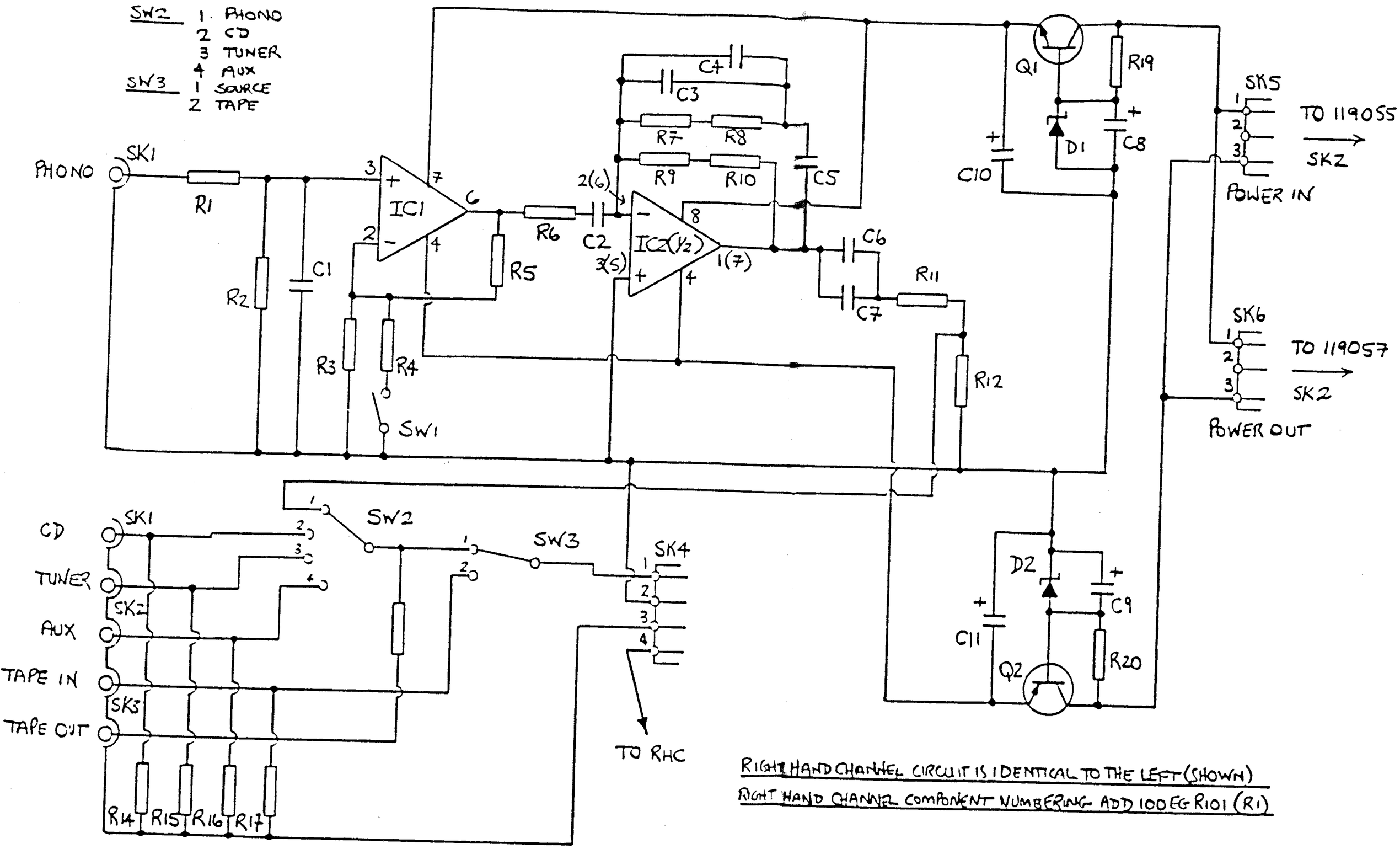

RIGHT HAND CHANNEL CIRCUIT IS IDENTICAL TO THE LEFT (SHOWN)
RIGHT HAND CHANNEL COMPONENT NUMBERING ADD 100 EG R101 (R1)

119058 EQ/INPUT BOARD

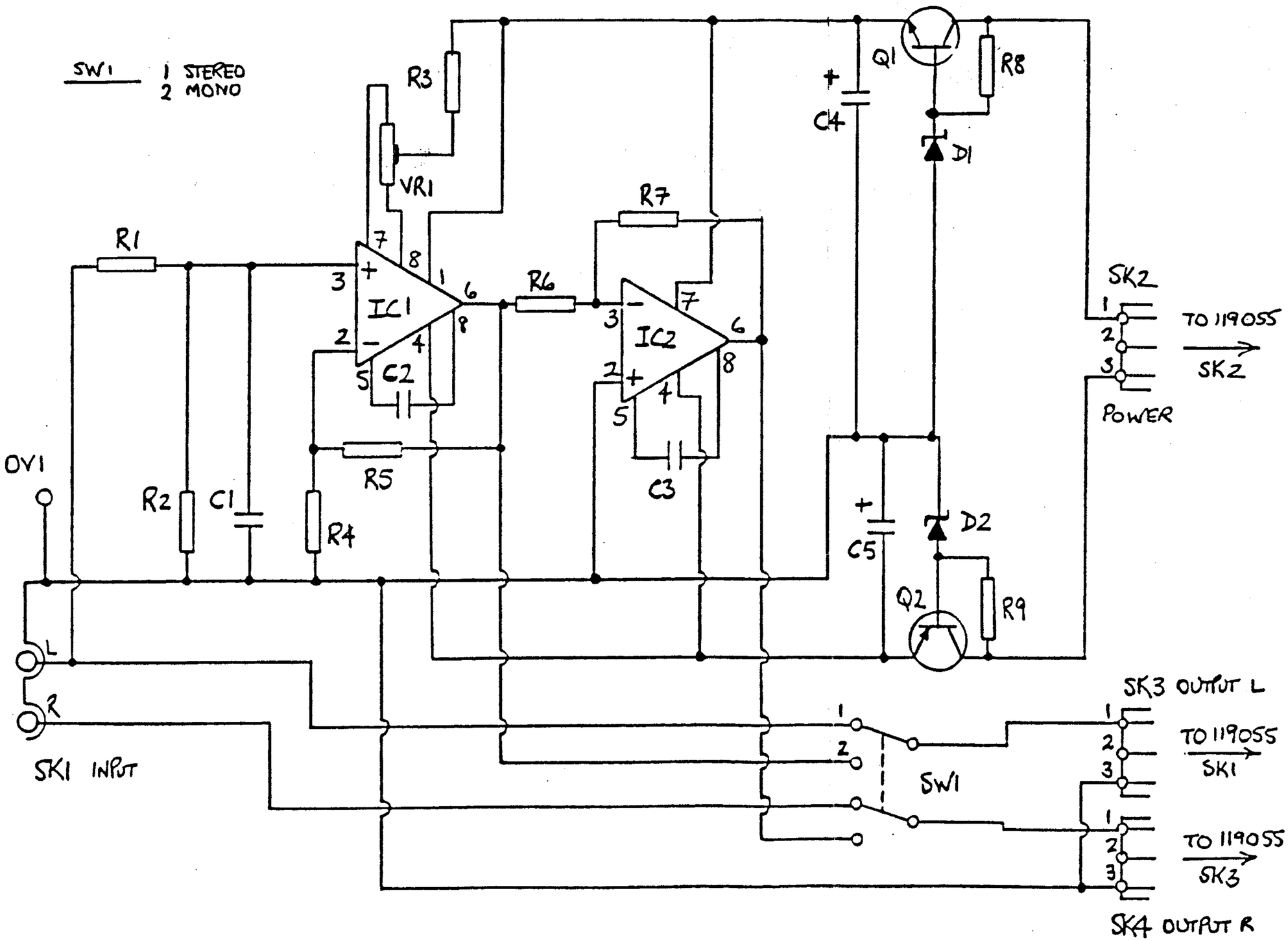

119059 INVERTER BOARD

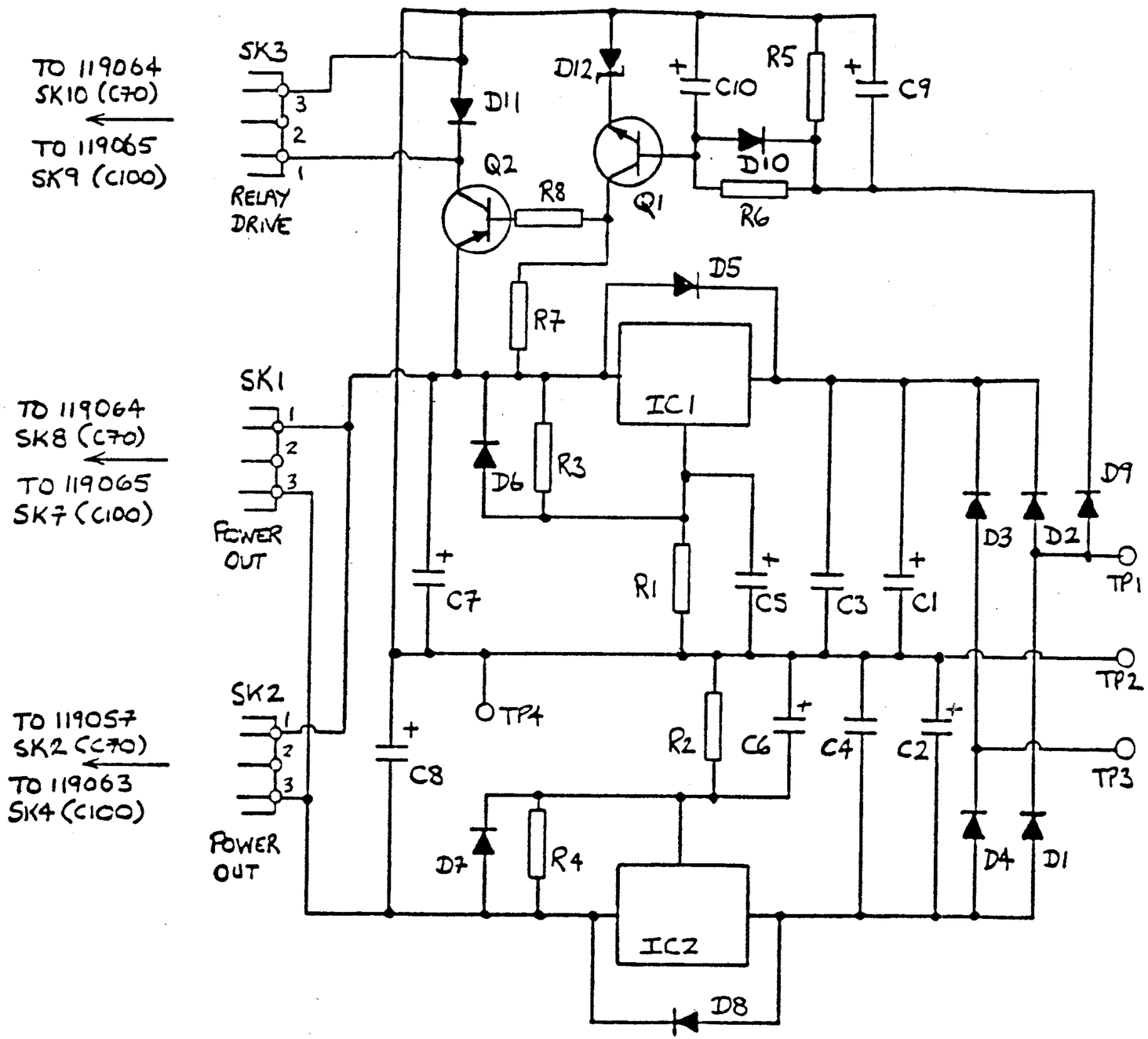

119061 POWER SUPPLY BOARD

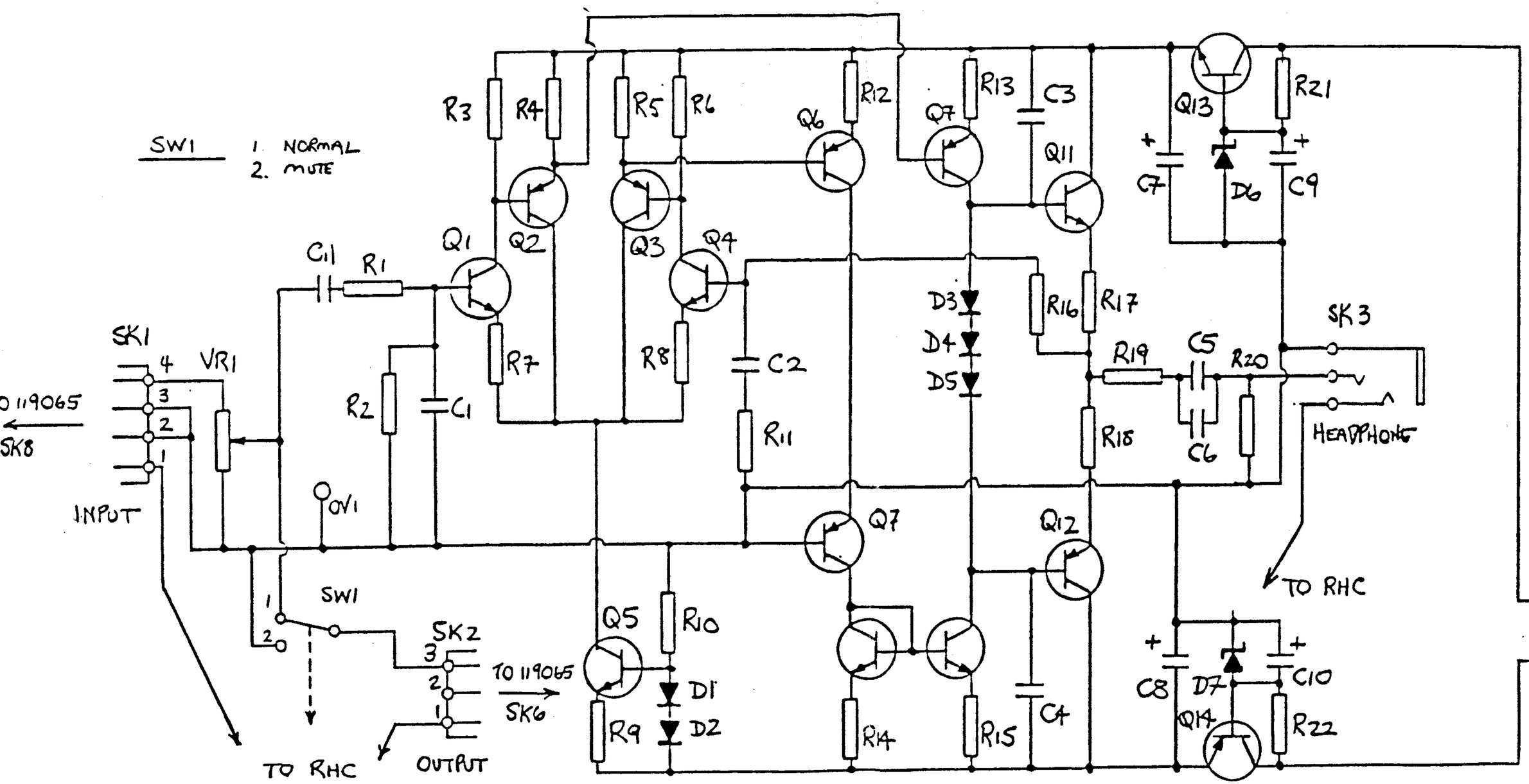

RIGHT HAND CHANNEL CIRCUIT IS IDENTICAL TO THE LEFT (SHOWN)
RIGHT HAND CHANNEL COMPONENT NUMBERS ADD 100 EG R101 (R1)

119063 HEADPHONE AMPLIFIER

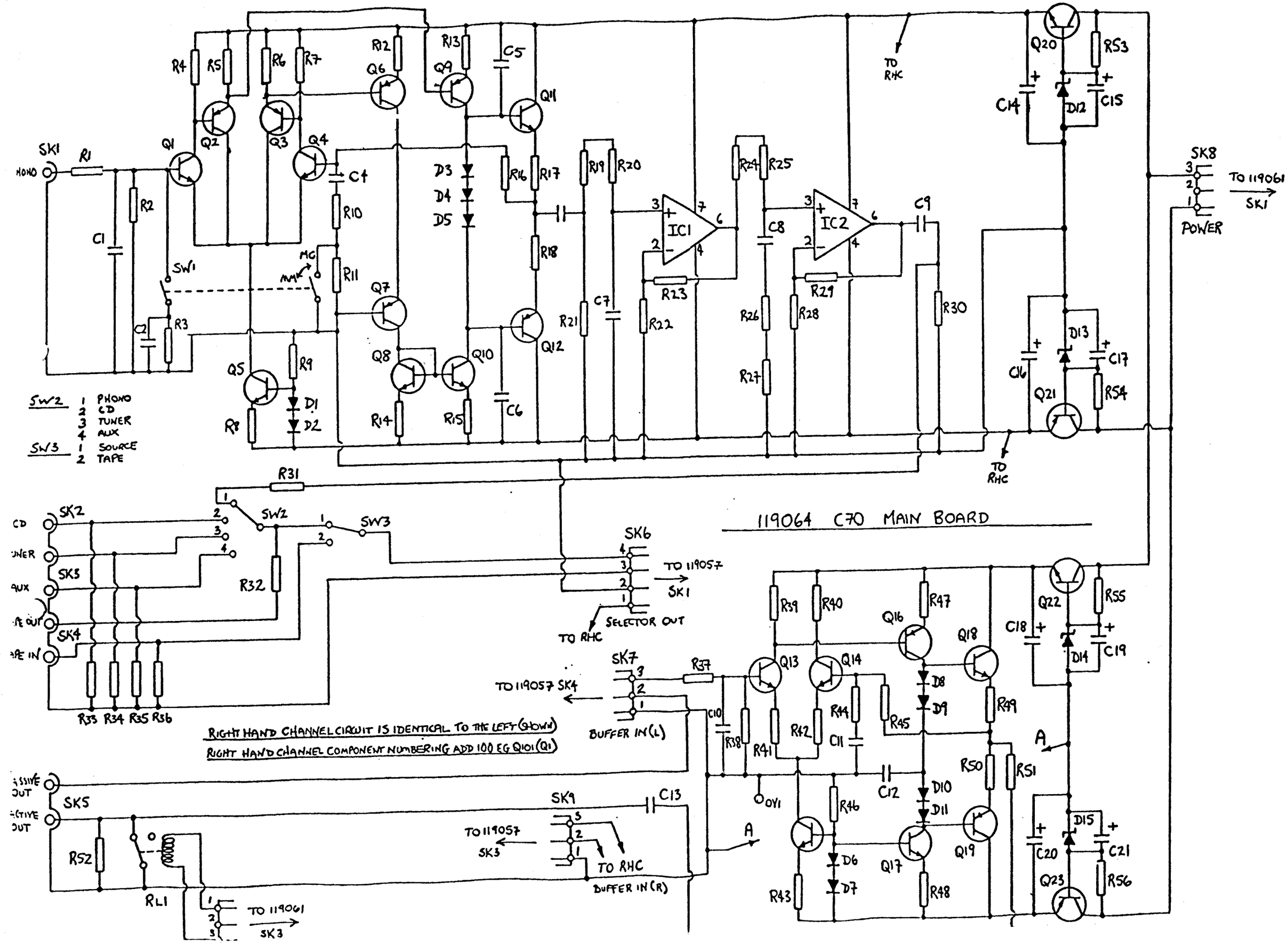
119064 C70 MAIN BOARD
SW2 1 PHONO 2 CD 3 TUNER 4 AUX
SW3 1 SOURCE 2 TAPE
RIGHT HAND CHANNEL CIRCUIT IS IDENTICAL TO THE LEFT (SHOWN)
RIGHT HAND CHANNEL COMPONENT NUMBERING ADD 100 EG Q101 (Q1)
TO RHC
TO 119061 SK1
TO 119061 SK3
TO 119057 SK1
TO 119057 SK4
TO 119057 SK3
SELECTOR OUT
BUFFER IN (L)
BUFFER IN (R)
POWER
MONO
CD
TUNER
AUX
TAPE OUT
TAPE IN
PASSIVE OUT
ACTIVE OUT
MC
MM

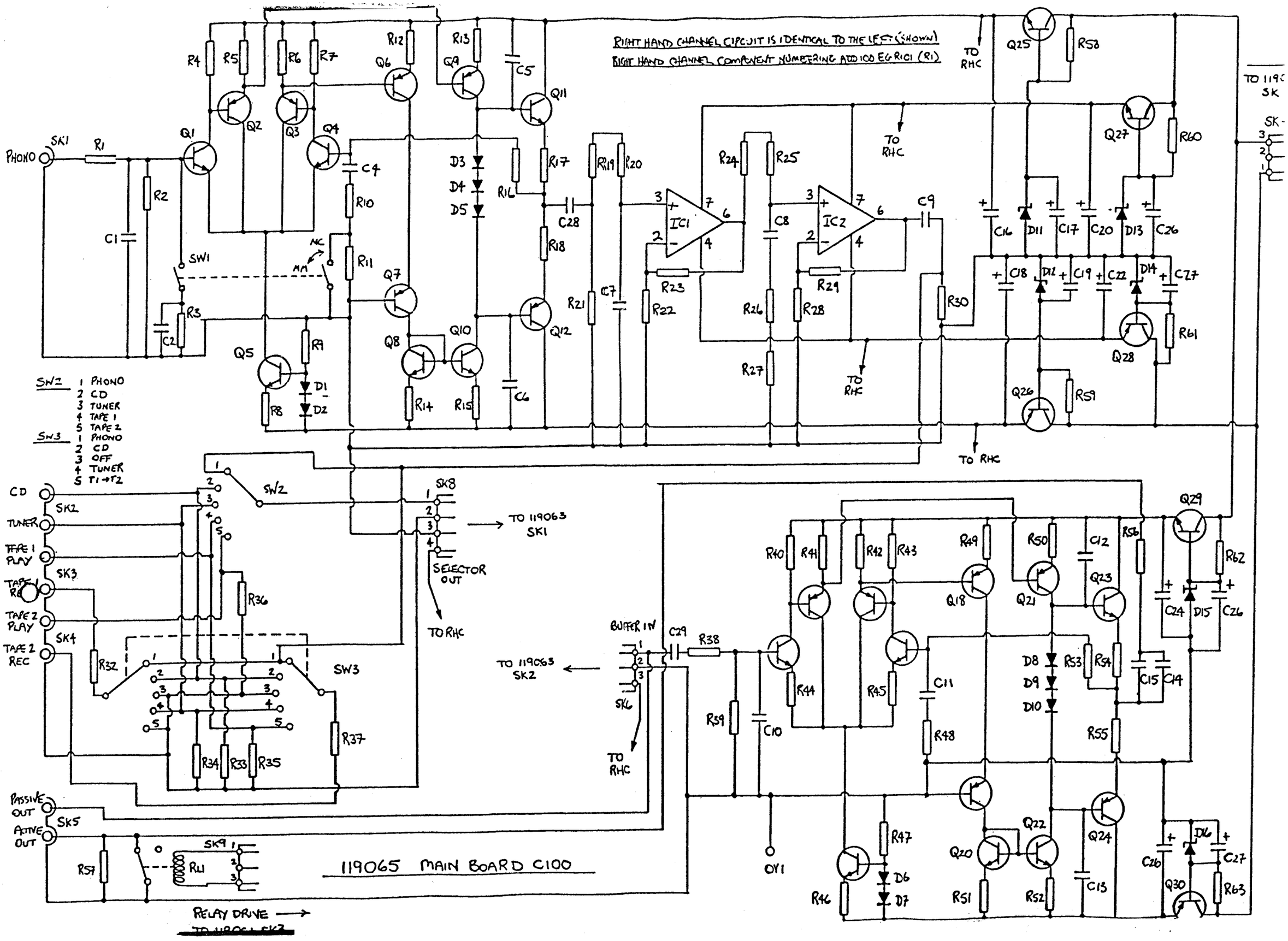
RIGHT HAND CHANNEL CIRCUIT IS IDENTICAL TO THE LEFT (SHOWN)
RIGHT HAND CHANNEL COMPONENT NUMBERING ADD 100 EG R101 (R1)
PHONO
SK1
SW1
MC
MM
IC1
IC2
TO RHC
TO 119063 SK1
TO 119063 SK2
SELECTOR OUT
BUFFER IN
SW2
SW3
SK2
SK3
SK4
SK5
SK6
SK8
SK9
CD
TUNER
TAPE 1 PLAY
TAPE 1 REC
TAPE 2 PLAY
TAPE 2 REC
PASSIVE OUT
ACTIVE OUT
SW2 1 PHONO 2 CD 3 TUNER 4 TAPE 1 5 TAPE 2
SW3 1 PHONO 2 CD 3 OFF 4 TUNER 5 T1→T2
RELAY DRIVE
119065 MAIN BOARD C100