thecarversite.com

CARVER

DIGITAL TIME LENS
COMPACT DISC CHANGER TLM-3600

SERVICE MANUAL

CONTENTS

SPECIFICATIONS

Frequency Response:	5Hz-20kHz	Quantization:	18 bits
S/N Ratio:	100dB nominal	Optical Pick-Up:	3-beam 790nm laser
Channels Separation:	90dB nominal @1kHz	Power Supply:	120V, 60Hz
Distortion:	Less than 0.015% @1kHz	Power Consumption:	15W
Wow and Flutter:	below measurable limits	Dimensions	4.57 ″ H × 19 ″ W × 13.27 ″D
Output:	1.8V/1k ohm	Weight:	11 lbs., 14 oz.
Sampling Frequency:	352.8kHz (8Xoversampling)		

Specifications are subject to change without notice.

LASER BEAM INFORMATION

A pick-up that emits a laser beam is used in this compact disc player.

CAUTION— USE OF CONTROLS OR ADJUSTMENTS OR PERFORMANCE OF PROCEDURES OTHER THAN THOSE SPECIFIED HEREIN MAY RESULT IN HAZARDOUS RADIATION EXPOSURE

LASER OUTPUT 1.0 mW Max. (CW)

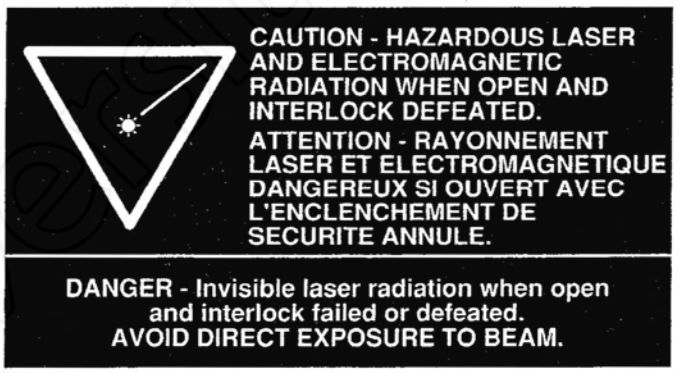

a. CONDITIONS FOR LASER BEAM EMISSION FROM THE PICK-UP

The conditions for laser beam emission from the pick-up are the satisfaction of all two of the following points.

(a) A magazine must be installed.
(b) The operation button must have been pressed, the tray must have been put out from the magazine, and chucking must have been completed.

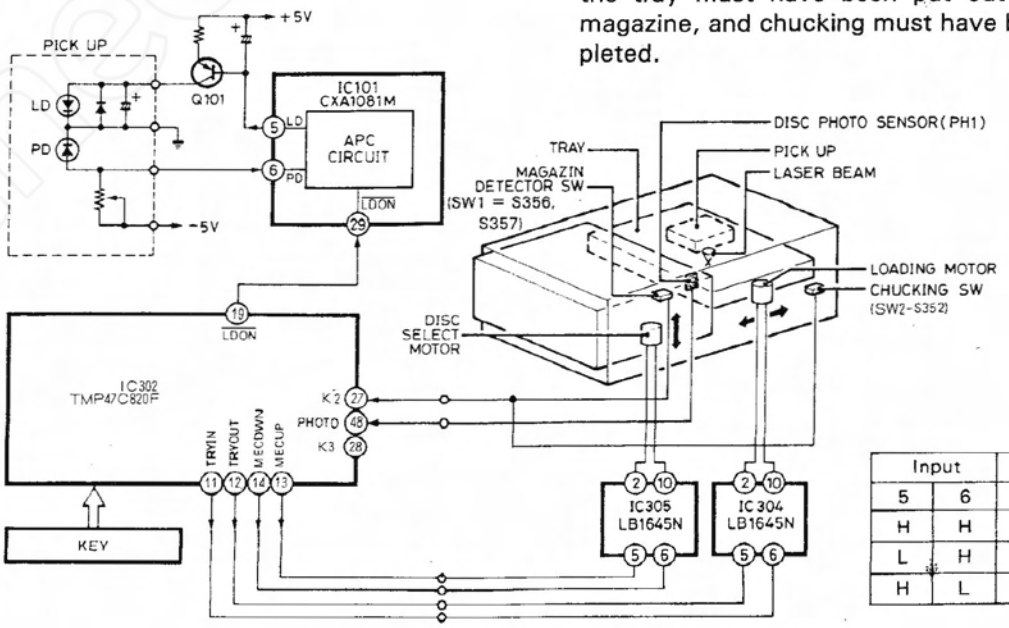

Input		Output	
5	6	2	10
H	H	L	L
L	H	L	H
H	L	H	L

LASER BEAM INFORMATION

Operation Explanations

The operation sequence from magazine installation to laser beam output is explained below.

(1) When a magazine is installed with inserted power plug and the power switch (S901) set to ON, S356,357 becomes ON, and IC302 detects that a magazine has been installed.

(2) When an operation button (PLAY/PAUSE, INTRO-SCAN, RANDOM PLAY) is pressed, this is detected by IC302, MECUP = "L", MECDWN = "H" is obtained, and ② = "L", ⑩ = "H" is reached for IC305. Then the disc selection motor runs and the mechanism assembly rises.

(3) Passage of the gear slot is detected by PH1 with PHOTO = "L" during rise of the mechanism assembly, and as the position of the first disc is reached when this has occurred twice, MECUP = MECDWN = "H" is obtained, ② = ⑩ = "L" is reached for IC305, and the disc selection motor and the mechanism assembly stop.
(If the disc selection key is pressed before step (2), the mechanism assembly moves to that position.)

(4) Next, TRYIN = "H" and TRYOUT = "L" is obtained for IC302. Then ② = "L" and ⑩ = "H" is put out by IC304, the loading motor runs, and the tray is pulled out from the magazine.

(5) When the tray has been pulled out from a magazine completely and chucking has been completed, S353 becomes ON. When this is detected, TRYIN = TRYOUT = "H" is reached, ② = ⑩ = "L" is reached for IC304, and the loading motor and the loading mechanism stop.

(6) Next, LDON = "L" is reached by IC302. Then the APC circuit of IC101 operates, power is supplied to LD from Q101, and a laser beam is emitted.

Protection Operation

(1) After completion of play and before the tray is stored in the magazine, LDON = "H" is reached by IC302, and the LD laser output is stopped.

(2) After item (6) of the above operation explanation, IC302 reaches LDON = "H" after several seconds if it is detected that there is no disc on the tray.

LASER BEAM DESCRIPTION AND HANDLING OF MAIN PARTS

PICK-UP HANDLING, REPLACEMENT AND SERVICE NOTES

- Preparations

The compact-disc player incorporates a great many ICs and LSIs, as well as the pick-up (laser diode).
Because these components are extremely sensitive to static electricity and therefore can be damaged by a high-voltage concentration of static electricity, the greatest care is necessary for their handing. In addition, many high-precision components, such as the lens, are used in the pick-up.

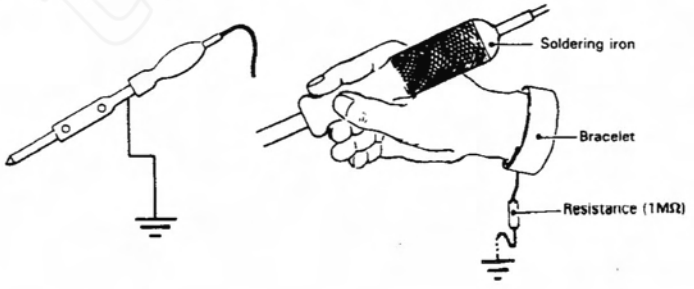

(1) The compact-disc player and its components must never be repaired or stored in places where the temperature or humidity is high, in places where there is a strong magnetic field, or where there is excessive dust.

(2) Before making any replacement of a component, first disconnect the power cord's plug from the electrical outlet.

(3) All equipment, measuring instruments and other tools must be grounded.

(4) The workbench must be covered by a conductive sheet and grounded.

(5) In order to prevent AC leakage from a soldering iron, metallic tools must be grounded.

(6) Workers must be grounded.

(7) The laser beam from the pick-up must never be permitted to enter the eyes directly, and should not be allowed to contact the skin.

LASER BEAM DESCRIPTION AND HANDLING OF MAIN PARTS

(a) Unpacking
In order to prevent damage by static electricity during shipment, the pick–up is packed in a special conductive bag. The pick–up should be left in this bag until immediately prior to use.

Storage in :conductive bag

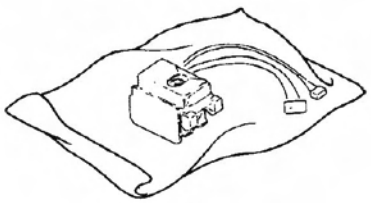

Avoid impact shocks.

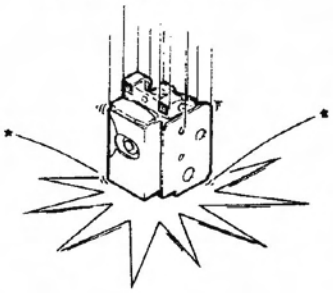

(b) Magnetic fields
A powerful magnet is used in the pick–up. Take care not to bring magnetic materials nearby.

(c) Places that must not be touched
- Pick–up lens
- Pick–up screws
- Printed–circuit board pattern

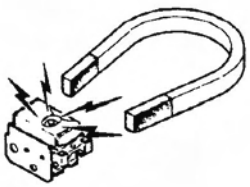

Your eyes can be injured if the laser beam is allowed to enter them.
Take the greatest care to absolutely avoid eye contact with the laser beam!
Never switch ON the power to a pick–up if its laser output port (object lens, etc.) is damaged.
Never look directly at the laser beam, and do not allow the beam to contact your skin.

Cleaning the lens surface

If dust gets on the lens surface
Use an air brush (such as used for cleaning a camera lens) to blow away the dust.
The lens is held by a support spring.
If the lens surface becomes dirty, use a soft cotton swab or similar tool dampened with isopropyl alcohol to clean it, taking care not to apply excessive force and damage the lens's support spring.

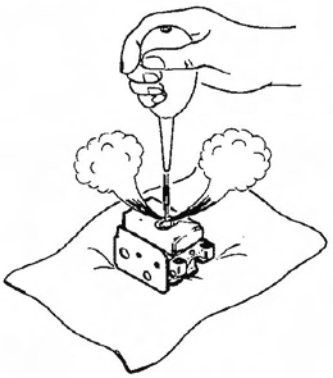

Never attempt to disassemble the lens.

DISASSEMBLY

FRONT PANEL REMOVAL

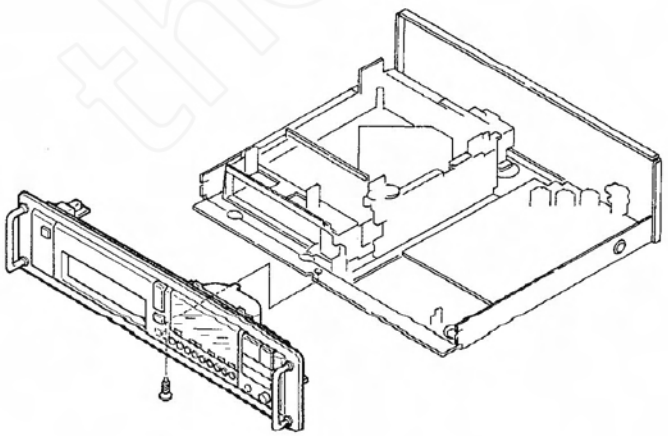

MECHANISM REMOVAL

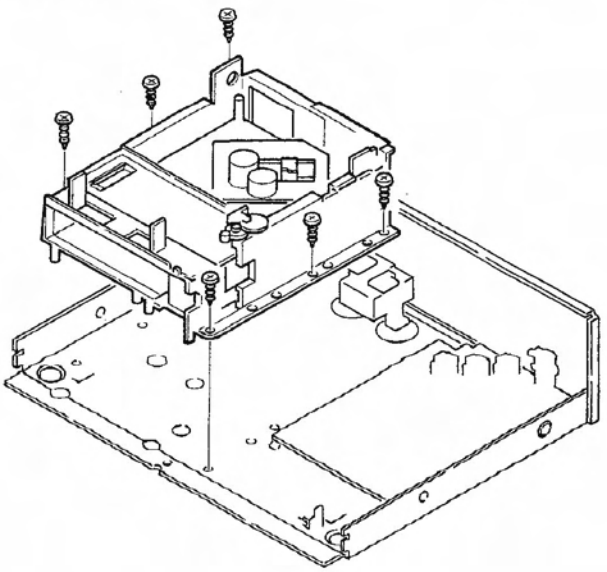

CD PLAYER ADJUSTMENTS

a. MECHANISM ADJUSTMENT

- Note that the mechanism of the compact-disc player is very delicate.
- It is very important that the spindle motor (which rotates the disc), and the sled motor (which causes the disc signals to be tracked), as well as the gear and other components, operate smoothly, without eccentricity.
- When handling the pick-up, take care not to exert excessive force, and particular care should be taken not to touch the lens or the drive circuit's printed-circuit board pattern.

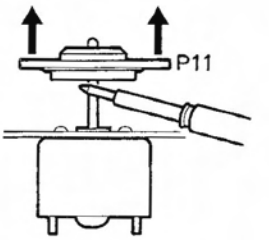

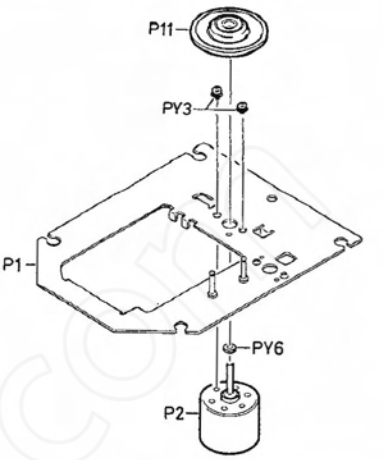

(a) Replacement of the spindle motor

- First, prepare the new turntable and new special washer for replacement.
  The removed turntable will be deformed by the heat of the soldering iron, and cannot be reused.
- Prepare dial-type calipers.

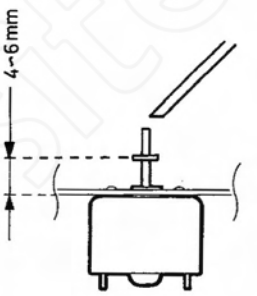

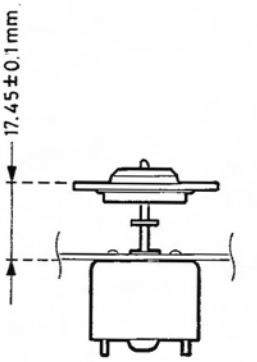

(1) The attached bonding material can be dissolved by using a 60W soldering iron to heat the shaft at the lower part of the turntable (P11) for about one minute.
(2) The turntable can then be removed from the shaft by very carefully applying force upward at the center of the lower surface of the turntable.
(3) Remove the two screws (PY3) and remove the spindle motor (P2)
(4) Attach the special washer (PY6) to the spindle motor.
(5) Apply a small amount of a mixture of the "Three Bond 2001" and "2105F" bonding materials to the motor's shaft.
(6) Install the turntable as shown in the figure.
(7) Secure the turntable by pressing gently.
Be sure to wipe away (by using a piece of cloth, or similar material) any bonding material coming out of the hole.

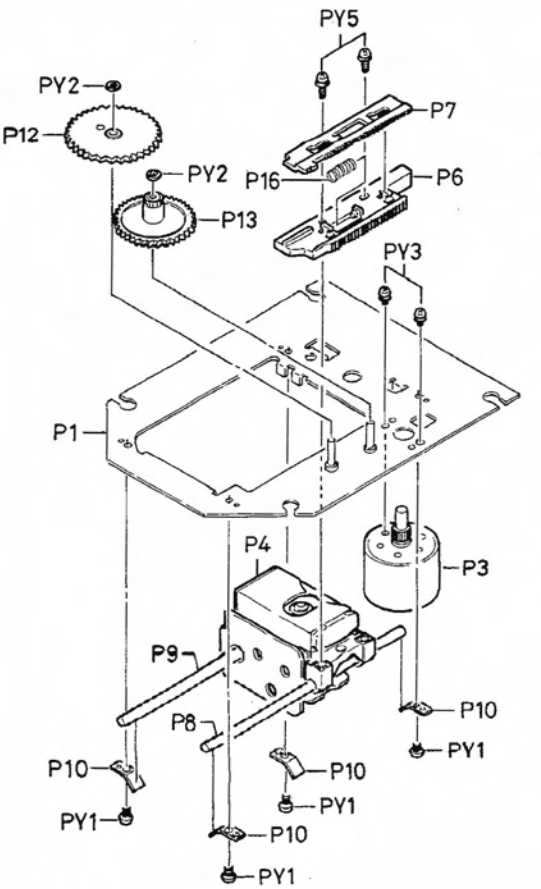

(b) Replacement and lubrication of the pick-up

(1) Before replacement of the pick-up, be sure to carefully read the section regarding the pick-up when the unit is moved or transported.
(2) Remove the four screws (PY1) holding the spring plate (P10), and then take out with the shafts (P9 and P8) still attached.
(3) If the pick-up is reconditioned or replaced, be sure to wipe the rails clean and also apply a coating of FLOIL (G-474B) to their entire circumference and entire length.
(4) After replacement, install the shaft as before, and tighten the four screws (PY1) for the spring plates (P10).

(BE SURE, AT THIS TIME, NOT TO TOUCH ANY OTHER PART.)

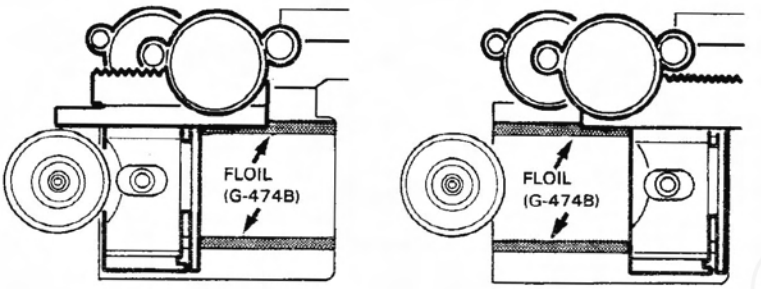

(c) Checking the operation of the CD mechanism

(1) Disconnect the socket (for the sled motor power supply) from the printed-circuit board.

(2) Apply a voltage of DC1.7V to the sled motor's terminal.

(3) Measure the current during sled motor operation.
The direction of movement of the pick-up (outer groove or inner groove) can be changed by changing the battery polarity.

(4) The current during sled motor operation varies according to the positional relationship of the pick-up activator gear (P6) and the gear (P12).
If the current is equivalent to or exceeds the value shown in the table, tighten the screws (PY5) so the installation position of the gear (P6) moves slightly.
(If the current exceeds 34 mA, slightly increase the distance between the screws (PY5) and the gear (P12).)

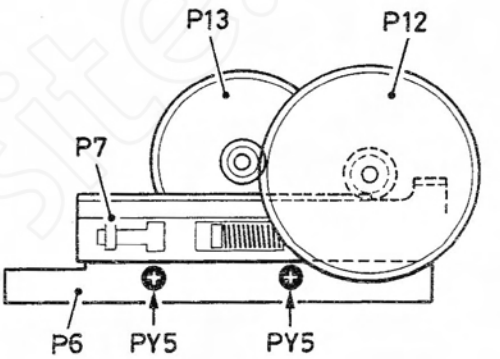

Direction of pick-up movement	Sled motor current
Outer groove	34 mA or less
Inner groove	34 mA or less

b. RESETTING THE PICK-UP TO THE HOME POSITION

(a) The limit switch is switched ON by the projection of the rack gear secured to the returned pick-up, after which the sled motor continues to operate (by the circuit) for approximately 30 milliseconds; there is then again a reverse operation, and movement to the position at which the switch is switched OFF.

Rotation continues for about 30 milliseconds after the switch is switched OFF, and then the pick-up stops at home position.

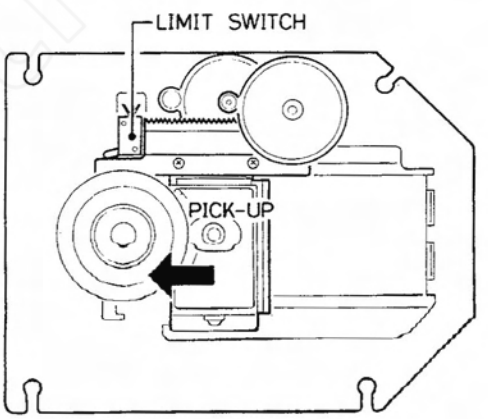

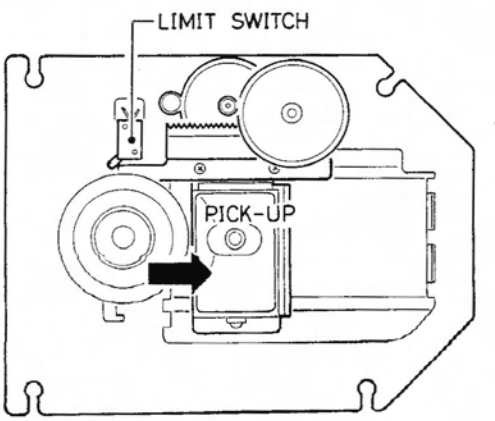

CD PLAYER ADJUSTMENTS

a. PREPARATION FOR ADJUSTMENTS

(a) Measuring instruments, tools and filter

(1) Test disc No.1 F30L-50146 (Poly Gram) etc.
No.2 YEDS-7 (Sony)

(2) Oscilloscope : SS5711 (10 MHz or dual phenomenon) or, Memoryscope : DSS6521 (Storagescope)

(3) Automatic distortion analyzer 725 (Shiba soku) or AC voltmeter (−80dB, input impedance 1MΩ or more)

(4) AF-oscillator (400Hz, 500mV RMS)

(5) Frequency counter (5 MHz; or more)

(6) Screwdrivers (non-metalic) for adjustments.

(7) Band pass filter

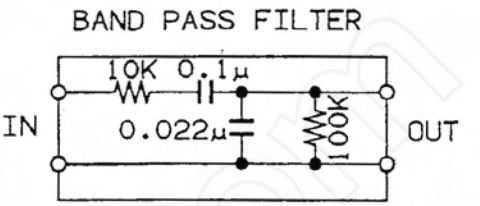

b. PARTS LOCATION

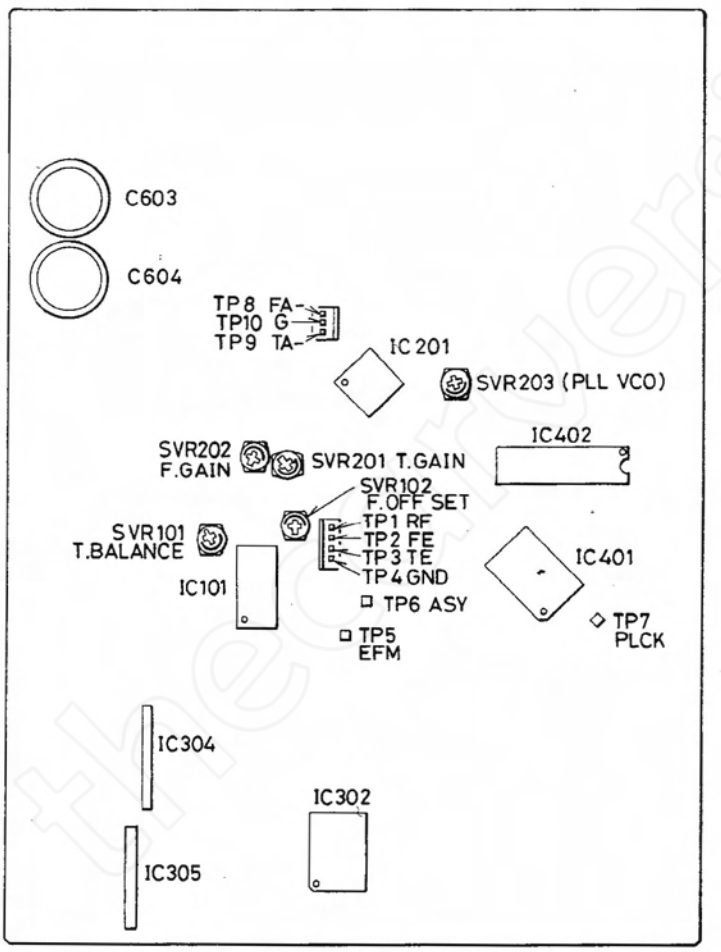

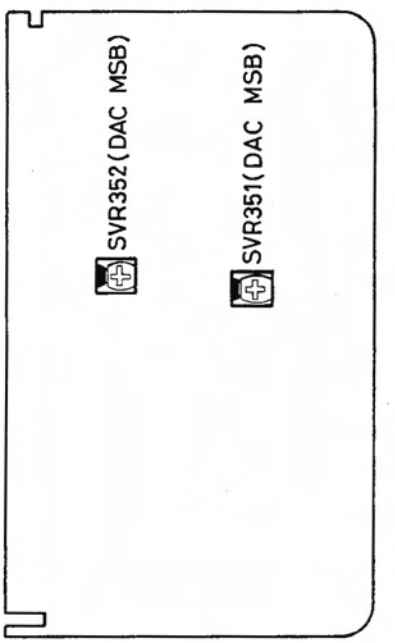

NOTE: 1. All measurements are referred to TP 4 (GND).
2. Adjust SVR101, SVR102, SVR201 ~SVR203, SVR351 and SVR352 are initial setting position, as shown in the illustration.
3. DTL Button : OFF position.

c. ADJUSTMENTS

Adjustment Item	Test disc	Measuring instrument	Input connection	Output connection	Adjustment location	Adjustment value
(a) PLL VCO free-run adjustment	.....	Frequency counter	.....	TP 7 (PLCK) TP4 (GND)	SVR203	4.55 MHz (± 0.05MHz)
(b) Tracking balance adjustment	No.1	Oscilloscope	.....	TP 3 (TE) TP 4 (GND)	SVR101	Waveform symmetrical referred to 0V.
(c) Focus offset adjustment		Oscilloscope Band pass filter	.....	TP 2 (FE) TP 4 (GND)	SVR102	Voltage during PLAY and voltage during STOP = same voltage value
(d) Focus gain adjustment		Memory scope Oscilloscope Oscillator Band pass filter	TP 8 (FA) TP 4 (GND)	TP 2 (FE) TP 4 (GND)	SVR202	230m Vp-p
(e) Tracking gain adjustment			TP 9 (TA) TP 4 (GND)	TP 3 (TE) TP 4 (GND)	SVR201	230m Vp-p
(f) MSB adjustment for D/A converter	No. 2 Track No. 21 −80dB	Oscilloscope AC Digital voltmeter	.....	LINE OUT	SVR352 (L-ch) SVR351 (R-ch)	−79.5dB (±0.5dB)
(g) Checking the eye pattern	No.1	Oscilloscope	.....	TP 1 (RF) TP 4 (GND)	.....	" Eye " pattern.

(a) PLL VCO free-run adjustment

(1) Connect a frequency counter to TP7 (PLCK).
(2) Switch ON the unit's power.
(3) Set the player to STOP mode.
(4) Short TP4 (GND) and TP6 (ASY) electrically.
(5) Adjust SVR203 (PLL) until the VCO frequency on TP7 is 4.55 MHz (±0.05MHz)
(6) Disconnect TP4 and TP6.

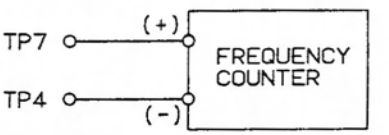

(b) Tracking balance adjustment.

(1) Connect an oscilloscope to TP3 (TE).
(2) Play the test disc.
(3) Push the FORWARD SEARCH button.
(4) Keep the button pushed and adjust SVR101 (T. Balance) until the track-jump TE-waves on TP3 are symmetrical referred to 0V.

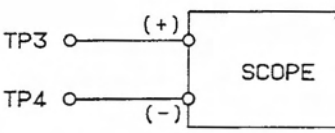

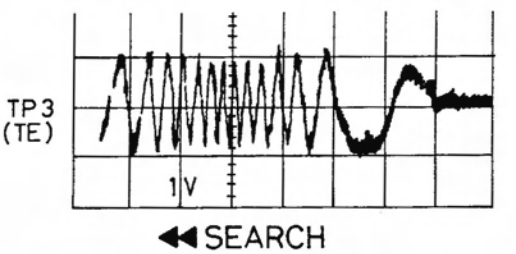

(c) Focus offset adjustment

(1) Connect an oscilloscope via the band-pass filter to TP2 (FE).
(2) Play the test disc.
(3) Record the DC offset voltage read-out at this time.
(4) PRESS STOP.
(5) Adjust SVR102 so that the oscilloscope voltage reading is the same as the value measured at step (3) above.

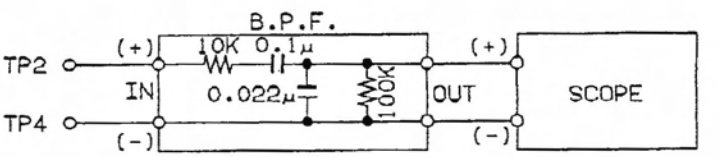

(d) Focus gain adjustment

(1) Connect an oscilloscope via the band-pass filter to TP2 (FE).
(2) Play the test disc.
(3) Connect an AF-oscillator via a 270k ohm resistor to TP8 (FG).
Frequency = 400Hz, amplitude = 500 mV RMS.
(4) Adjust SVR202(F. Gain) until the average 400 Hz FE-signal amplitude on TP2, measured through the band-pass filter, is 230m Vp-p.

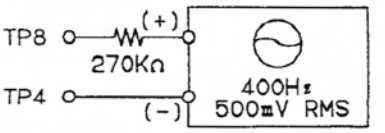

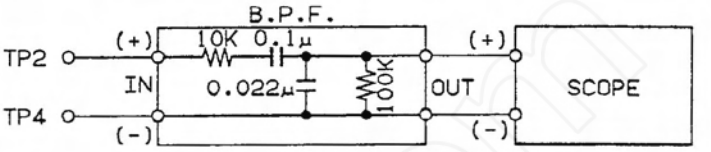

(e) Tracking gain adjustment

(1) Connect an oscilloscope via the band-pass filter to TP3 (TE).
(2) Play the test disc.
(3) Connect an AF-oscillator via a 1.2M ohm resistor to TP9 (TG).
Frequency = 400Hz, amplitude = 500 mV RMS.
(4) Adjust SVR201(T. Gain) until the average 400 Hz TE-signal amplitude on TP3, measured through the band-pass filter, is 230m Vp-p.

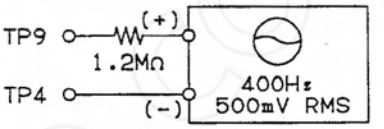

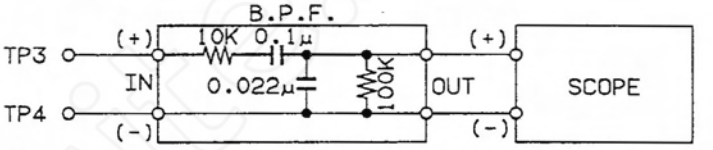

(f) MSB Adjustment for D/A converter

(1) Connect a automatic distortion analyzer to LINE OUT socket.
(2) Play the trach No. 21 (−80 dB) of the test disc 2.
(3) Adjust SVR352 (L-CH) or SVR351 (R-CH) until the AC-voltage on LINE OUT is −79.5dB.

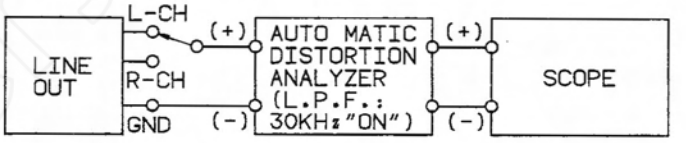

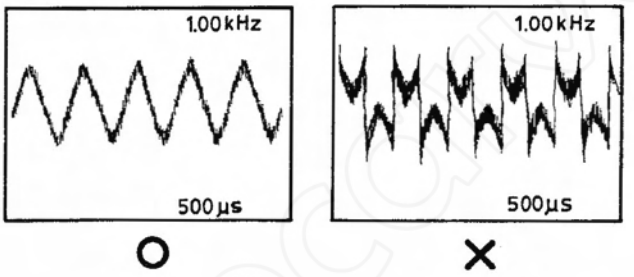

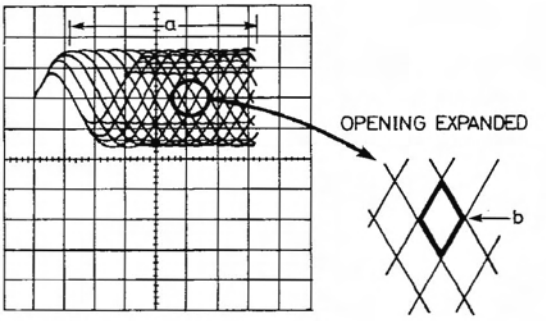

(g) Checking the eye pattern

The adjustments (a)-(f) complete the adjustments of the compact-disc player.
Next, check the eye pattern wavetorm.

Measuring instrument	Test disc	Output connection point	" Eye " pattern
Oscilloscope	1	TP1 ((RF) TP4 (GND)	• Check to be sure that the " eye " pattern is at the center of the waveform and that the diamond shape is clearly defined.

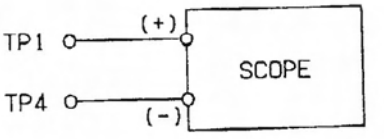

EXPLODED VIEW (CABINET & CHASSIS)

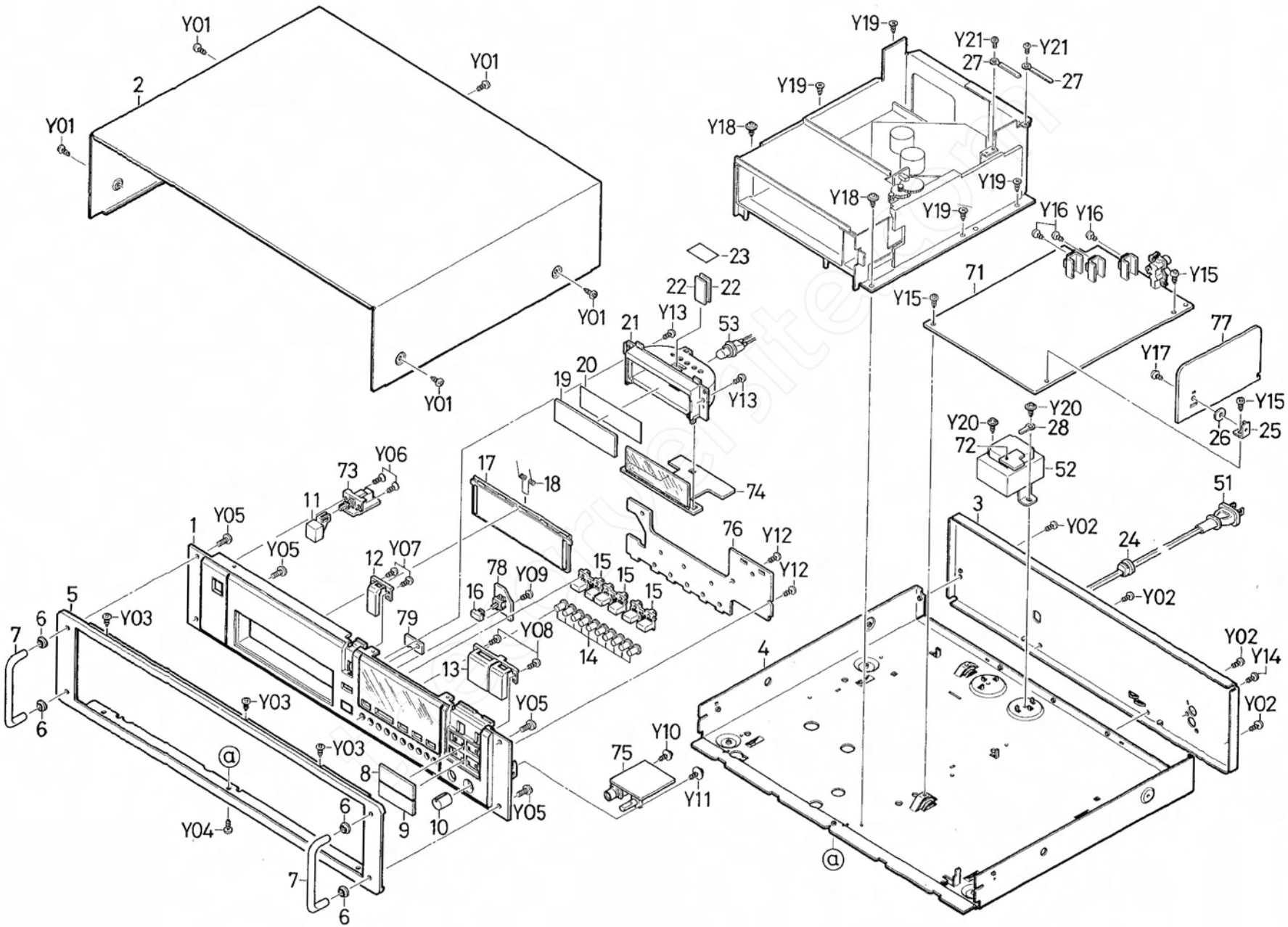

PARTS LIST

PRODUCT SAFETY NOTICE

Each precaution in this manual should be followed during servicing. Components identified with the IEC symbol ⚠ in the parts list and the schematic diagram designate components in which safety can be of special significance. When replacing a component identified with ⚠, use only the replacement parts designated, or parts with the same ratings of resistance, wattage or voltage that are designated in the parts list in this manual.
Leakage-current or resistance measurements must be made to determine that exposed parts are acceptably insulated from the supply circuit before returning the product to the customer.

CAUTION : Regular type resistors and capacitors are not listed. To know those values, refer to the schematic diagram.

PACKING & ACCESSORIES

Ref. No.	Part No.	Description
	614 216 5690	INNER CARTON
	614 216 5706	PAD, TOP
	614 216 5713	PAD, BOTTOM
	614 176 9684	INNER POLYE LAMINA COVER, 550X650MM, SET
	614 216 5720	INSTRUCTION MANUAL
	⚠ 614 022 7598	LEAD CORD, LINE
or	⚠ 614 022 9554	LEAD CORD, LINE
or	⚠ 614 023 0567	LEAD CORD, LINE
or	⚠ 614 216 6833	LEAD CORD, LINE

CABINET & CHASSIS

Ref. No.	Part No.	Description
1	614 216 5430	ASSY, PANEL, FRONT
2	614 216 5416	ASSY, CABINET
3	614 216 5744	BACK LID
4	614 203 4200	BOTTOM LID ASSY
5	614 216 5478	DECORATION
6	614 216 5461	RING
7	614 216 5621	HANDLE, FRONT
8	614 216 5553	BUTTON, SKIP (+,-)
9	614 217 9284	BUTTON, SEARCH
10	614 194 4494	ROTARY KNOB, PHONES LEVEL
11	614 216 5614	BUTTON, POWER
12	614 216 5591	BUTTON, EJECT
13	614 216 5539	BUTTON, PLAY/PAUSE/STOP
14	614 216 5584	BUTTON, DISC SELECTION KEYS
15	614 216 5577	BUTTON, MEMORY/CLEAR/DISPLAY
16	614 216 5607	BUTTON, DTL
17	614 216 5737	COMPARTMENT LID ASSY
18	614 200 1851	SPRING COIL, COMPARTMENT LID
19	614 200 1455	SIGN WINDOW, LCD
20	614 216 5782	SHEET, LCD
21	614 200 1820	REFLECTOR, LCD
22	614 216 5645	FILTER, LCD
23	614 112 0485	SHEET, 30X20X0.1MM
24	614 129 1901	FIXER, POWER CORD
25	614 114 7185	BRACKET, DTL P.C.BOARD
26	411 092 2900	WASHER Z 3X10X1MM, DTL P.C.BOARD
27	614 129 9136	LUG, MECHANISM LEAD MTG.
28	614 051 9785	LUG, GROUND, POWER TRANSFORMER MTG.

FIXING PARTS

Ref. No.	Part No.	Description
Y01	411 021 6603	SCR S-TPG BIN 3X8MM, CABINET
Y02	412 004 2902	SPECIAL SCREW 3X8MM, BACK LID
Y03	411 021 6405	SCR S-TPG BIN 3X8MM, DECORATION PANEL
Y04	411 021 6405	SCR S-TPG BIN 3X8MM, FRONT PANEL, BOTTOM
Y05	411 001 2700	SCR S-TPG BIN 4X12MM, HANDLE
Y06	411 022 4608	SCR S-TPG FLT 3X8MM, POWER SWITCH
Y07	411 021 6405	SCR S-TPG BIN 3X8MM, EJECT BUTTON
Y08	411 021 6405	SCR S-TPG BIN 3X8MM, PLAY/PAUSE/STOP
Y09	411 021 6405	SCR S-TPG BIN 3X8MM, DTL BUTTON
Y10	411 020 9902	SCR S-TPG BRZ + FLG 3X8MM, PHONES
Y11	412 003 1807	SPECIAL SCREW, PHONES
Y12	411 021 6405	SCR S-TPG BIN 3X8MM, SWITCH P.C.BOARD
Y13	411 021 6405	SCR S-TPG BIN 3X8MM, REFLECTOR
Y14	412 004 2902	SPECIAL SCREW 3X8MM, LINE OUT
Y15	411 021 6405	SCR S-TPG BIN 3X8MM, MAIN P.C.BOARD
Y16	411 021 5705	SCR S-TPG BIN 3X6MM, HEAT SINK
Y17	411 021 5705	SCR S-TPG BIN 3X6MM, DTL P.C.BOARD, BRACKET
Y18	412 003 1807	SPECIAL SCREW, MECHANISM
Y19	411 022 4004	SCR S-TPG FLT 3X6MM, MECHANISM
Y20	411 020 9803	SCR S-TPG BRZ + FLG 3X6MM, POWER TRANSFORMER
Y21	411 001 4407	SCR S-TPG PAN 3X6MM, LUG MTG., MECHANISM

ELECTRICAL PARTS

Ref. No.	Part No.	Description
51	⚠ 614 023 3612	POWER CORD, AC
52	⚠ 614 200 9789	POWER TRANSFORMER (T901)

MAIN P.C.BOARD ASSY

Ref. No.	Part No.	Description
71	614 217 7709	P.C BOARD ASSY, MAIN
	614 035 5970	SOCKET, PHONES
	614 017 6964	TERMINAL BOARD, TEST POINT
	614 121 6829	HEAT SINK, IC MTG.
	614 217 7938	SOCKET, LINE OUT
T501	614 219 0302	FILTER, LC
T502	614 219 0302	FILTER, LC
L401	614 028 4133	FILTER
L402	614 028 4133	FILTER
X301	614 194 2902	CERAMIC RESONATOR
X701	614 200 0311	CERAMIC RESONATOR
SVR101	614 003 3090	SEMI-FIXED RESISTOR, 20K OHM
or	614 204 1918	SEMI-FIXED RESISTOR, 20K OHM
SVR102	614 003 3120	SEMI-FIXED RESISTOR, 100K OHM
or	614 204 1956	SEMI-FIXED RESISTOR, 100K OHM
SVR201	614 003 3090	SEMI-FIXED RESISTOR, 20K OHM
or	614 204 1918	SEMI-FIXED RESISTOR, 20K OHM
SVR202	614 003 3090	SEMI-FIXED RESISTOR, 20K OHM
or	614 204 1918	SEMI-FIXED RESISTOR, 20K OHM
SVR203	614 003 3052	SEMI-FIXED RESISTOR, 2K OHM

PARTS LIST

Ref. No.	Part No.	Description
SVR203	614 204 1871	SEMI-FIXED RESISTOR, 2K OHM
CN101	614 017 2546	PLUG, 3P, PHOTO COUPLER
CN102	614 017 2560	PLUG, 5P, DISC SELECTOR MOTOR
CN103	614 017 2584	PLUG, 7P, LOADING MOTOR
CN104	614 017 2584	PLUG, 7P, SPINDLE/SLED MOTOR
CN105	614 017 2546	PLUG, 3P, TEST POINT, TP8~TP10
CN106	614 017 2591	PLUG, 8P, PICK-UP
CN107	614 017 2577	PLUG, 6P, PICK-UP DETECTOR
CN108	614 016 3865	PLUG, 4P, TEST POINT, TP1~TP4
CN109	614 201 7616	SOCKET, 4P, FRONT SWITCH P.C.BOARD
CN110	614 201 7685	SOCKET, 11P, FRONT SWITCH P.C.BOARD
CN351	614 017 2096	PLUG, 2P, DF DAC & DTL P.C.BOARD (CN352)
CN364	614 017 2119	PLUG, 4P, DTL SWITCH P.C.BOARD (CN363)
CN381	614 020 8917	SOCKET, 10P, DF DAC & DTL P.C.BOARD (CN353,356,358)
CN602	614 020 6555	SOCKET, 3P, POWER SUPPLY P.C.BOARD (CN601)
CN604	614 020 6579	SOCKET, 5P, POWER SWITCH P.C.BOARD (CN603)
RA301	614 004 6625	RESISTOR, 10K OHM X4
RA303	614 004 7523	RESISTOR, 10K OHM X7
IC101	409 108 5502	IC CXA1081M
IC201	409 185 1602	IC CXA1082BQ
IC302	410 072 2701	IC TMP47C820F-3609
IC304	⚠ 409 085 1900	IC LB1645N
IC305	⚠ 409 085 1900	IC LB1645N
IC401	409 187 2102	IC CXD1125Q
IC402	409 123 7109	IC LC3517BS-15
or	409 209 0307	IC UM6116K-2
IC503	409 018 4503	IC LA6458DS
or	409 039 7705	IC NJM4558DD
IC601	⚠ 409 026 8500	IC L78M05
IC602	⚠ 409 077 5305	IC L79M05
IC603	⚠ 409 026 9200	IC L78M10
IC701	410 028 0201	IC TMP42C40P-1367
Q101	405 007 6701	TR 2SB598-F-NP
Q201	405 023 5009	TR 2SD400-E-MP
Q202	405 007 2901	TR 2SB544-E-MP
Q203	405 023 5009	TR 2SD400-E-MP
Q204	405 007 2901	TR 2SB544-E-MP
Q205	405 023 5009	TR 2SD400-E-MP
Q206	405 007 2901	TR 2SB544-E-MP
Q207	405 023 5009	TR 2SD400-E-MP
Q208	405 007 2901	TR 2SB544-E-MP
Q250	405 073 6407	TR 2SK772-E
Q301	405 018 2600	TR 2SC3400
or	405 000 4407	TR DTC124ES
Q401	405 021 0600	TR 2SD1012-G-SPA
Q503	405 021 0600	TR 2SD1012-G-SPA
or	405 033 6805	TR 2SD1468S-S
Q504	405 021 0600	TR 2SD1012-G-SPA
or	405 033 6805	TR 2SD1468S-S
Q505	405 021 0600	TR 2SD1012-G-SPA
or	405 033 6805	TR 2SD1468S-S
Q506	405 021 0600	TR 2SD1012-G-SPA
or	405 033 6805	TR 2SD1468S-S
Q571	405 036 3108	TR 2SA1503
or	405 082 4609	TR DTA123YS
Q572	405 018 2600	TR 2SC3400
or	405 000 4407	TR DTC124ES
Q573	405 036 3108	TR 2SA1503
or	405 082 4609	TR DTA123YS
Q574	405 019 3705	TR 2SC536-G-AUD-SPA
Q575	405 036 3108	TR 2SA1503
or	405 082 4609	TR DTA123YS
Q576	405 018 2600	TR 2SC3400
or	405 000 4407	TR DTC124ES
Q577	405 036 3108	TR 2SA1503
or	405 082 4609	TR DTA123YS

Ref. No.	Part No.	Description
D305	407 005 4505	DIODE DS442X
or	407 013 7109	DIODE 1S2473
D308	407 005 4505	DIODE DS442X
or	407 013 7109	DIODE 1S2473
D309	407 005 4505	DIODE DS442X
or	407 013 7109	DIODE 1S2473
D310	407 007 9904	DIODE GMA01
or	407 012 4406	DIODE 1SS133
D311	407 007 9904	DIODE GMA01
or	407 012 4406	DIODE 1SS133
D312	407 005 4505	DIODE DS442X
or	407 013 7109	DIODE 1S2473
D313	407 005 4505	DIODE DS442X
or	407 013 7109	DIODE 1S2473
D314	407 005 4505	DIODE DS442X
or	407 013 7109	DIODE 1S2473
D321	407 053 5905	ZENER DIODE MTZ4.7C
D322	407 053 5707	ZENER DIODE MTZ4.7A
D561	407 007 9904	DIODE GMA01
or	407 012 4406	DIODE 1SS133
D562	407 005 4505	DIODE DS442X
or	407 013 7109	DIODE 1S2473
D563	407 007 9904	DIODE GMA01
or	407 012 4406	DIODE 1SS133
D564	407 007 9904	DIODE GMA01
or	407 012 4406	DIODE 1SS133
D571	407 007 9904	DIODE GMA01
or	407 012 4406	DIODE 1SS133
D572	407 007 9904	DIODE GMA01
or	407 012 4406	DIODE 1SS133
D576	407 053 6308	ZENER DIODE MTZ5.1B
D601	⚠ 408 007 9307	DIODE 1SR35-200A-HP
or	⚠ 407 005 2006	DIODE DS135D-KB1
D602	⚠ 408 007 9307	DIODE 1SR35-200A-HP
or	⚠ 407 005 2006	DIODE DS135D-KB1
D603	⚠ 408 007 9307	DIODE 1SR35-200A-HP
or	⚠ 407 005 2006	DIODE DS135D-KB1
D604	⚠ 408 007 9307	DIODE 1SR35-200A-HP
or	⚠ 407 005 2006	DIODE DS135D-KB1
C101	403 041 9009	ELECT 10U M 16V
C102	403 003 9405	CERAMIC 4700P K 25V
C103	403 012 4101	CERAMIC 15P J 50V
C104	403 113 9500	CERAMIC 4P K 50V
C105	403 004 0500	CERAMIC 0.047U K 25V
C106	403 002 7204	CERAMIC 1500P K 25V
C107	403 002 1905	CERAMIC 0.01U K 25V
C108	403 048 6506	ELECT 0.47U M 50V
C109	403 002 1905	CERAMIC 0.01U K 25V
C110	403 039 6904	ELECT 100U M 10V
C111	403 040 7709	ELECT 33U M 10V
C112	403 040 7709	ELECT 33U M 10V
C113	403 002 0502	CERAMIC 1000P K 25V
C114	403 003 9405	CERAMIC 4700P K 25V
C201	403 067 5603	MT-COMPO 0.1U J 50V
C202	403 067 6709	MT-COMPO 0.22U J 50V
C203	403 050 6808	ELECT 3.3U M 50V
C205	403 002 1905	CERAMIC 0.01U K 25V
C206	403 003 9405	CERAMIC 4700P K 25V
C207	403 041 2307	ELECT 47U M 10V
C208	403 048 6506	ELECT 0.47U M 50V
C209	403 003 1409	CERAMIC 2200P K 25V
C210	403 040 7709	ELECT 33U M 10V
C211	403 049 0305	ELECT 1U M 50V
C212	403 048 6506	ELECT 0.47U M 50V
C213	403 040 1905	ELECT 22U M 10V
C214	403 048 6506	ELECT 0.47U M 50V
C215	403 003 6701	CERAMIC 0.033U K 25V
C216	403 003 6701	CERAMIC 0.033U K 25V
C217	403 003 6701	CERAMIC 0.033U K 25V
C225	403 069 0705	CERAMIC 1000P K 50V
C226	403 067 6709	MT-COMPO 0.22U J 50V
C227	403 069 0705	CERAMIC 1000P K 50V
C228	403 067 6709	MT-COMPO 0.22U J 50V
C240	403 003 9405	CERAMIC 4700P K 25V

PARTS LIST

Ref. No.	Part No.	Description
C303	403 041 2307	ELECT 47U M 10V
C307	403 002 3602	CERAMIC 0.1U K 25V
C308	403 002 1905	CERAMIC 0.01U K 25V
C309	403 002 3602	CERAMIC 0.1U K 25V
C310	403 002 1905	CERAMIC 0.01U K 25V
C311	403 043 9304	ELECT 47U M 16V
C401	403 050 0004	ELECT 2.2U M 50V
C402	403 040 7709	ELECT 33U M 10V
C403	403 002 1905	CERAMIC 0.01U K 25V
C404	403 002 0502	CERAMIC 1000P K 25V
C501	403 039 6904	ELECT 100U M 10V
C502	403 039 6904	ELECT 100U M 10V
C509	403 061 1403	POLYESTER 3900P J 50V
C510	403 061 1403	POLYESTER 3900P J 50V
C513	403 041 9009	ELECT 10U M 16V
C514	403 041 9009	ELECT 10U M 16V
C521	403 063 1203	POLYESTER 0.068U J 50V
C522	403 063 1203	POLYESTER 0.068U J 50V
C523	403 047 0109	ELECT 4.7U M 25V
C524	403 047 0109	ELECT 4.7U M 25V
C525	403 069 0705	CERAMIC 1000P K 50V
C526	403 069 0705	CERAMIC 1000P K 50V
C561	403 085 4008	NP-ELECT 10U M 16V
C562	403 050 0004	ELECT 2.2U M 50V
C563	403 050 0004	ELECT 2.2U M 50V
C565	403 042 2702	ELECT 100U M 16V
C601	403 069 8404	CERAMIC 0.01U Z 50V
C602	403 069 8404	CERAMIC 0.01U Z 50V
C603	403 043 2503	ELECT 2200U M 16V
C604	403 043 2503	ELECT 2200U M 16V
C605	403 039 6904	ELECT 100U M 10V
C606	403 039 6904	ELECT 100U M 10V
C607	403 044 9808	ELECT 100U M 25V
C608	403 042 2702	ELECT 100U M 16V
C691	403 074 2602	CERAMIC 0.047U Z 50V
C701	403 040 7709	ELECT 33U M 10V
C702	403 069 0705	CERAMIC 1000P K 50V
R101	401 024 7004	CARBON 1K JA 1/6W
R102	401 024 9701	CARBON 12K JA 1/6W
R103	401 027 8602	CARBON 8.2K JA 1/6W
R104	401 026 4605	CARBON 33K JA 1/6W
R105	401 025 8208	CARBON 22K JA 1/6W
R106	401 024 7707	CARBON 100K JA 1/6W
R107	401 024 7400	CARBON 10K JA 1/6W
R108	401 026 6401	CARBON 39 JA 1/6W
R109	401 026 6401	CARBON 39 JA 1/6W
R110	401 026 3905	CARBON 330 JA 1/6W
R111	401 024 7004	CARBON 1K JA 1/6W
R112	401 024 7004	CARBON 1K JA 1/6W
R113	401 025 4606	CARBON 18K JA 1/6W
R114	401 024 7004	CARBON 1K JA 1/6W
R201	401 026 3905	CARBON 330 JA 1/6W
R202	401 025 0004	CARBON 120K JA 1/6W
R203	401 026 0607	CARBON 270 JA 1/6W
R204	401 025 8703	CARBON 220K JA 1/6W
R205	401 027 9005	CARBON 82K JA 1/6W
R206	401 025 8208	CARBON 22K JA 1/6W
R207	401 024 7707	CARBON 100K JA 1/6W
R208	401 026 1307	CARBON 27K JA 1/6W
R209	401 024 7707	CARBON 100K JA 1/6W
R210	401 026 0607	CARBON 270 JA 1/6W
R211	401 027 3201	CARBON 560K JA 1/6W
R212	401 026 8108	CARBON 4.7 JA 1/6W
R213	401 025 4903	CARBON 180K JA 1/6W
R214	401 026 4308	CARBON 3.3K JA 1/6W
R215	401 025 8208	CARBON 22K JA 1/6W
R216	401 024 8001	CARBON 1M JA 1/6W
R217	401 024 7707	CARBON 100K JA 1/6W
R218	401 012 8105	CARBON 100K JA 1/4W
R219	401 024 7400	CARBON 10K JA 1/6W
R220	401 026 0607	CARBON 270 JA 1/6W
R221	401 025 2305	CARBON 150K JA 1/6W
R222	401 026 8108	CARBON 4.7 JA 1/6W

Ref. No.	Part No.	Description
R227	401 019 5909	CARBON 4.7 JB 1/4W
R228	401 019 5909	CARBON 4.7 JB 1/4W
R231	401 019 5909	CARBON 4.7 JB 1/4W
R232	401 019 5909	CARBON 4.7 JB 1/4W
R233	401 019 5909	CARBON 4.7 JB 1/4W
R234	401 019 5909	CARBON 4.7 JB 1/4W
R242	401 027 3003	CARBON 56K JA 1/6W
R243	401 025 1605	CARBON 1.5K JA 1/6W
R244	401 024 7400	CARBON 10K JA 1/6W
R245	401 024 7400	CARBON 10K JA 1/6W
R251	401 012 7009	CARBON 10K JA 1/4W
R252	401 024 8001	CARBON 1M JA 1/6W
R253	401 024 7707	CARBON 100K JA 1/6W
R254	401 027 5908	CARBON 68K JA 1/6W
R301	401 024 7400	CARBON 10K JA 1/6W
R302	401 024 8001	CARBON 1M JA 1/6W
R303	401 024 7400	CARBON 10K JA 1/6W
R304	401 019 5909	CARBON 4.7 JB 1/4W
R305	401 019 5909	CARBON 4.7 JB 1/4W
R306	401 018 5801	CARBON 330K JA 1/4W
R314	401 024 7400	CARBON 10K JA 1/6W
R315	401 024 7400	CARBON 10K JA 1/6W
R316	401 024 7400	CARBON 10K JA 1/6W
R317	401 024 7400	CARBON 10K JA 1/6W
R401	401 024 7707	CARBON 100K JA 1/6W
R402	401 024 6700	CARBON 100 JA 1/6W
R403	401 024 9701	CARBON 12K JA 1/6W
R404	401 012 7009	CARBON 10K JA 1/4W
R410	401 026 4605	CARBON 33K JA 1/6W
R411	401 024 7707	CARBON 100K JA 1/6W
R513	401 026 1000	CARBON 2.7K JA 1/6W
R514	401 026 1000	CARBON 2.7K JA 1/6W
R515	401 027 2600	CARBON 5.6K JA 1/6W
R516	401 027 2600	CARBON 5.6K JA 1/6W
R517	401 024 9701	CARBON 12K JA 1/6W
R518	401 024 9701	CARBON 12K JA 1/6W
R519	401 026 4605	CARBON 33K JA 1/6W
R520	401 026 4605	CARBON 33K JA 1/6W
R523	401 026 9600	CARBON 470 JA 1/6W
R524	401 026 9600	CARBON 470 JA 1/6W
R525	401 025 6105	CARBON 200 JA 1/6W
R526	401 025 6105	CARBON 200 JA 1/6W
R527	401 024 7707	CARBON 100K JA 1/6W
R528	401 024 7707	CARBON 100K JA 1/6W
R531	401 026 9907	CARBON 4.7K JA 1/6W
R532	401 026 9907	CARBON 4.7K JA 1/6W
R533	401 027 0507	CARBON 470K JA 1/6W
R534	401 027 0507	CARBON 470K JA 1/6W
R535	401 026 9907	CARBON 4.7K JA 1/6W
R536	401 026 9907	CARBON 4.7K JA 1/6W
R561	401 027 2303	CARBON 560 JA 1/6W
R564	401 026 0607	CARBON 270 JA 1/6W
R565	401 024 6700	CARBON 100 JA 1/6W
R566	401 024 7004	CARBON 1K JA 1/6W
R568	401 026 4605	CARBON 33K JA 1/6W
R569	401 026 1000	CARBON 2.7K JA 1/6W
R571	401 024 7707	CARBON 100K JA 1/6W
R572	401 024 7707	CARBON 100K JA 1/6W
R579	401 027 0309	CARBON 47K JA 1/6W
R581	401 024 7004	CARBON 1K JA 1/6W
R701	401 024 7004	CARBON 1K JA 1/6W
R702	401 024 8001	CARBON 1M JA 1/6W
R711	401 024 7400	CARBON 10K JA 1/6W
R712	401 024 7400	CARBON 10K JA 1/6W

POWER SUPPLY P.C.BOARD ASSY

Ref. No.	Part No.	Description
72	614 217 7716	P.C BOARD ASSY, POWER SUPPLY
	614 051 9785	LUG (REF.NO.28)
CN601	614 020 6555	SOCKET, 3P, MAIN P.C.BOARD (CN602)

PARTS LIST

Ref. No.	Part No.	Description
C651	403 074 2602	CERAMIC 0.047U Z 50V

POWER SWITCH P.C.BOARD ASSY

Ref. No.	Part No.	Description
73	614 217 7723	P.C BOARD ASSY, POWER SWITCH
S901	614 019 0656	PUSH SWITCH, POWER
CN603	614 020 6579	SOCKET, 5P, MAIN P.C.BOARD (CN604)
C901	403 069 8404	CERAMIC 0.01U Z 50V
C902	403 069 8404	CERAMIC 0.01U Z 50V

LCD P.C.BOARD ASSY

Ref. No.	Part No.	Description
74	614 217 7747	P.C BOARD ASSY, LCD
	614 198 3486	LCD
	614 046 0032	LAMP (REF.NO.53)

PHONES P.C.BOARD ASSY

Ref. No.	Part No.	Description
75	614 217 7204	ASSY, PCB, PHONES
	614 020 2281	SOCKET, PHONES
VR801	614 217 7754	VARIABLE RESISTOR, PHONES LEVEL ADJ.
	614 051 9808	PLUG, GROUND
IC801	409 039 7101	IC NJM4556D
C801	403 043 9304	ELECT 47U M 16V
C802	403 043 9304	ELECT 47U M 16V
R801	401 025 1902	CARBON 15K JA 1/6W
R802	401 025 1902	CARBON 15K JA 1/6W
R803	401 026 7002	CARBON 3.9K JA 1/6W
R804	401 026 7002	CARBON 3.9K JA 1/6W
R805	401 021 0701	CARBON 56 JA 1/4W
R806	401 021 0701	CARBON 56 JA 1/4W
R807	401 012 3001	CARBON 10 JB 1/4W
R808	401 012 3001	CARBON 10 JB 1/4W

FRONT SWITCH P.C.BOARD ASSY

Ref. No.	Part No.	Description
76	614 217 7211	ASSY, PCB, FRONT SWITCH
S301	614 018 9049	SWITCH, EJECT
S311	614 018 9049	SWITCH, DISC SELECTION KEY 1
S312	614 018 9049	SWITCH, DISC SELECTION KEY 2
S313	614 018 9049	SWITCH, DISC SELECTION KEY 3
S314	614 018 9049	SWITCH, DISC SELECTION KEY 4
S315	614 018 9049	SWITCH, DISC SELECTION KEY 5
S316	614 018 9049	SWITCH, DISC SELECTION KEY 6
S317	614 018 9049	SWITCH, DISC SELECTION KEY 7
S318	614 018 9049	SWITCH, DISC SELECTION KEY 8
S319	614 018 9049	SWITCH, DISC SELECTION KEY 9
S320	614 018 9049	SWITCH, DISC SELECTION KEY 10
S321	614 018 9049	SWITCH, RANDAM
S322	614 018 9049	SWITCH, MEMORY
S323	614 018 9049	SWITCH, INTRO SCAN
S324	614 018 9049	SWITCH, REPEAT
S325	614 018 9049	SWITCH, CLEAR
S326	614 018 9049	SWITCH, DISPLAY
S327	614 018 9049	SWITCH, BACK SKIP
S328	614 018 9049	SWITCH, FF SKIP
S331	614 018 9049	SWITCH, STOP
S332	614 018 9049	SWITCH, PLAY/PAUSE
S333	614 018 9049	SWITCH, BACK SEARCH
S334	614 018 9049	SWITCH, FF SEARCH
	614 051 9785	PLUG, GROUND

Ref. No.	Part No.	Description
S702	614 024 2829	SPECIAL SWITCH, REMOTE SENSOR, GP1U11S
or	614 208 1198	OPTO CONNECTOR, REMOTE SENSOR
CN109	614 035 4935	SOCKET, 4P, MAIN P.C.BOARD
CN110-1	614 035 4942	SOCKET, 5P, MAIN P.C.BOARD (CN110)
CN110-2	614 035 4959	SOCKET, 6P, MAIN P.C.BOARD (CN110)
D301	407 007 9904	DIODE GMA01
or	407 012 4406	DIODE 1SS133
D302	407 007 9904	DIODE GMA01
or	407 012 4406	DIODE 1SS133
D303	407 007 9904	DIODE GMA01
or	407 012 4406	DIODE 1SS133
D304	407 007 9904	DIODE GMA01
or	407 012 4406	DIODE 1SS133
C331	403 074 2602	CERAMIC 0.047U Z 50V

DF DAC & DTL P.C.BOARD ASSY

Ref. No.	Part No.	Description
77	614 217 7228	ASSY, PCB, DF DAC & DTL
	614 221 0819	ASSY, CONNECTOR-S, SHIELD, CN352 MTG.
L351	614 028 6748	FILTER
X351	614 210 5986	RESONATOR (C391=9PF)
or	614 212 1030	RESONATOR (C391=27PF)
SVR351	614 204 1956	SEMI-FIXED RESISTOR, 100K OHM
SVR352	614 204 1956	SEMI-FIXED RESISTOR, 100K OHM
CN352	614 020 1215	SOCKET, 2P, MAIN P.C.BOARD (CN351)
CN353	614 020 6562	SOCKET, 4P, MAIN P.C.BOARD (CN381)
CN354	614 020 6555	SOCKET, 3P, MAIN P.C.BOARD
CN356	614 020 6555	SOCKET, 3P, MAIN P.C.BOARD (CN381)
CN358	614 020 8849	SOCKET, 3P, MAIN P.C.BOARD (CN381)
CN359	614 201 7647	SOCKET, 7P, DTL SWITCH P.C.BOARD (CN360)
IC351	409 202 4500	IC PCM61P
or	409 210 0402	IC AD1860N
IC352	409 202 4500	IC PCM61P
or	409 210 0402	IC AD1860N
IC353	409 195 4204	IC PD0050
IC371	409 018 4503	IC LA6458DS
or	409 039 7705	IC NJM4558DD
IC381	409 018 4503	IC LA6458DS
or	409 039 7705	IC NJM4558DD
C351	403 081 5900	POLYPRO 330P J 100V
C352	403 081 5900	POLYPRO 330P J 100V
C353	403 069 8404	CERAMIC 0.01U Z 50V
C354	403 069 8404	CERAMIC 0.01U Z 50V
C371	403 041 9009	ELECT 10U M 16V
C372	403 058 3205	POLYESTER 0.015U K 50V
C373	403 041 9009	ELECT 10U M 16V
C381	403 041 9009	ELECT 10U M 16V
C382	403 058 3205	POLYESTER 0.015U K 50V
C383	403 041 9009	ELECT 10U M 16V
C391	403 020 2809	CERAMIC 27P K 50V (X351 ONLY PARTS NO.614 212 1030)
or	403 034 3106	CERAMIC 9P D 50V (X351 ONLY PARTS NO.614 210 5986)
C392	403 020 2809	CERAMIC 27P K 50V (X351 ONLY PARTS NO.614 212 1030)
or	403 034 3106	CERAMIC 9P D 50V (X351 ONLY PARTS NO.614 210 5986)
C393	403 039 6904	ELECT 100U M 10V
C394	403 039 6904	ELECT 100U M 10V
C396	403 041 2307	ELECT 47U M 10V
C397	403 041 2307	ELECT 47U M 10V
C398	403 074 2602	CERAMIC 0.047U Z 50V

PARTS LIST

Ref. No.	Part No.	Description
C399	403 074 2602	CERAMIC 0.047U Z 50V
R351	401 027 0507	CARBON 470K JA 1/6W
R352	401 025 8703	CARBON 220K JA 1/6W
R353	401 024 8001	CARBON 1M JA 1/6W
R354	401 027 3201	CARBON 560K JA 1/6W
R361	401 027 0507	CARBON 470K JA 1/6W
R362	401 025 8703	CARBON 220K JA 1/6W
R363	401 024 8001	CARBON 1M JA 1/6W
R364	401 027 3201	CARBON 560K JA 1/6W
R371	401 024 7707	CARBON 100K JA 1/6W
R372	401 027 1603	CARBON 5.1K JA 1/6W
R373	401 025 3302	CARBON 16K JA 1/6W
R374	401 026 4605	CARBON 33K JA 1/6W
R375	401 027 1603	CARBON 5.1K JA 1/6W
R376	401 026 9600	CARBON 470 JA 1/6W
R377	401 024 7707	CARBON 100K JA 1/6W
R381	401 024 7707	CARBON 100K JA 1/6W
R382	401 027 1603	CARBON 5.1K JA 1/6W
R383	401 025 3302	CARBON 16K JA 1/6W
R384	401 026 4605	CARBON 33K JA 1/6W
R385	401 027 1603	CARBON 5.1K JA 1/6W
R386	401 026 9600	CARBON 470 JA 1/6W
R387	401 024 7707	CARBON 100K JA 1/6W
R390	401 026 1307	CARBON 27K JA 1/6W
R393	401 026 3905	CARBON 330 JA 1/6W

DTL SWITCH P.C.BOARD ASSY

Ref. No.	Part No.	Description
78	614 217 7235	ASSY, PCB, DTL SWITCH
	614 221 0826	ASSY, CONNECTOR-S, SHIELD, CN361 MTG.
SW351	614 217 7945	SWITCH, PUSH, DTL
CN360	614 035 4966	SOCKET, 7P, DF DAC & DTL P.C.BOARD (CN359)
CN363	614 020 1239	SOCKET, 4P, MAIN P.C.BOARD (CN364)
R391	401 026 9600	CARBON 470 JA 1/6W
R392	401 026 9600	CARBON 470 JA 1/6W

DTL LED P.C.BOARD ASSY

Ref. No.	Part No.	Description
79	614 217 7242	ASSY, PCB, DTL LED
D351	407 027 4804	LED SLP-151B-B

REMOTE CONTROL (RB-TLM-3600/CV)

Ref. No.	Part No.	Description
	614 221 7771	REMOTE CONTROL ASSY, UNIT
	614 193 7267	INNER POLY COVER, 180X200MM, REMOTE CONTROL

EXPLODED VIEW (MAGAZINE) & PARTS LIST

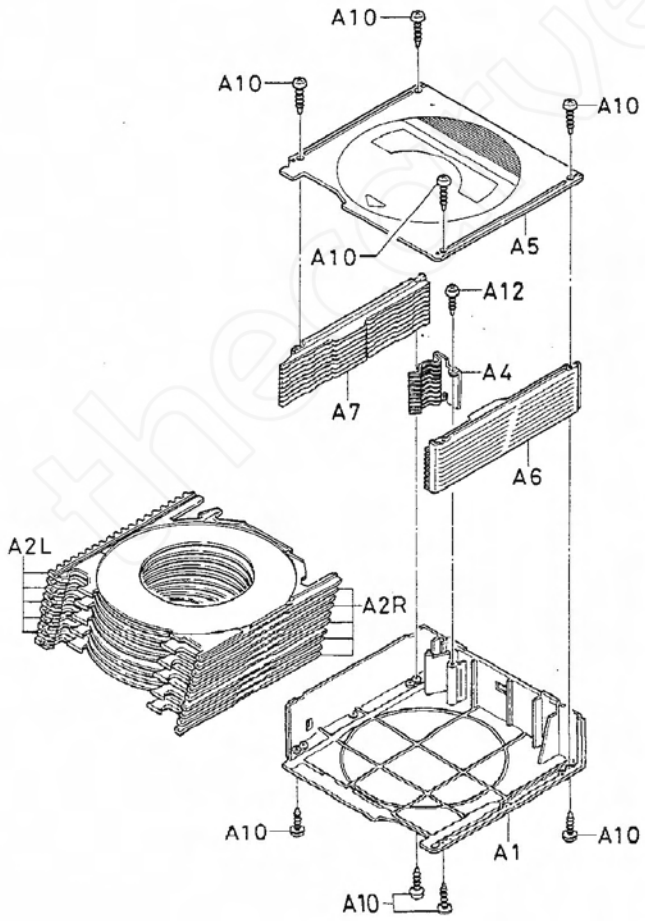

10-CD MAGAZINE (TLM-10)

Ref. No.	Part No.	Description
	614 217 9352	INNER CARTON, 10-CD MAGAZINE
	614 217 9390	TRAY ASSY, 10-CD MAGAZINE
	614 202 1170	LABEL, INDEX, 10-CD MAGAZINE
	614 176 7758	INNER POLYE LAMINA COVER, 200X250MM, 10-CD MAGAZINE
	614 205 9395	NOTICE, PRE-CAUTION, 10-CD MAGAZINE

CABINET & CHASSIS (TLM-10)

Ref. No.	Part No.	Description
A1	614 217 9628	BOTTOM LID ASSY, MAGAZINE
A2L	614 202 7509	TRAY ASSY, CD TRAY, LEFT, 10-CD MAGAZINE
A2R	614 202 7516	TRAY ASSY, CD TRAY, RIGHT, 10-CD MAGAZINE
A4	614 205 7438	SPRING PLATE, TRAY LOCK
A5	614 217 9611	TOP LID ASSY
A6	614 203 2923	SIDE PANEL, RIGHT
A7	614 203 2930	SIDE PANEL, LEFT
A10	411 100 0201	SCR S-TPG BIN 2X8MM, TOP LID ASSY
A12	411 104 7008	SCR S-TPG BIN 2X5MM, SPRING PLATE

3 INCH TRAY INSERTS (TLM-3) (OPTION)

Ref. No.	Part No.	Description
	614 202 7530	TRAY ASSY, 3 INCH MAGAZINE, LEFT (A2L)
	614 202 7547	TRAY ASSY, 3 INCH MAGAZINE, RIGHT (A2R)
	614 221 1915	HOLDER
	614 221 2493	POLY COVER, 150X160MM
	614 221 2554	INSTRUCTION SHEET

EXPLODED VIEW (LOADING)

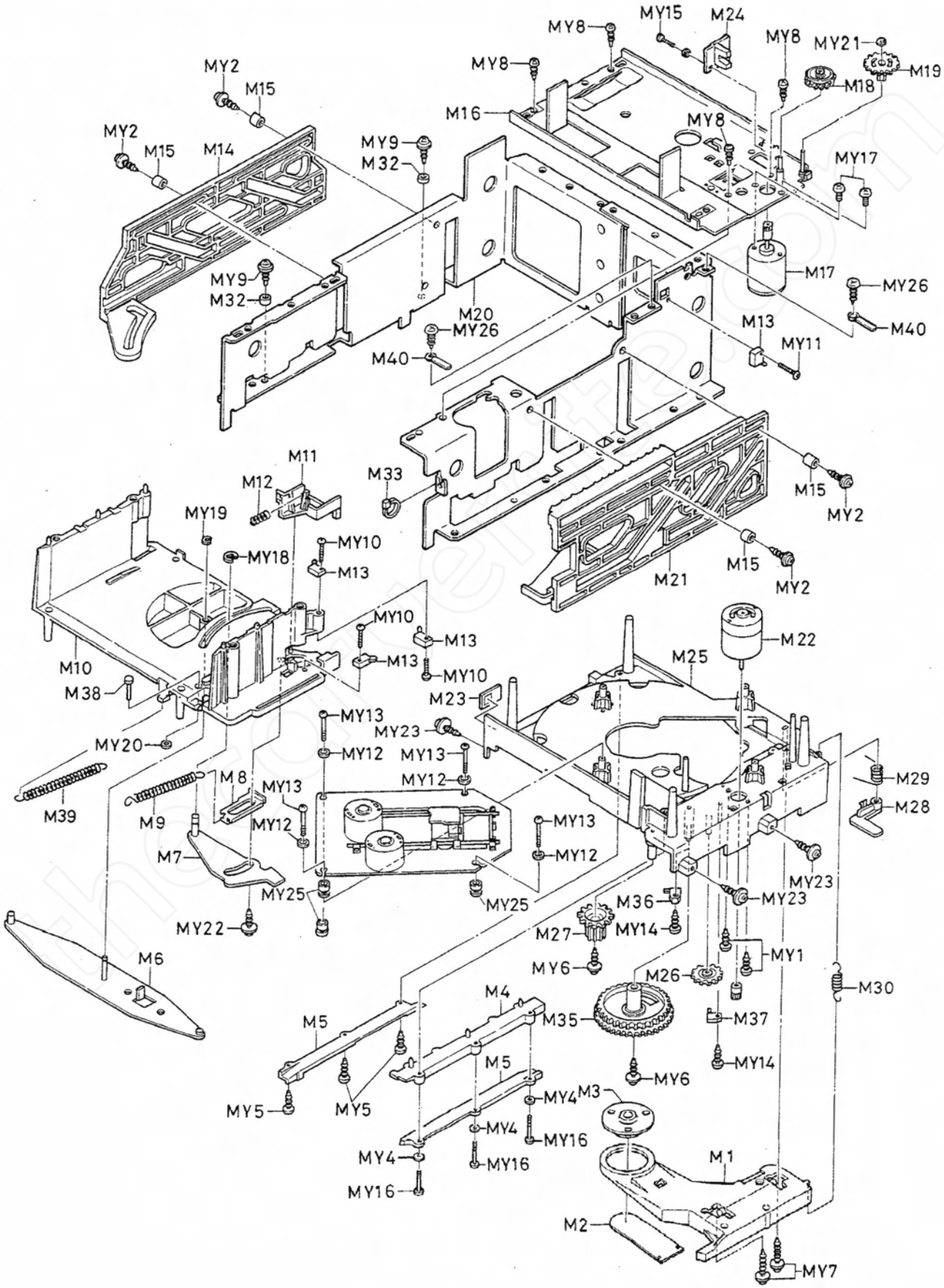

PARTS LIST (LOADING) & EXPLODED VIEW (CD MECHANISM)

LOADING MECHANISM (PM-DADCH2)

Ref. No.	Part No.	Description
M1	614 140 1393	LEVER, CHUCK
M2	614 211 6654	SPRING PLATE, CHUCK
M3	614 135 9342	PULLEY, CHUCK
M4	614 108 2875	BRACKET, TRAY GUIDE
M5	614 108 2110	BRACKET, TRAY GUIDE, LOWER
M6	614 194 6214	LEVER ASSY, SLIDE
M7	614 194 6207	LEVER ASSY, EJECT
M8	614 198 1017	LEVER, HOLD
M9	614 151 7117	SPRING COIL, LEVER RETURN
M10	614 108 2868	BRACKET, MAGAZINE GUIDE
M11	614 140 1423	LEVER, MAGAZINE LOCK
M12	614 151 7124	SPRING COIL, MAGAZINE LOCK LEVER
M13	614 018 9223	SWITCH, MAGAZINE, S355~357
	614 018 9223	SWITCH, MECHANISM INITIALIZATION POSITION DETECT, S351
M14	614 139 1045	SLIDE, SELECTOR, LEFT
M15	614 127 8650	PIPE, SLIDE GUIDE
M16	614 194 6184	BRACKET ASSY, MAGAZINE TOP
M17	614 194 6085	COMMUTATE MOTOR ASSY, DISC SELECTOR
M18	614 134 8926	GEAR, RELAY
M19	614 134 8957	GEAR, SLIDE
M20	614 115 6705	CHASSIS, MAIN
M21	614 139 1052	SLIDE, SELECTOR, RIGHT
M22	614 194 6085	COMMUTATE MOTOR ASSY, LOADING
M23	614 151 8244	SPRING PLATE, CHASSIS
M24	614 194 6368	P.C BOARD ASSY, SENSOR
	614 002 4562	PHOTO INTERRUPTER
	401 026 9600	CARBON 470 JA 1/6W, R351
M25	614 194 6191	CHASSIS ASSY, LOADING MECHANISM
M26	614 202 2689	GEAR, RELAY
M27	614 134 8964	GEAR, TRAY LOADING
M28	614 140 0129	LEVER, TRAY LOCK
M29	614 203 5993	SPRING WIRE, LEVER
M30	614 151 7315	SPRING COIL, LEVER
M32	614 200 3633	PIPE, SLIDE GUIDE
M33	614 129 4636	FIXER, LEAD
M35	614 134 8933	GEAR, CAM
M36	614 024 1778	SWITCH, CHUCKING COPLETION DETECT, S353
M37	614 024 1600	SWITCH, TRAY STORAGE COMPLECTION DETECT, S352
M38	614 145 9363	SHAFT, MAGAZINE ROLLER
M39	614 209 2774	SPRING, TENSION, LOADING MECHANISM
M40	614 129 9136	LUG, LEAD
	614 194 3541	SOCKET, 3P, PHOTO COUPLER (CN101)
	614 194 3558	SOCKET, 5P, MAGAZINE SWITCH/ DISC SELECT MOTOR (CN102)
	614 201 4523	SOCKET, 7P, CAM SWITCH, LOADING MOTOR (CN103)
	614 125 6443	CUSHION, 15X25X3MM, MOTOR LEAD MTG.

FIXING PARTS (MECHANISM B)

Ref. No.	Part No.	Description
MY1	411 003 8809	SCR PAN+SW 2.6X6MM, LOADING MOTOR
MY2	411 020 9902	SCR S-TPG BRZ+FLG 3X8MM, SLIDE
MY4	411 087 4704	WASHER V 2X6X0.4MM, BRACKET
MY5	411 022 7807	SCR S-TPG PAN 2X6 MM, BRACKET
MY6	411 020 9902	SCR S-TPG BRZ+FLG 3X8MM, GEAR
MY7	411 020 9100	SCR S-TPG BRZ+FLG 3X12MM, LEVER
MY8	411 021 6405	SCR S-TPG BIN 3X8MM, BRACKET
MY9	411 021 5705	SCR S-TPG BIN 3X6MM, SLIDE GUIDE
MY10	411 104 4205	SCR TPG PAN PCS 1.7X8MM, SWITCH
or	411 030 2801	SCR TPG PAN PCS 1.7X8MM, SWITCH
MY11	411 099 0503	SCR TPG PAN PCS 1.7X6MM, SWITCH
MY12	411 087 6005	WASHER V 2.6X7.5X0.5MM, BASE MECHANISM FLOATING
MY13	411 119 8908	SCR S-TPG PAN 2X14MM, BASE MECHANISM
MY14	411 022 8408	SCR S-TPG PAN 2X8MM, SWITCH
MY15	411 044 7205	SCR PAN+SW 2X4MM, SENSOR P.C.BOARD
MY16	411 119 8908	SCR S-TPG PAN 2X14MM, BRACKET
MY17	411 002 5908	SCR PAN 2.6X4MM, MOTOR
MY18	412 014 6501	SPECIAL WASHER. SHAFT
MY19	412 022 6500	SPECIAL WASHER, LEVER
MY20	411 015 7906	RING E 1.5MM
MY21	412 027 1906	SPECIAL WASHER, GEAR
MY22	411 020 9902	SCR S-TPG BRZ+FLG 3X8MM, LEVER
MY23	412 005 2307	SPECIAL SCREW, SLIDE
MY25	614 205 1559	RUBBER CUSHION, MECHANISM FLOATING
MY26	411 001 4407	SCR S-TPG PAN 3X6MM, LUG

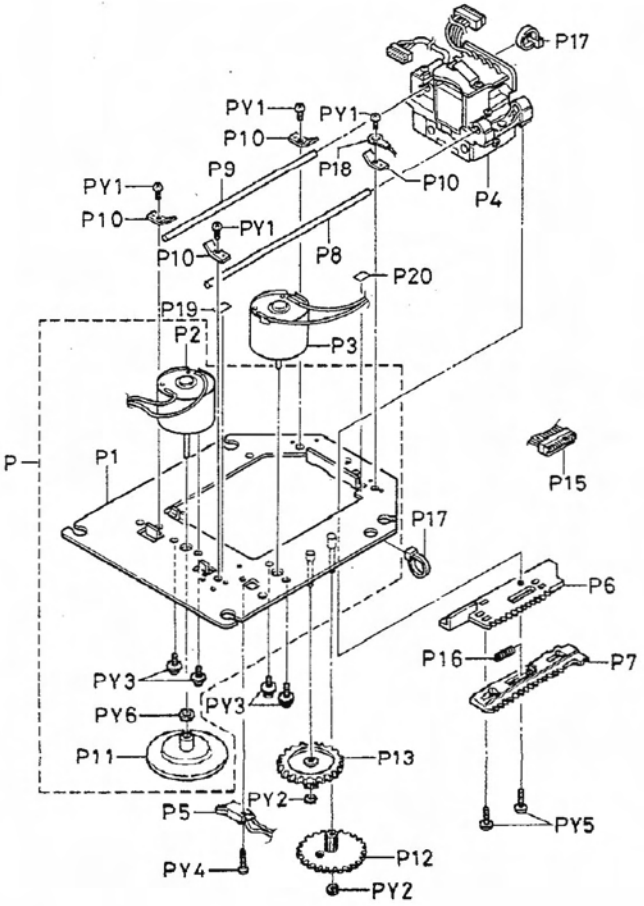

PARTS LIST (CD MECHANISM) & IC BLOCK DIAGRAM

CD MECHANISM (PM-DADCH2B)

Ref. No.	Part No.	Description
P	614 222 3208	CHASSIS ASSY WITH SPINDLE MOTOR & TURN TABLE (REF.NO.P1,P2,P11,PY3&PY6)
P1	614 067 2756	CHASSIS ASSY, BASE MECHANISM
P2	614 045 2105	COMMUTATE MOTOR, SPINDLE
P3	614 045 2136	COMMUTATE MOTOR ASSY, SLED
P4	614 199 0712	PICK-UP
P5	614 018 9223	SWITCH, LIMIT, S354
P6	614 134 8902	GEAR, PICKUP SLED
P7	614 134 8919	GEAR, PICKUP SLED
P8	614 145 9653	SHAFT, PICKUP SLED, LONG
P9	614 145 9622	SHAFT, PICKUP SLED, SHORT
P10	614 207 2653	SPRING PLATE, SHAFT
P11	614 073 7073	TURN TABLE
P12	614 134 8872	GEAR, PICKUP SLED
P13	614 134 8889	GEAR, RELAY
P15	614 201 4516	SOCKET, 7P, MAIN P.C.BOARD, CN104
P16	614 151 7223	SPRING COIL, PICKUP SLED GEAR
P17	614 129 4636	FIXER, LEAD MTG.
P18	614 130 0535	LUG, GROUND
P19	614 222 1280	SHEET, 10X4X0.12MM, CHASSIS MTG.
P20	614 222 1273	SHEET, 8X4X0.25MM, CHASSIS MTG.
	HZGMCGR6020++	MC-GREASE, MOLYKOTE, X5-6020, PICKUP SLED
	HZGFLGR474B++	F-GREASE, FLOIL, G-474B, GEAR SHAFT
	HZCTBND2001++	THREE-BOND, TB2001, TURN TABLE (TB2105 MIXED IN A 1 : 1 RATIO)
	HZCTBND2105++	THREE-BOND, TB2105, TURN TABLE (TB2001 MIXED IN A 1 : 1 RATIO)

FIXING PARTS (MECHANISM E)

Ref. No.	Part No.	Description
PY1	411 028 2806	SCR S-TPG PAN 2X3MM, SPRING PLATE
PY2	412 013 0609	SPECIAL WASHER, 1.6X3.2X0.25MM, GEAR
PY3	411 044 7007	SCR PAN+SW 2X3MM, SLED MOTOR
	411 044 7007	SCR PAN+SW 2X3MM, SPINDLE MOTOR
PY4	411 099 0503	SCR TPG PAN PCS 1.7X6MM, LIMIT SWITCH
PY5	411 044 7502	SCR PAN+SW 2X5MM, PICK-UP SLED GEAR
PY6	412 032 0208	SPECIAL WASHER, 1.9X5X0.3MM, SPINDLE MOTOR

IC304, 305 LB1645N (TAPE MECHANISM MOTOR DRIVER)

Input		Output		Action
IN_1	IN_2	OUT_1	OUT_2	
0	0	0	0	Brake
1	0	1	0	Normal(Reverse)Rotary
0	1	0	1	Reverse(Normal)Rotary
1	1	0	0	Brake

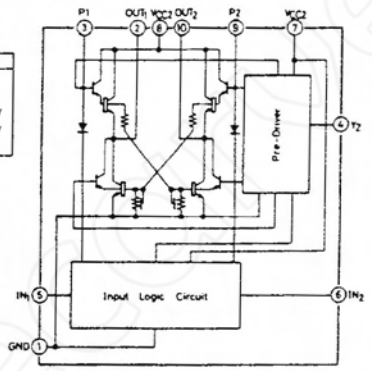

IC351, 352 PCM61P or AD1860N (D/A CONVERTER)

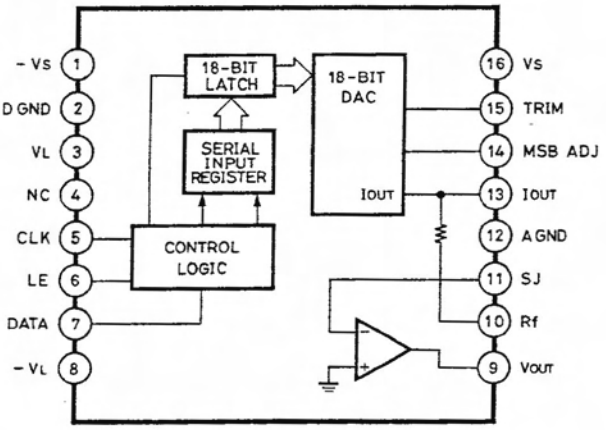

IC353 PD0050 (DIGITAL FILTER)

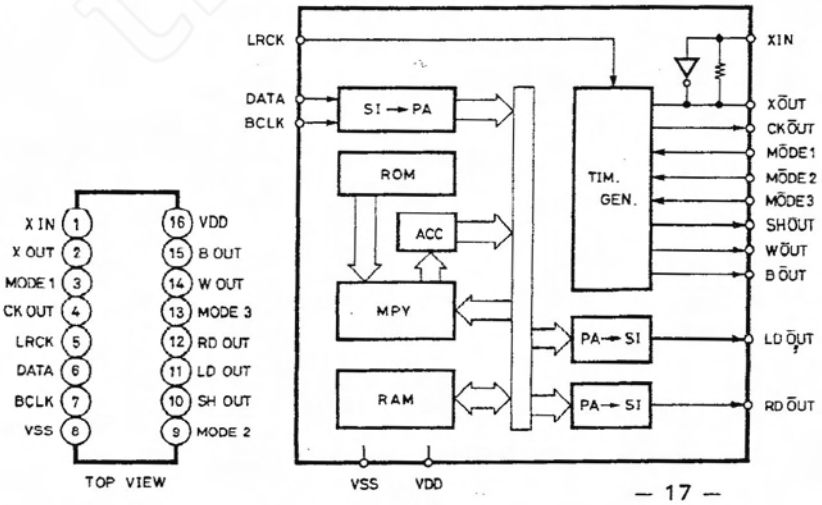

IC371, 381, 503 LA6458DS or NJM4558 DD (DUAL OPERATIONAL AMP.)

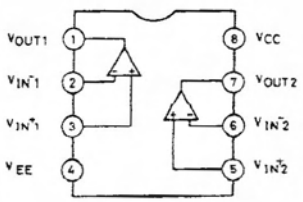

IC BLOCK DIAGRAM

IC401 CXD1125Q
(DIGITAL SIGNAL PROCESSOR)

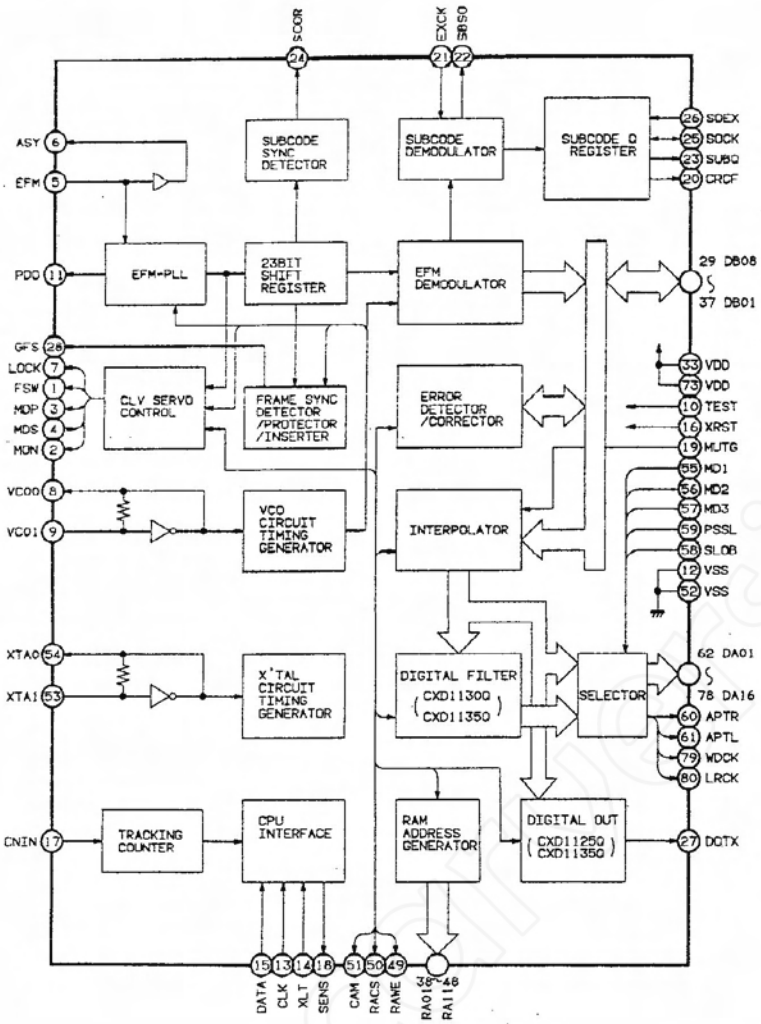

IC601 L78M05 (5V REGULATED POWER SUPPLY)
IC603 L78M10 (10V REGULATED POWER SUPPLY)

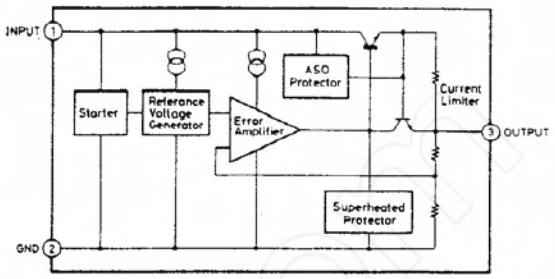

IC602 L79M05 (−5V REGULATED POWER SUPPLY)

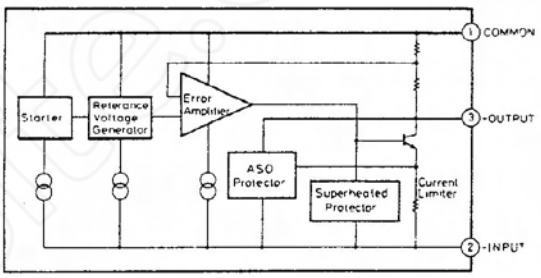

LC801 NJM4556 (DUAL OPERATIONAL AMP.)

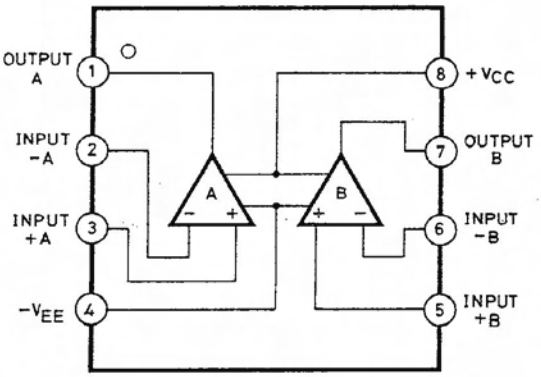

IC402 LC3517BS-15 (STATIC RAM)

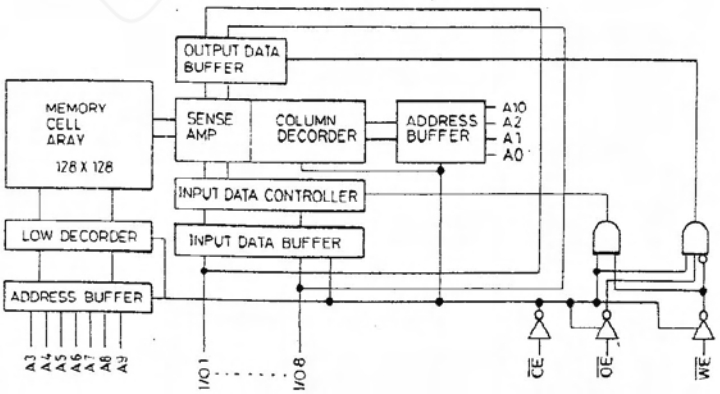

TERMINAL NAME	TERMINAL DESCRIPTION
A0 ~ A10	ADDRESS INPUT
I/O1 I/O8	DATA INPUT / OUTPUT
CE	CHIP ENABLE INPUT
WE	WRITE ENABLE INPUT
OE	OUTPUT ENABLE INPUT
Vcc	+5V POWER SOURCE
GND	GROUND

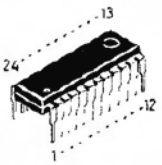

VOLTAGES OF IC'S & TRANSISTORS

IC101 (CXA1081M) (V)

Pin No.	1	2	3	4	5	6	7	8	9	10
STOP	0	0	0	4.6	4.5	−4.9	0	0	0	0
PLAY		0.9		2.7	2.8	−4.8				
Pin No.	**11**	**12**	**13**	**14**	**15**	**16**	**17**	**18**	**19**	**20**
STOP	0	0	0	0	−1.0	1.2	−4.9	−0.1	−0.1	0
PLAY		−0.9	−0.6							
Pin No.	**21**	**22**	**23**	**24**	**25**	**26**	**27**	**28**	**29**	**30**
STOP	−4.4	0	−3.4	0	0	2.5	2.2	0.2	5.0	5.0
PLAY			−1.9				2.4	5.0	0	

IC201 (CXA1082BQ) (V)

Pin No.	1	2	3	4	5	6	7	8	9	10
STOP	0	0	0	0	−0.6	0	0.7	0	0	5.0
Pin No.	**11**	**12**	**13**	**14**	**15**	**16**	**17**	**18**	**19**	**20**
STOP	−0.6	0	0	0.6	0	−4.8	−3.9	0.2	−4.9	0.1
Pin No.	**21**	**22**	**23**	**24**	**25**	**26**	**27**	**28**	**29**	**30**
STOP	4.9	5.0	0	5.0	5.0	0	4.1	4.1	2.3	2.3
Pin No.	**31**	**32**	**33**	**34**	**35**	**36**	**37**	**38**	**39**	**40**
STOP	3.6	2.5	0	0	0	0	5.0	0	−0.5	2.5
Pin No.	**41**	**42**	**43**	**44**	**45**	**46**	**47**	**48**		
STOP	0.2	0	−4.9	−4.5	0	0	0	0		

IC302 (TM47C820F) (V)

Pin No.	1	2	3	4	5	6	7	8	9	10
STOP	2.5	2.5	2.5	2.5	2.5	2.5	2.5	2.5	—	0
PLAY										
Pin No.	**11**	**12**	**13**	**14**	**15**	**16**	**17**	**18**	**19**	**20**
STOP	1.7	1.8	1.8	1.8	0	2.8	4.8	4.9	4.9	0
PLAY									0	
Pin No.	**21**	**22**	**23**	**24**	**25**	**26**	**27**	**28**	**29**	**30**
STOP	2.4	2.4	5	0	4.9	4.9	4.9	4.9	0	4.9
PLAY									4.9	
Pin No.	**31**	**32**	**33**	**34**	**35**	**36**	**37**	**38**	**39**	**40**
STOP	0	0	4.9	4.9	4.9	4.9	0.2	Fluc.	Fluc.	Fluc.
PLAY	Fluc.	4.9			0	4.9	0			
Pin No.	**41**	**42**	**43**	**44**	**45**	**46**	**47**	**48**	**49**	**50**
STOP	Fluc.	Fluc.	Fluc.	Fluc.	Fluc.	2.0	4.9	0	0	4.9
PLAY	Fluc.					Fluc.			4.9	
Pin No.	**51**	**52**	**53**	**54**	**55**	**56**	**57**	**58**	**59**	**60**
STOP	#1 0	#2 0	#3 5.0	#4 5.0	5.0	5.0	0	0	3.6	0
PLAY	5.0	5.0	0	0			5.0	5.0	0	Fluc.
Pin No.	**61**	**62**	**63**	**64**	**65**	**66**	**67**	**68**	**69**	**70**
STOP	2.5	2.5	2.5	2.5	#5 2.5	2.5	2.5	2.5	#6 2.5	#7 2.5
PLAY										
Pin No.	**71**	**72**	**73**	**74**	**75**	**76**	**77**	**78**	**79**	**80**
STOP	2.5	#8 2.5	#9 2.5	#10 2.5	#11 2.5	#12 2.5	#13 2.5	2.5	#14 2.5	2.5
PLAY										

#1 10 COMPACT MAGAZINE / OTHER

#2 MAGAZINE EXIST / LACK

#3 LIMIT SW OFF / ON

#4 PHOTO SW OFF / ON

#5 EMP ON / OFF — POWER ON IS ON MODE, AND OTHER STOP STATE IS HOLDING JUST BEFORE PLAY MODE.

#6 TRAY IN OTHER / ON LOADING

#7 TRAY OUT OTHER / ON LOADING

#8 MECHANISM DOWN OTHER / ON LOADING

VOLTAGES OF IC'S & TRANSISTORS

#9 MECHANISM UP OTHER ON LOADING	#10 MECHANISM UP OTHER ON LOADING	#11 PLAY:650 msec. PAUSE, STOP, 150 msec. OTHER
#12 TRAY OUT SW OFF ON	#13 TRAY IN SW OFF ON	#14 MECHANISM STOP SWITCH STOP OTHER

IC304 (LB1645N) (V)

Pin No.	1	2	3	4	5	6	7	8	9	10
STOP	0	0.5	0.8	0.05	1.8	1.8	10.5	10.5	0.8	0.5
UP		0.5	0.7	3.3	0	1.8		9.6	4.7	3.3
DOWN		3.2	4.7	3.3	1.8	0		10.0	0.8	0

IC305 (LB1645N) (V)

Pin No.	1	2	3	4	5	6	7	8	9	10
STOP	0	0.5	0.08	0.35	1.8	1.8	10.5	10.5	0.8	0.5
TRY OUT		0.5	0.08	3.2	0.03	1.8		9.6	4.6	3.2
TRY IN		0.5	4.6	3.2	1.8	0.03		9.6	0.8	0.5

IC401 (CXD1125) (V)

Pin No.	1	2	3	4	5	6	7	8	9	10
STOP	0	0	0	0	2.2	2.5	0	2.5	2.5	0
PLAY	0	4.9	2.4	2.7	2.4		4.9			
Pin No.	**11**	**12**	**13**	**14**	**15**	**16**	**17**	**18**	**19**	**20**
STOP	2.8	0	4.9	4.9	0	5.0	0.1	0	3.6	0
PLAY	1.2								0	4.9
Pin No.	**21**	**22**	**23**	**24**	**25**	**26**	**27**	**28**	**29**	**30**
STOP	0	4.7	0	0	4.9	4.9	2.5	0	2.7	2.7
PLAY		Fluc.						4.9	Fluc.	Fluc.
Pin No.	**31**	**32**	**33**	**34**	**35**	**36**	**37**	**38**	**39**	**40**
STOP	2.7	2.2	4.9	2.3	1.0	4.1	2.2	2.4	2.4	2.4
PLAY	Fluc.	Fluc.		Fluc.	Fluc.	Fluc.	Fluc.			
Pin No.	**41**	**42**	**43**	**44**	**45**	**46**	**47**	**48**	**49**	**50**
STOP	2.4	2.4	2.4	Fluc.	Fluc.	Fluc.	Fluc.	Fluc.	4.2	2.1
PLAY									4.3	2.5
Pin No.	**51**	**52**	**53**	**54**	**55**	**56**	**57**	**58**	**59**	**60**
STOP	2.0	0	2.5	2.5	4.9	0	0	0	0	1.2
PLAY										
Pin No.	**61**	**62**	**63**	**64**	**65**	**66**	**67**	**68**	**69**	**70**
STOP	1.2	3.6	3.6	1.8	1.8	1.8	4.9	2.5	2.5	1.7
PLAY		0	0	0	0	0	0			2.0
Pin No.	**71**	**72**	**73**	**74**	**75**	**76**	**77**	**78**	**79**	**80**
STOP	4.8	4.9	4.9	4.9	2.4	2.0	2.0	0	Fluc.	Fluc.
PLAY		0		0				Fluc.		

IC402 (LC3517BS-15 or UM6116K) (V)

Pin No.	1	2	3	4	5	6	7	8	9	10
STOP	Fluc.	2.4	2.4	2.4	2.4	2.4	2.4	2.4	2.2	4.1
Pin No.	**11**	**12**	**13**	**14**	**15**	**16**	**17**	**18**	**19**	**20**
STOP	1.0	0	2.3	2.2	2.6	2.6	2.6	2.1	Fluc.	2.1
Pin No.	**21**	**22**	**23**	**24**						
STOP	4.2	Fluc.	Fluc.	4.9						

TRANSISTOR (V)

Transistor No.	Q101			Q201			Q202			Q203			Q204		
Pin name	E	C	B	E	C	B	E	C	B	E	C	B	E	C	B
STOP	5.0	1.0	4.4	0	10	0	0	−10	0	0	11.0	0	0	−10	0
PLAY	4.0	1.8	3.5												
Transistor No.	Q205			Q206			Q207			Q208					
Pin name	E	C	B	E	C	B	E	C	B	E	C	B			
STOP	0	10	0	0	−10	0	0	10	0	0	−10	0			
PLAY															

BLOCK DIAGRAM

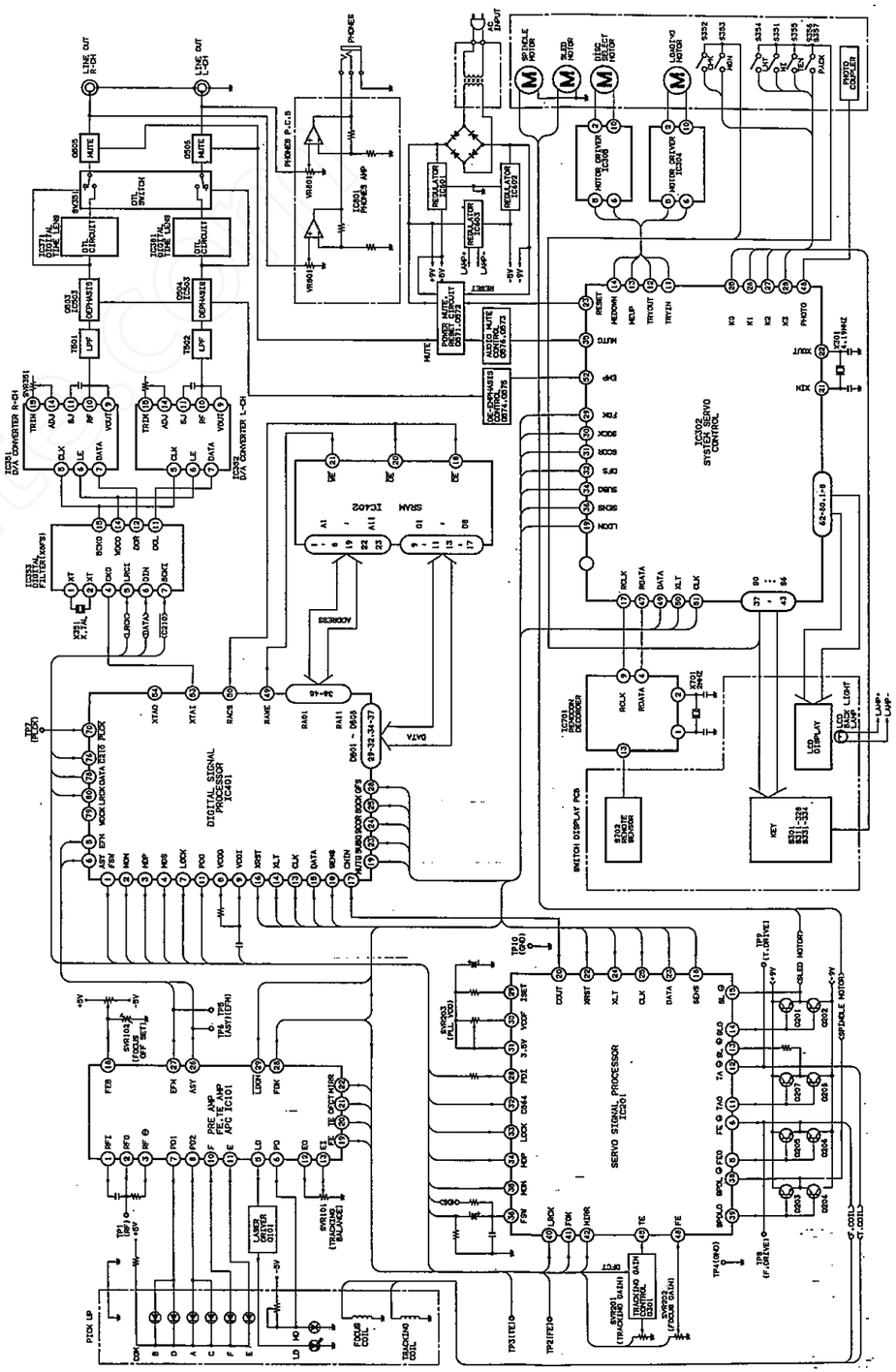

SCHEMATIC DIAGRAM

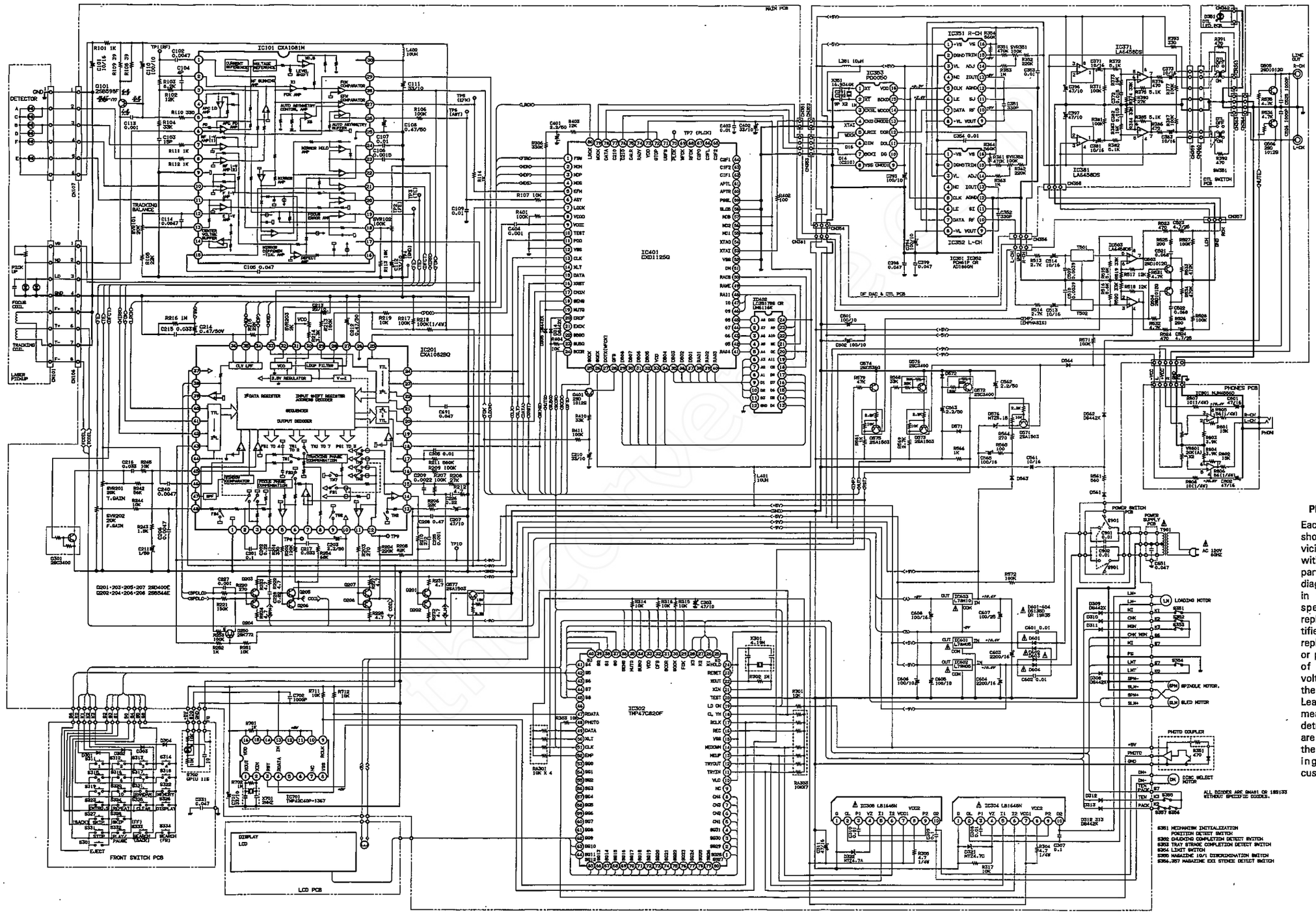

PRODUCT SAFETY NOTICE

Each percaution in this manual should be followed during servicing. Components identified with the IEC symbol⚠ in the parts list and the schematic diagram designate components in which safety can be of special significance. When replacing a component identified with ⚠, use only the replacement parts designated, or parts with the same ratings of resistance, wattage or voltage that are designated in the parts list in this manual.
Leakage-current or resistance measurements must be made to determine that exposed parts are acceptably insulated from the supply circuit before erturning the product to the customer.

WIRING DIAGRAM (MAIN)

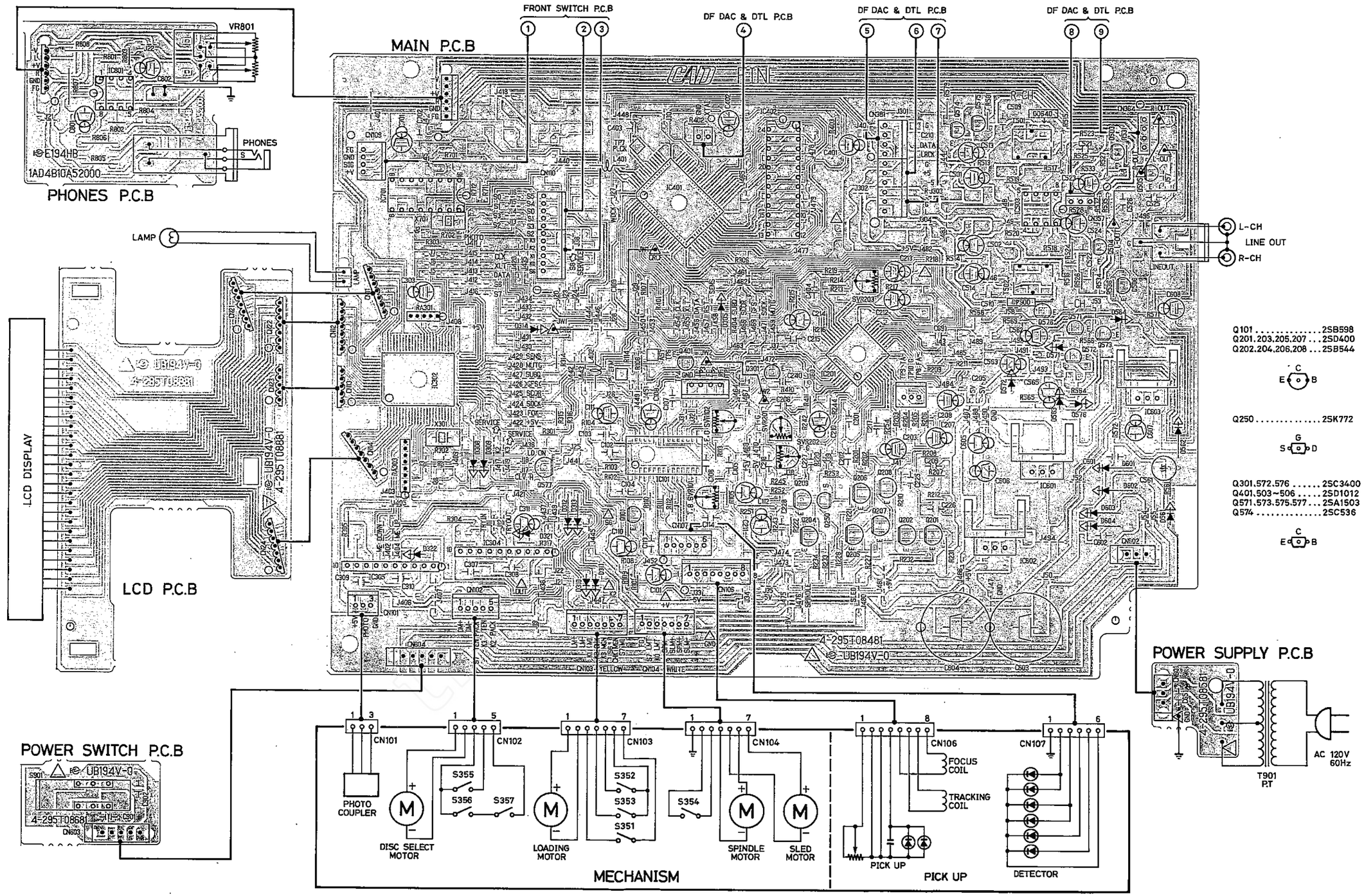

WIRING DIAGRAM (OTHER)

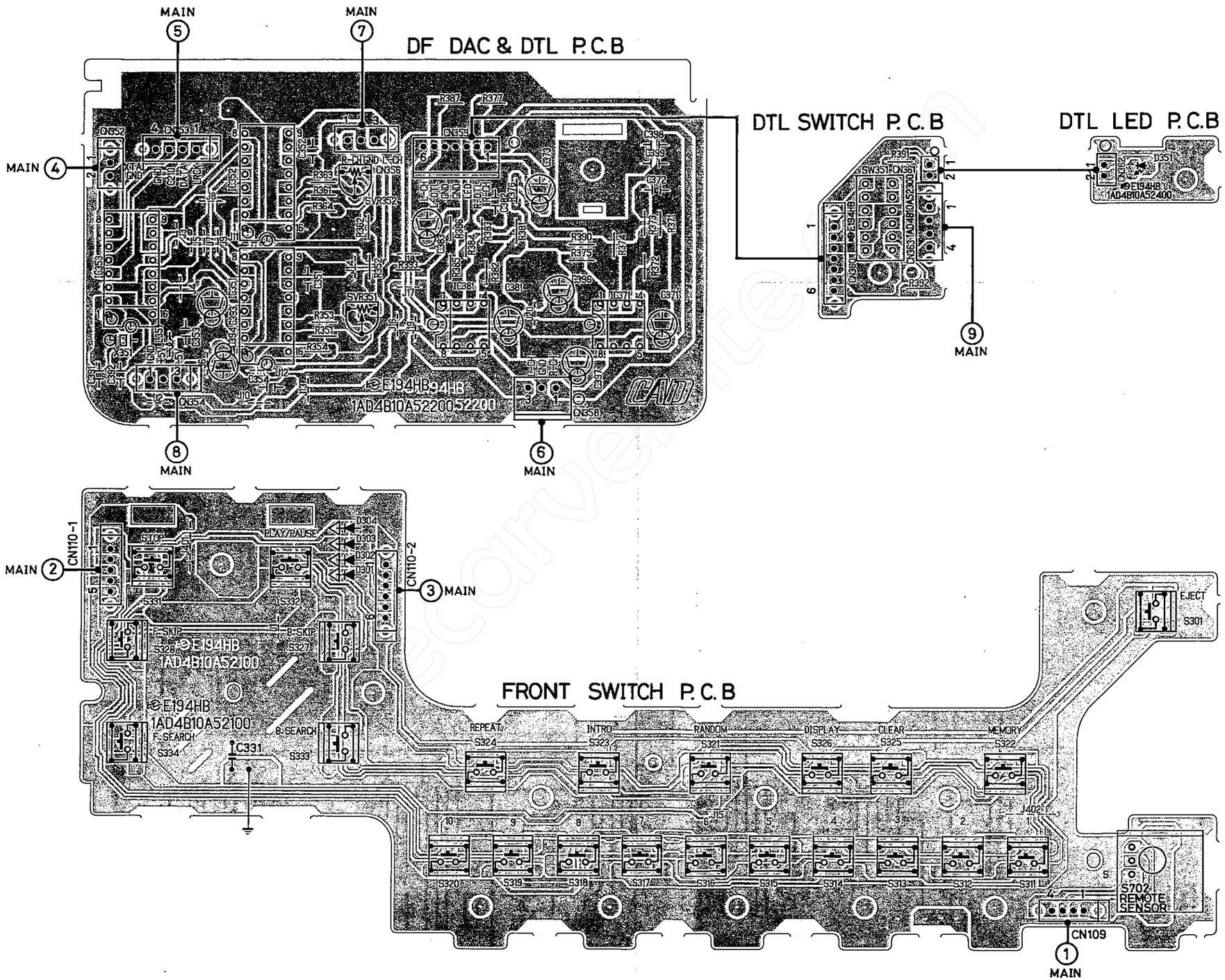

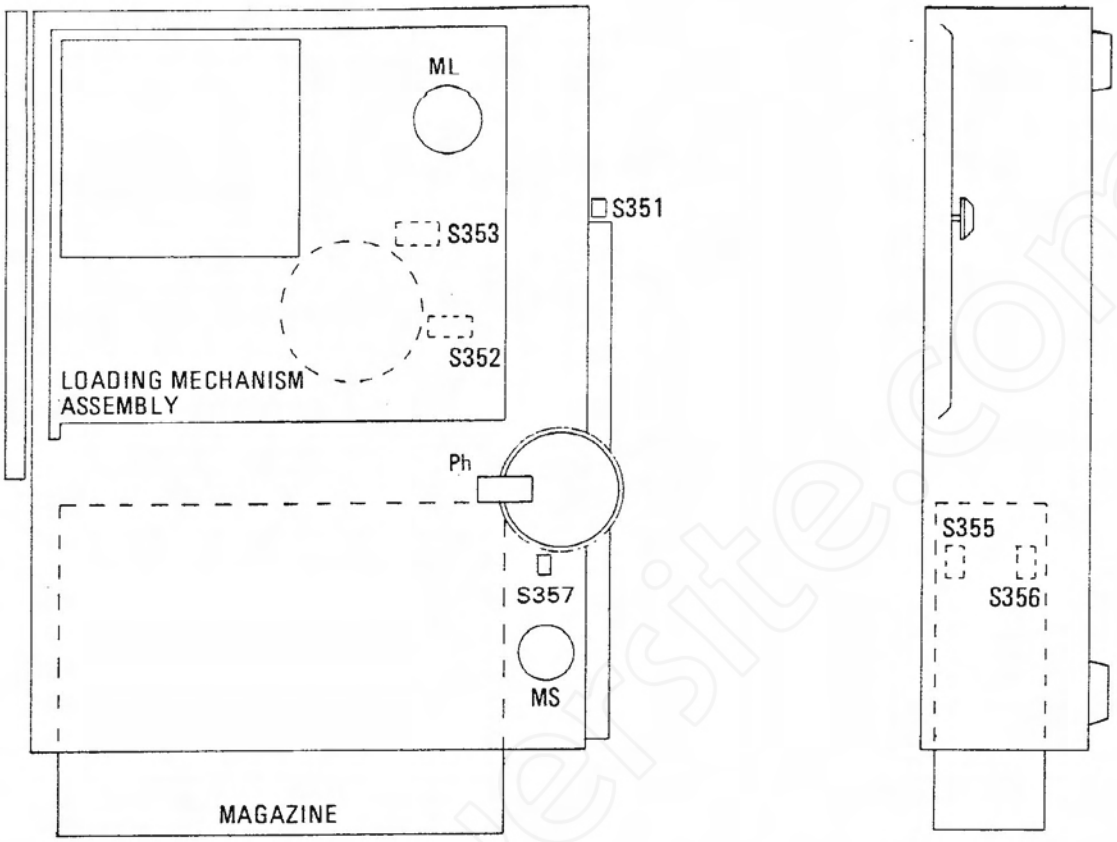

Loading part

ML: Motor for tray pull-out, storage, and chucking
S352: Chucking completion detect switch
S353: Tray storage completion detect switch

Disc selection part

MS: Motor for disc selection (loading mechanism assembly up/down) and magazine pull-out
Ph: Disc selection position detection photosensor
S351: Mechanism initialization position detect switch

Magazine part

S355: Magazine 10/1 discrimination switch
S356, S357: Magazine existence detect switch

The relation between photosensor, disc selection position, magazine lock, and lock cancellation is shown below.
Bottom part of the loading part
The slot position in photo sensor and the position of each disc are decided mechanically, the mechanism initialization switch (S351) becomes OFF, and the position of the second slot corresponds to the disc height of the magazine No. 1.
The height at the time of playing with one magazine corresponds to the height of the disc No. 8 of the 10 disc magazine.

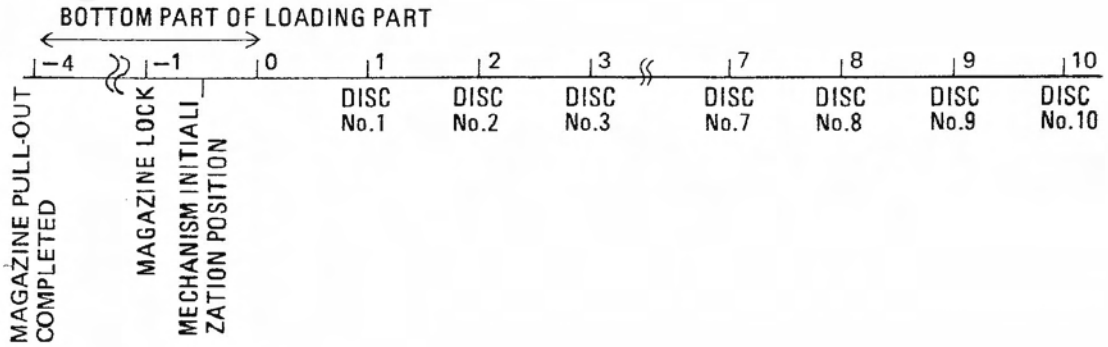

OPERATION EXPLANATIONS FOR EACH MODE

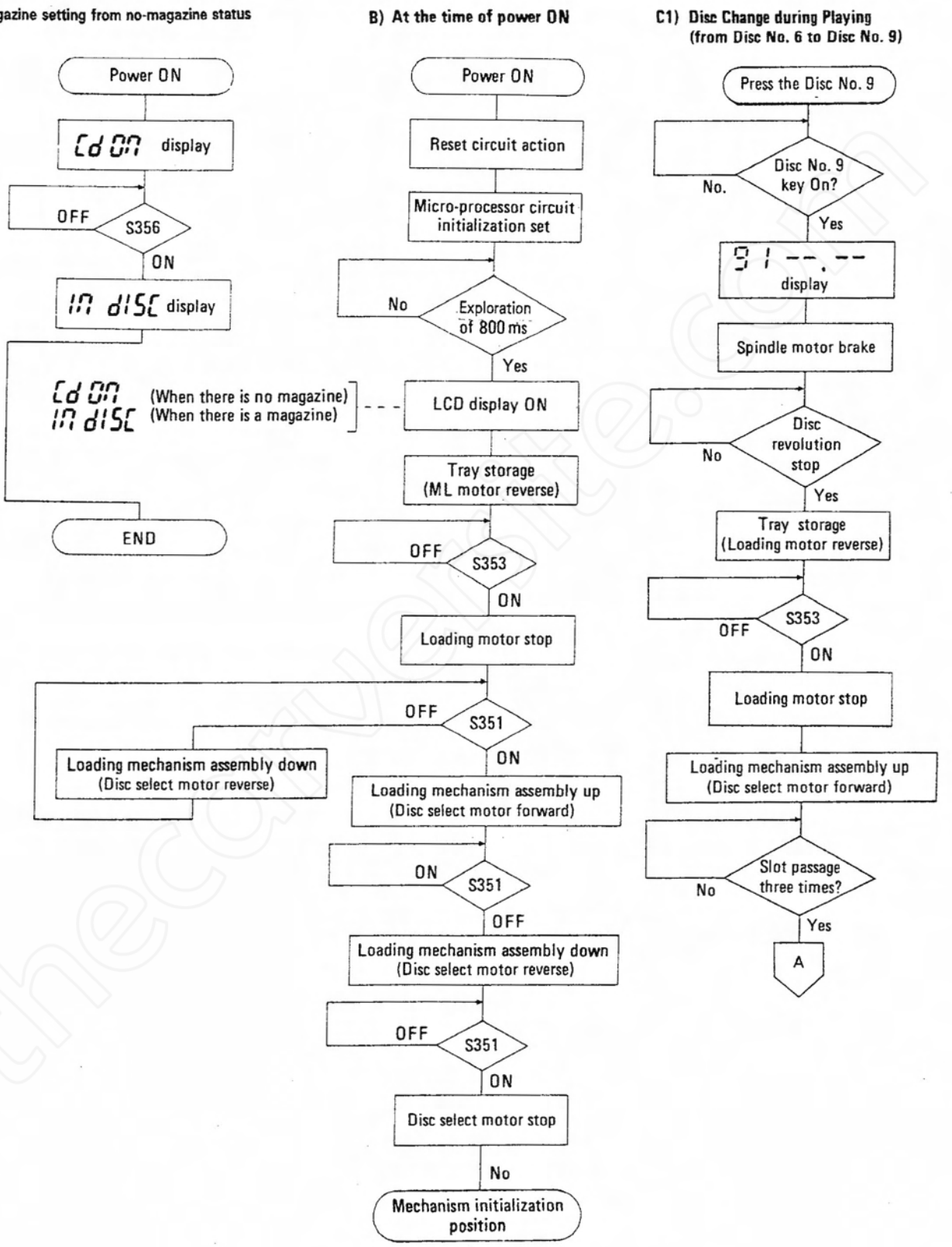

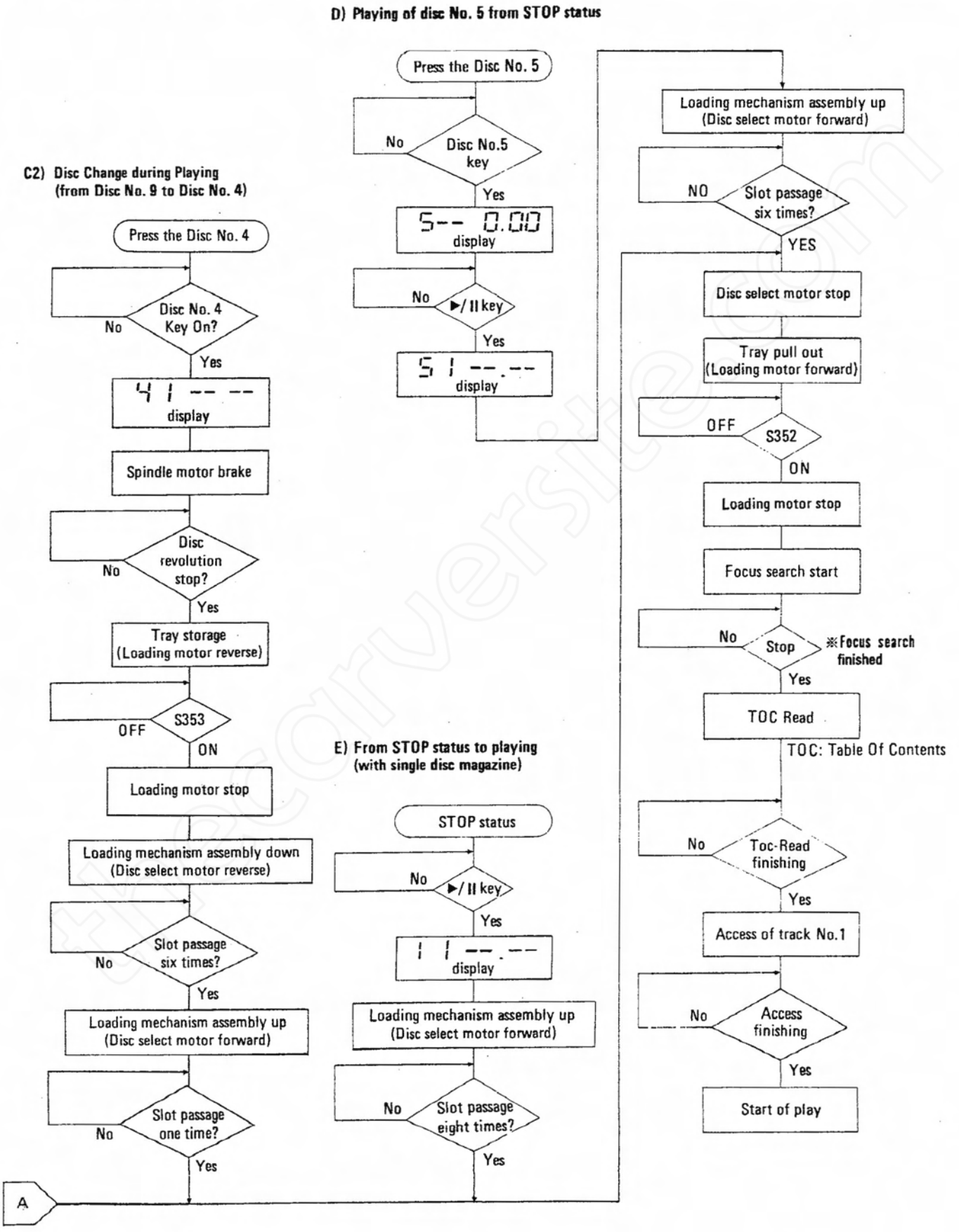
D) Playing of disc No. 5 from STOP status
Press the Disc No. 5
Disc No.5 key
No
Yes
5-- 0.00 display
No
▶/II key
Yes
5 1 --.-- display
C2) Disc Change during Playing (from Disc No. 9 to Disc No. 4)
Press the Disc No. 4
Disc No. 4 Key On?
No
Yes
4 1 -- -- display
Spindle motor brake
Disc revolution stop?
No
Yes
Tray storage (Loading motor reverse)
S353
OFF
ON
Loading motor stop
Loading mechanism assembly down (Disc select motor reverse)
Slot passage six times?
No
Yes
Loading mechanism assembly up (Disc select motor forward)
Slot passage one time?
No
Yes
A
E) From STOP status to playing (with single disc magazine)
STOP status
No
▶/II key
Yes
1 1 --.-- display
Loading mechanism assembly up (Disc select motor forward)
Slot passage eight times?
No
Yes
Loading mechanism assembly up (Disc select motor forward)
Slot passage six times?
NO
YES
Disc select motor stop
Tray pull out (Loading motor forward)
S352
OFF
ON
Loading motor stop
Focus search start
Stop
No
※Focus search finished
Yes
TOC Read
TOC: Table Of Contents
Toc-Read finishing
No
Yes
Access of track No.1
Access finishing
No
Yes
Start of play

F) From playing to EJECT

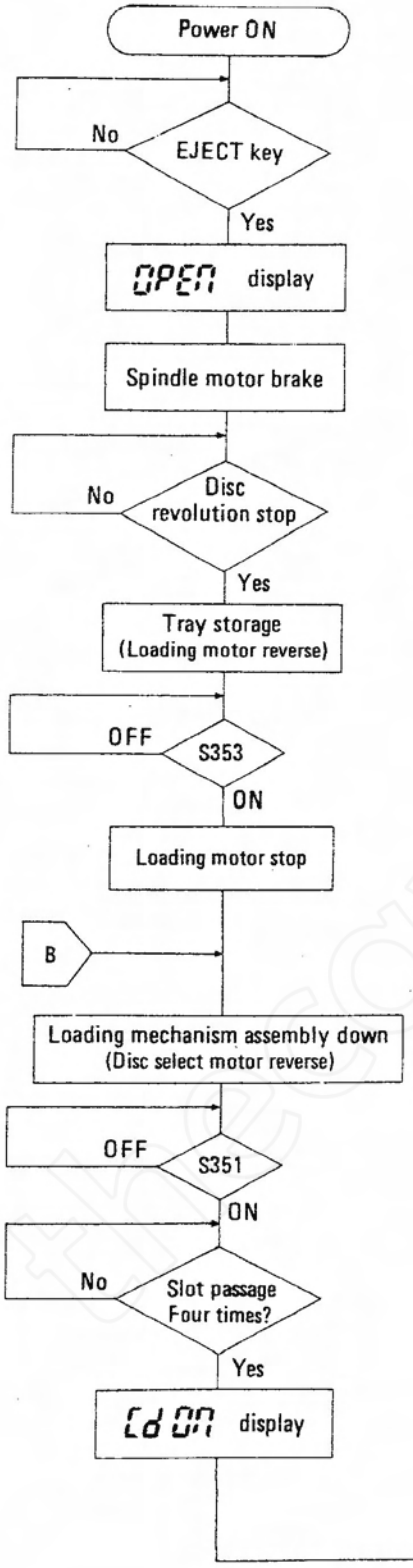

G) From playing to STOP

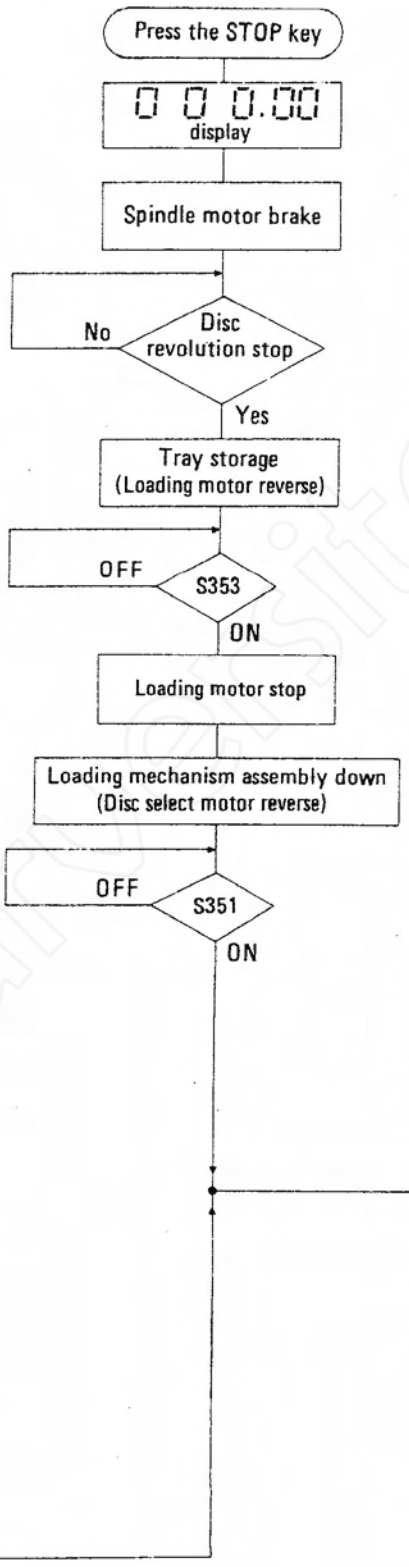

H) Magazine pull-out from STOP status (mechanism initialization position)

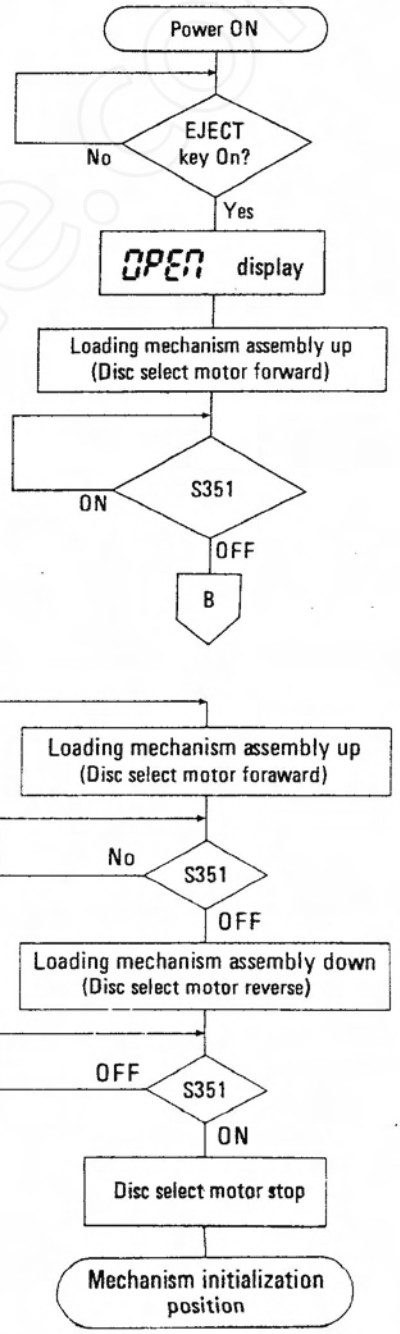

A. Operation

Prepare a Magazine for 10 discs.

1. Set the power switch to ON. Switch Z becomes to ON. (to reset).
2. At the time of Magazine insertion, set the Magazine so that the front edge of the Magazine comes into contact with the Magazine trip pin A and turns the lever B.
3. During insertion of the Magazine, the front right corner of the Magazine sets the switch C (Magazine existence detection) and the switch D (selection of single-disc or 10-disc Magazine) to ON.
   * Switch D will not be switched ON when a single-disc Magazine is inserted.
4. When the Magazine is inserted all the way into the mechanism, the lock lever E enters into the square hole at the right side of the Magazine, the Magazine is locked, and the switch F is switched ON.

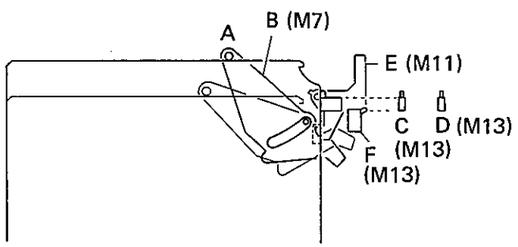

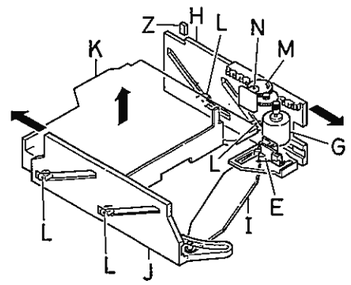

7. After matching of the height of the loading chassis K with the height of the Magazine tray, the tray pull-out motor (loading motor) O starts to run.
8. The tray pull-out motor O drives the cam gear P, the tray pull-out gear Q.

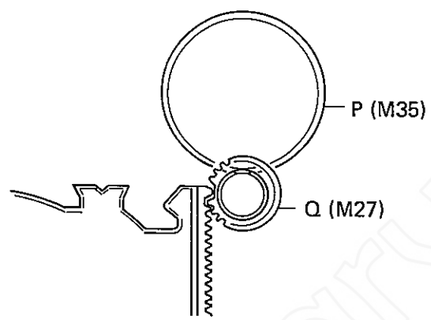

5. When the play button is depressed (for example for the disc No. 1), the disc selection motor G runs, and the slide H on the right side is moved via gear, rack, etc. to the front of the set.
6. When the slide H moves to the front, the slide J on the left side is moved to the rear via the lever I, and the loading chassis is moved upwards by the engagement of the four shafts L with the loading chassis K with the diagonal grooves of the slide.
   * The rise distance of the loading chassis K is decided by the number of revolutions of the gear M.
   * The number of gear revolution is counted by the photosensor N by means of the two square holes in the gear. (The loading chassis rises by one disc per ½ turn of the gear M.)

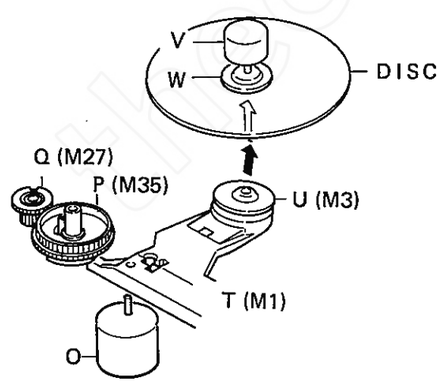

9. The specified tray in the Magazine is pulled out by the tray pull-out gear Q, and the disc on the tray is brought to the play position.
10. Afterwards, the chuck lever T is pushed up by the cam of the revolving cam gear P, the disc is clamped by the chuck pulley U and the TURN TABLE W installed on the spindle motor V, the chucking completion switch X becomes ON at the rotation end of the cam gear P.

● **Operation at the time of stop**

B. The operations 1 to 10 are executed reversely (motor operation in opposite direction), the tray is stored in the Magazine, the switch Y for completion of tray storage in the Magazine becomes ON at the opposite revolution end of the cam gear, the loading chassis returns to the bottom position (standby position), and the stop operation is completed.

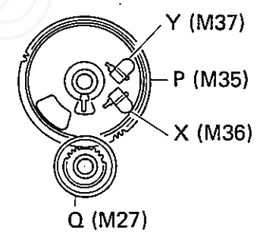

C. Operation at the time of ejection

The motor G runs in opposite direction of the time of play, the slide H at the right side moves to the rew, the slide lever H disengages the magazine lock lever E, and the Magazine is ejected by the trip pin A.

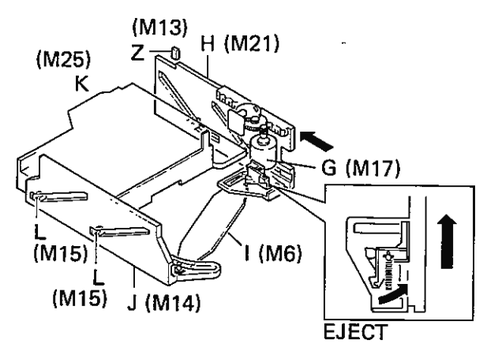

D. Timing matching for the pear relation

1. When the cam gear part (P, Q) has removed once, the timing between (P) and Q must be matched again according to the following procedure.
   (1) Match the part without gear of (Q) with the part without gear of the large gear part of the gear P. Don't damage to SW (X) when to insert the gear.
   (2) After the above matching, fix with screw.

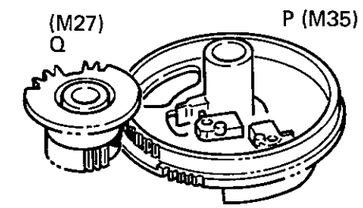

2. Couple to upper gear and lower gear. Couple to the long ditch of the gear R and the long tooth of the slide M.

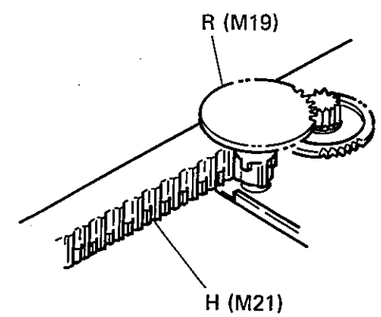

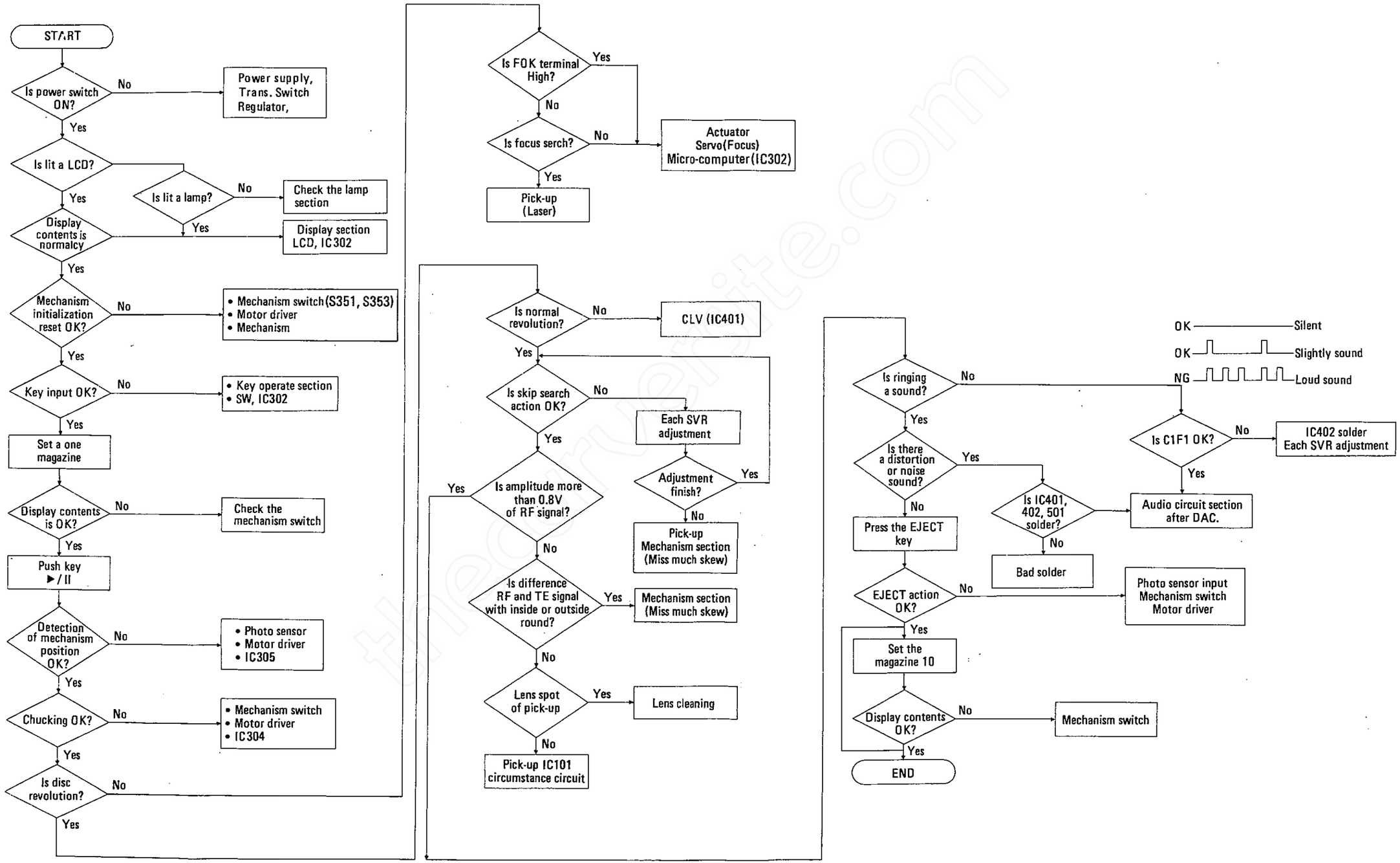

Printed in Japan

Jan./'90/1000 KM