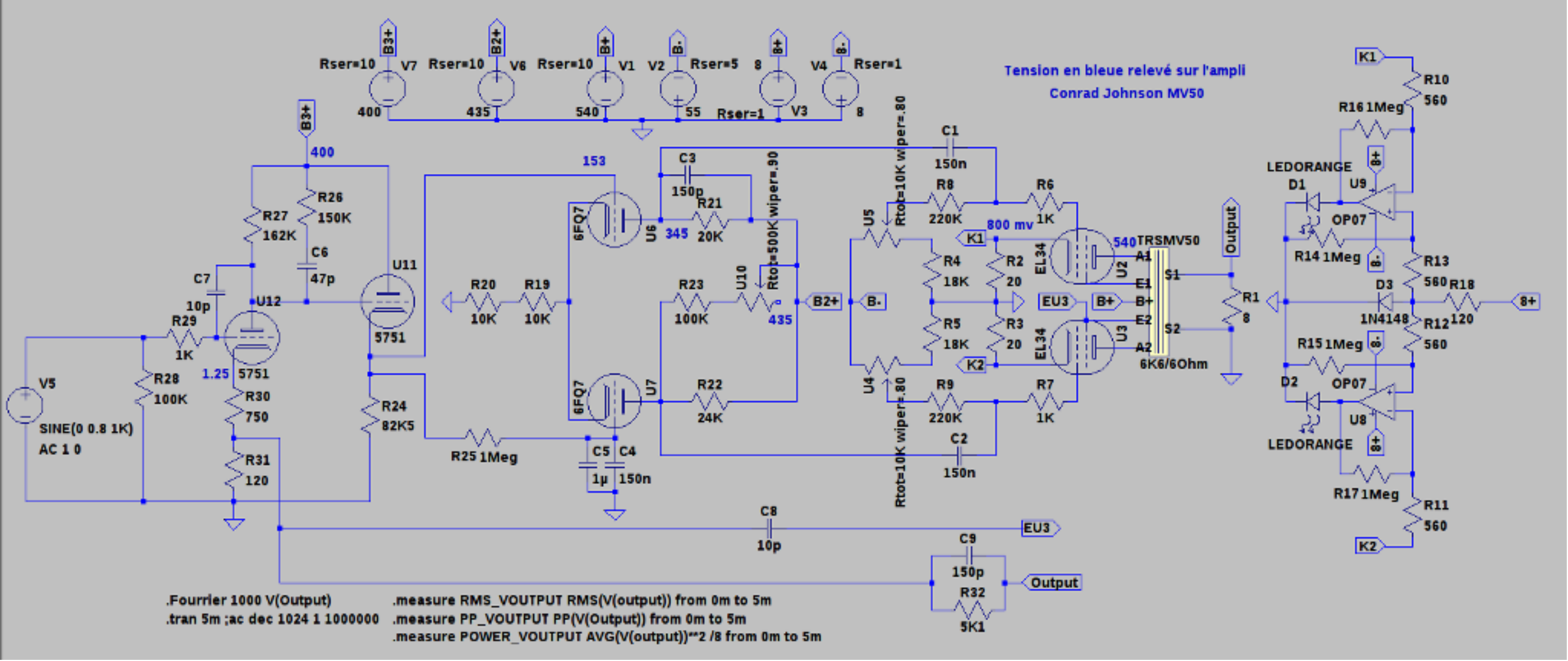
Tension en bleue relevé sur l'ampli
Conrad Johnson MV50
B3+
B2+
B+
B-
8+
8-
Rser=10
V7
400
Rser=10
V6
435
Rser=10
V1
540
V2
Rser=5
55
Rser=1
V3
8
V4
Rser=1
8
400
R26
150K
R27
162K
C6
47p
C7
10p
U12
R29
1K
V5
SINE(0 0.8 1K)
AC 1 0
R28
100K
1.25
5751
R30
750
R31
120
U11
5751
R24
82K5
153
C3
150p
R21
20K
6FQ7
U6
345
R20
10K
R19
10K
R25 1Meg
C5
1µ
C4
150n
6FQ7
U7
R23
100K
U10
Rtot=500K wiper=.90
435
R22
24K
B2+
B-
C8
10p
EU3
C9
150p
R32
5K1
Output
.Fourrier 1000 V(Output)
.tran 5m ;ac dec 1024 1 1000000
.measure RMS_VOUTPUT RMS(V(output)) from 0m to 5m
.measure PP_VOUTPUT PP(V(Output)) from 0m to 5m
.measure POWER_VOUTPUT AVG(V(output))**2 /8 from 0m to 5m
U5
Rtot=10K wiper=.80
C1
150n
R8
220K
R6
1K
800 mv
K1
R4
18K
R2
20
EL34
U2
540
TRSMV50
A1
E1
B+
E2
A2
S1
S2
6K6/6Ohm
EU3
B+
R5
18K
R3
20
EL34
U3
K2
U4
Rtot=10K wiper=.80
R9
220K
R7
1K
C2
150n
Output
R1
8
K1
R10
560
R16 1Meg
LEDORANGE
D1
U9
OP07
R14 1Meg
R13
560
D3
1N4148
R18
120
8+
R12
560
R15 1Meg
D2
OP07
U8
LEDORANGE
R17 1Meg
R11
560
K2