CREST AUDIO

Schematic set

CK Series power amplifiers

1. CKS100 Main board
2. CKS200 Main board
3. CKS400 Main board
4. CKS800 Main board
5. CKS800 Booster board
6. CKS800-2 Main board
7. CKS 800-2 H-class booster board
8. CKS1200-2 Preamp

9. CKV100 Main board
10. CKV200 Main board
11. CKV400 Main board
12. CKV800 Main board
13. CKV800 Booster board

14. CKX150 Main board
15. CKX300 Main board
16. CKX500 Main board
17. CKX800 Main board
18. CKX Output transformer compensation EQ
19. CKX Output transformer wiring

20. Preamp CKS1600-2,CKV1600, CKV2400 Schematic 1
21. Preamp CKS1600-2,CKV1600, CKV2400 Schematic 2
22. Preamp CKS1600-2,CKV1600, CKV2400 Schematic 3
23. Preamp CKS1600-2,CKV1600, CKV2400 Schematic 4

24. Output module CKS1200-2, CKS1600-2, CKV1600, CKV2400

25. Display board for CKS/CKV 100, 200, 400, 800, CKX 150, 300, 500, 800
26. Display board for CKS1200-2, CKS1600-2, CKV1600, CKV2400
27. Zobel board - All models
28. Power supply CKS1200-2, CKS1600-2, CKV1600, CKV2400
29. Fan driver CKS1200-2, CKS1600-2, CKV1600, CKV2400

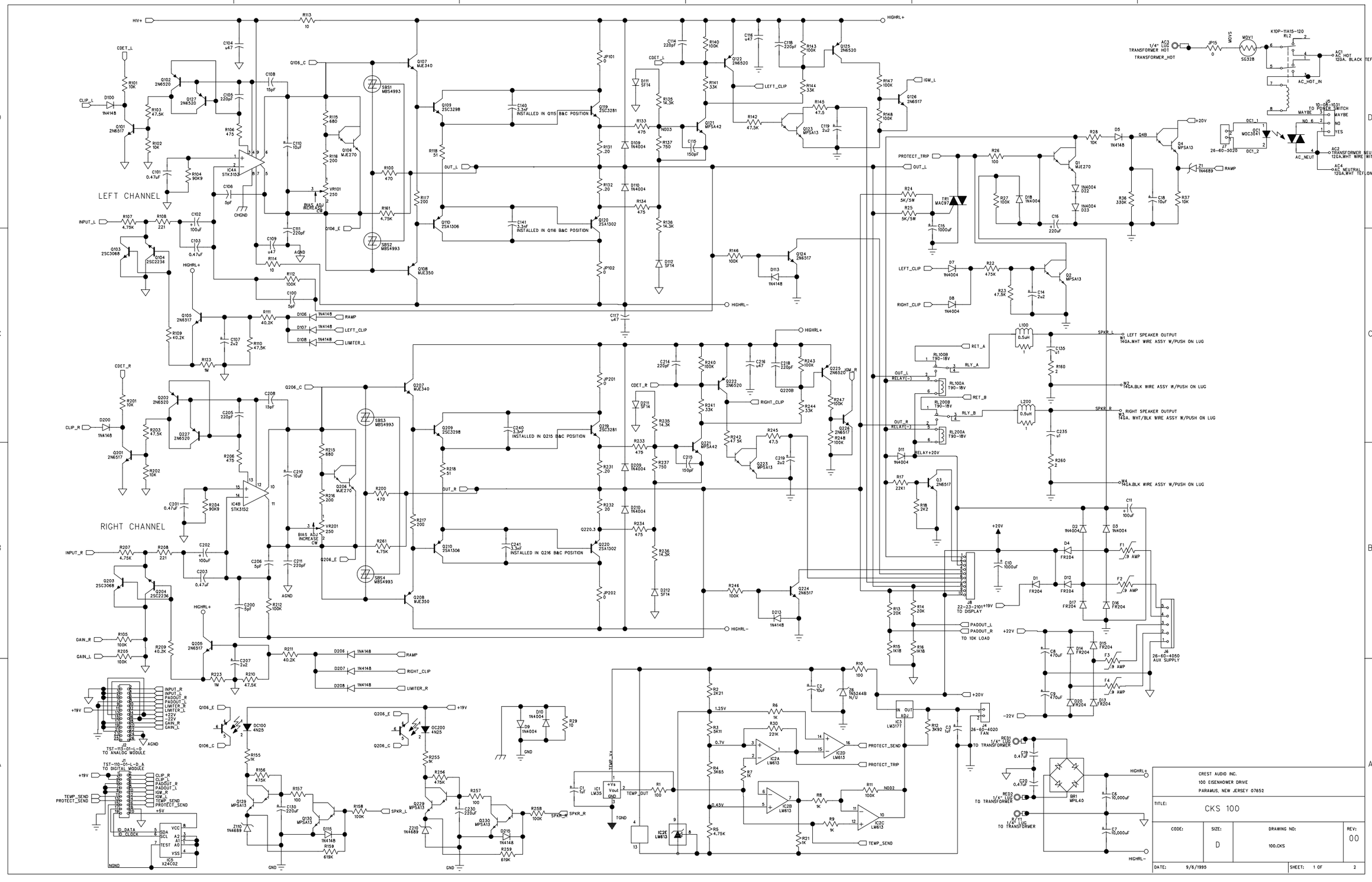
LEFT CHANNEL
RIGHT CHANNEL
CREST AUDIO INC.
100 EISENHOWER DRIVE
PARAMUS, NEW JERSEY 07652
TITLE:
CKS 100
CODE:
SIZE:
D
DRAWING NO:
100.CKS
REV:
00
DATE:
9/6/1995
SHEET:
1 OF
2

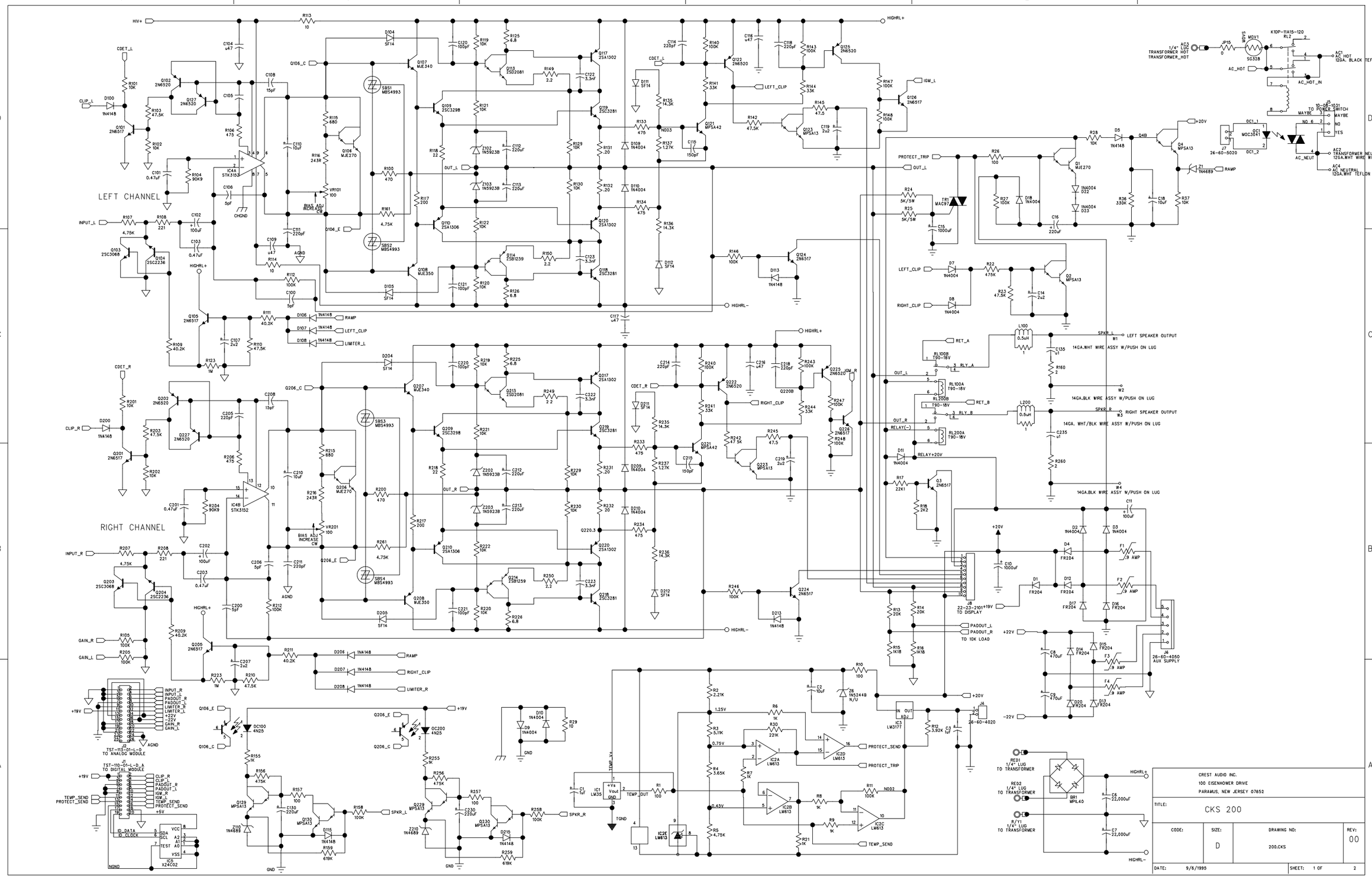
LEFT CHANNEL
RIGHT CHANNEL
CREST AUDIO INC.
100 EISENHOWER DRIVE
PARAMUS, NEW JERSEY 07652
TITLE:
CKS 200
CODE:
SIZE:
D
DRAWING NO:
200.CKS
REV:
00
DATE:
9/6/1995
SHEET:
1 OF
2

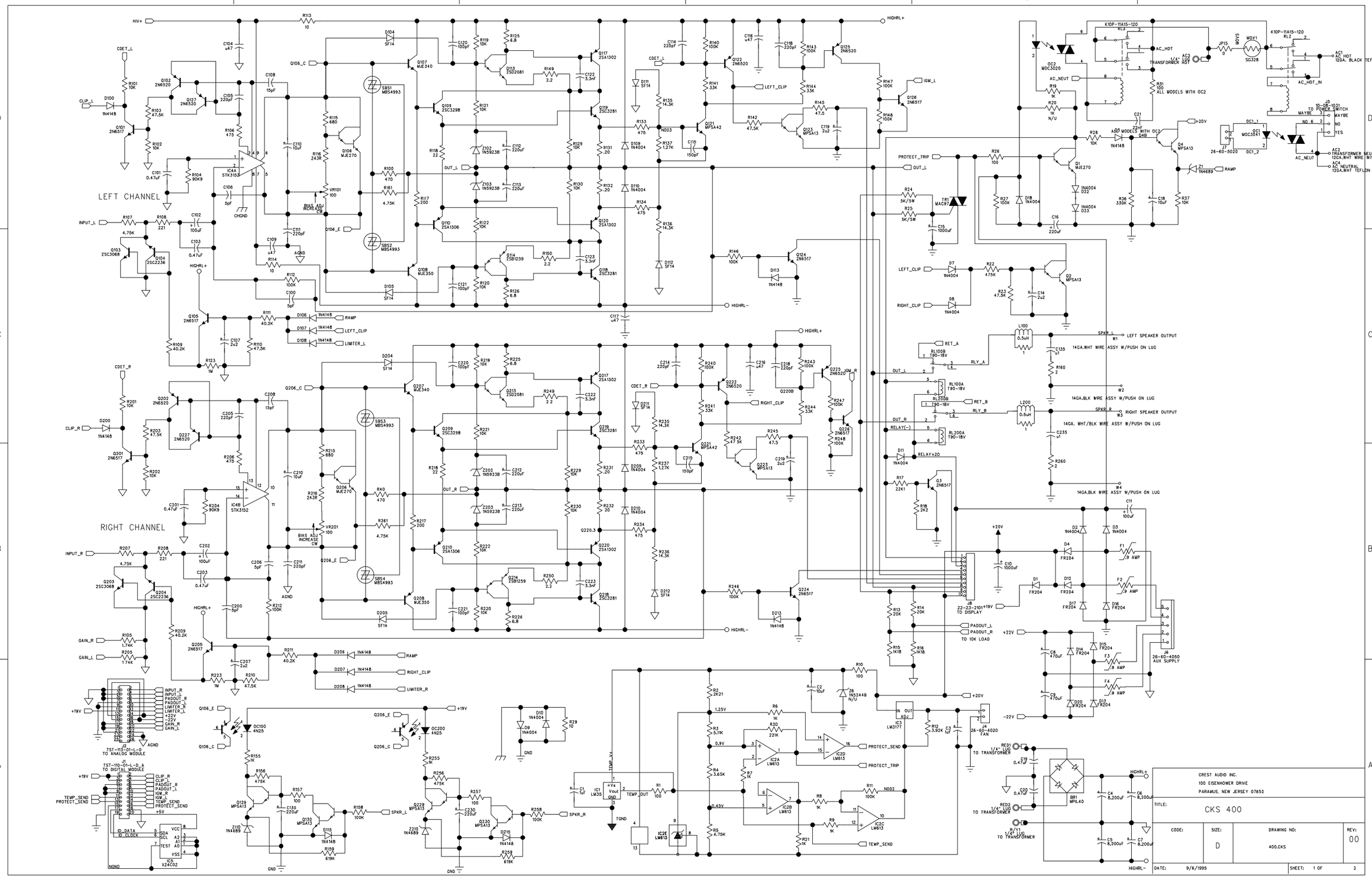
LEFT CHANNEL
RIGHT CHANNEL
CREST AUDIO INC.
100 EISENHOWER DRIVE
PARAMUS, NEW JERSEY 07652
TITLE:
CKS 400
CODE:
SIZE:
D
DRAWING NO:
400.CKS
REV:
00
DATE: 9/6/1995
SHEET: 1 OF 2

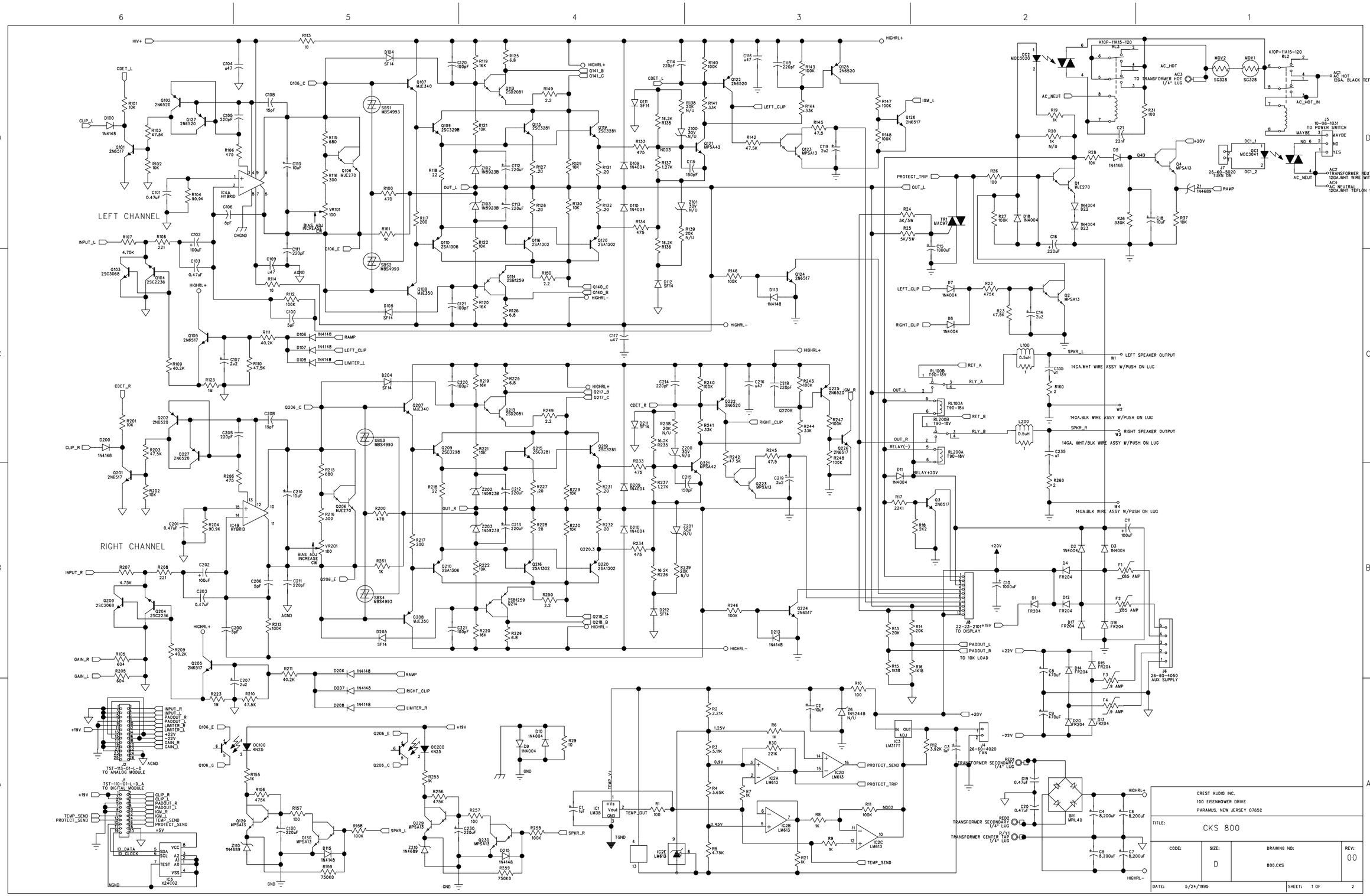
LEFT CHANNEL
RIGHT CHANNEL
CREST AUDIO INC.
100 EISENHOWER DRIVE
PARAMUS, NEW JERSEY 07652
TITLE: CKS 800
CODE:
SIZE: D
DRAWING NO: 800.CKS
REV: 00
DATE: 5/24/1995
SHEET: 1 OF 2

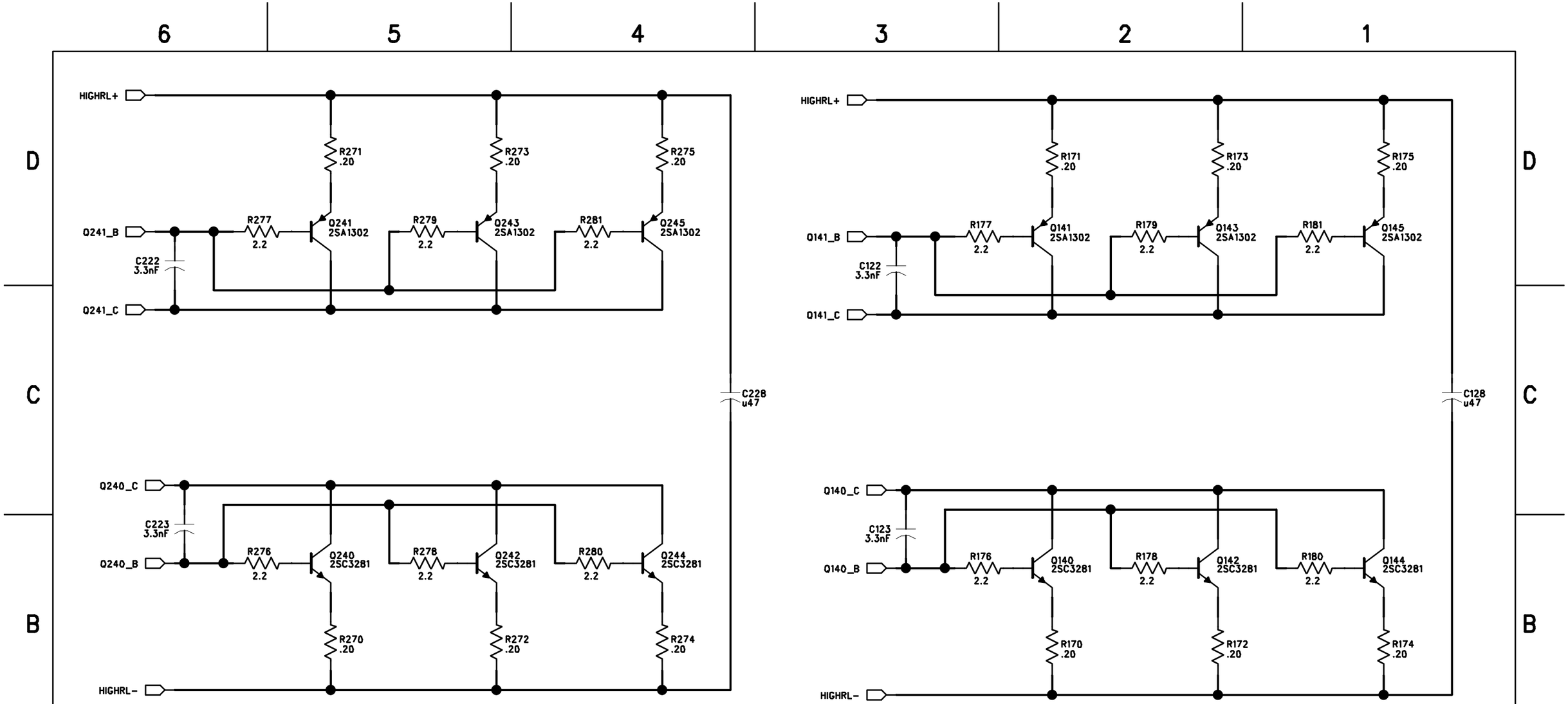

		COMPANY:			
		TITLE: CKS800/THX800 BOOSTER BOARD			
DRAWN:	DATED:				
CHECKED:	DATED:	CODE:	SIZE:	DRAWING NO: BOOST_AB.CKS	REV:
QUALITY CONTROL:	DATED:				
RELEASED:	DATED:	SCALE:		SHEET: OF	

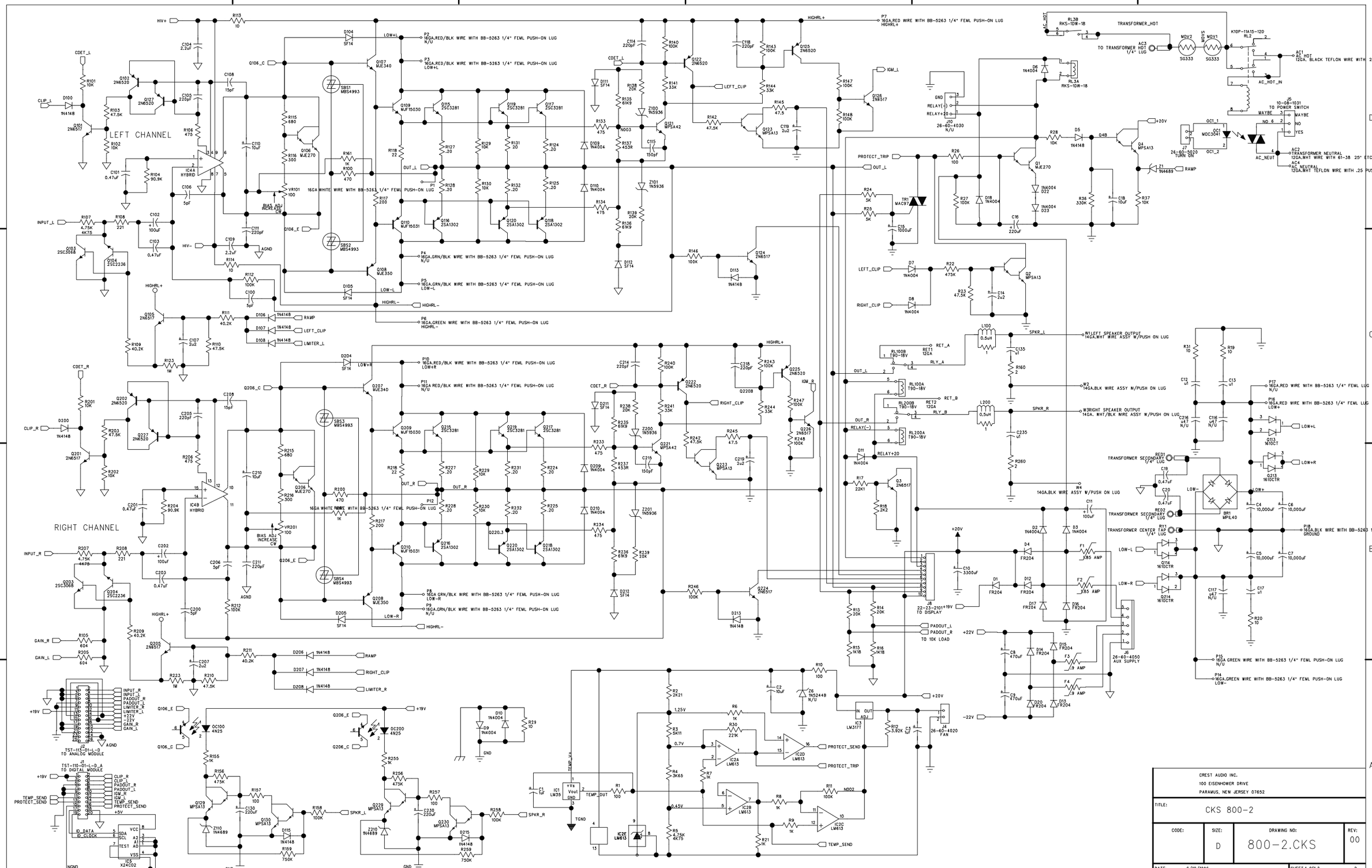

CREST AUDIO INC.
100 EISENHOWER DRIVE
PARAMUS, NEW JERSEY 07652

TITLE: CKS 800-2

CODE:	SIZE:	DRAWING NO:	REV:
	D	800-2.CKS	00

DATE: 6/10/1996 SHEET:1 OF1 2 2

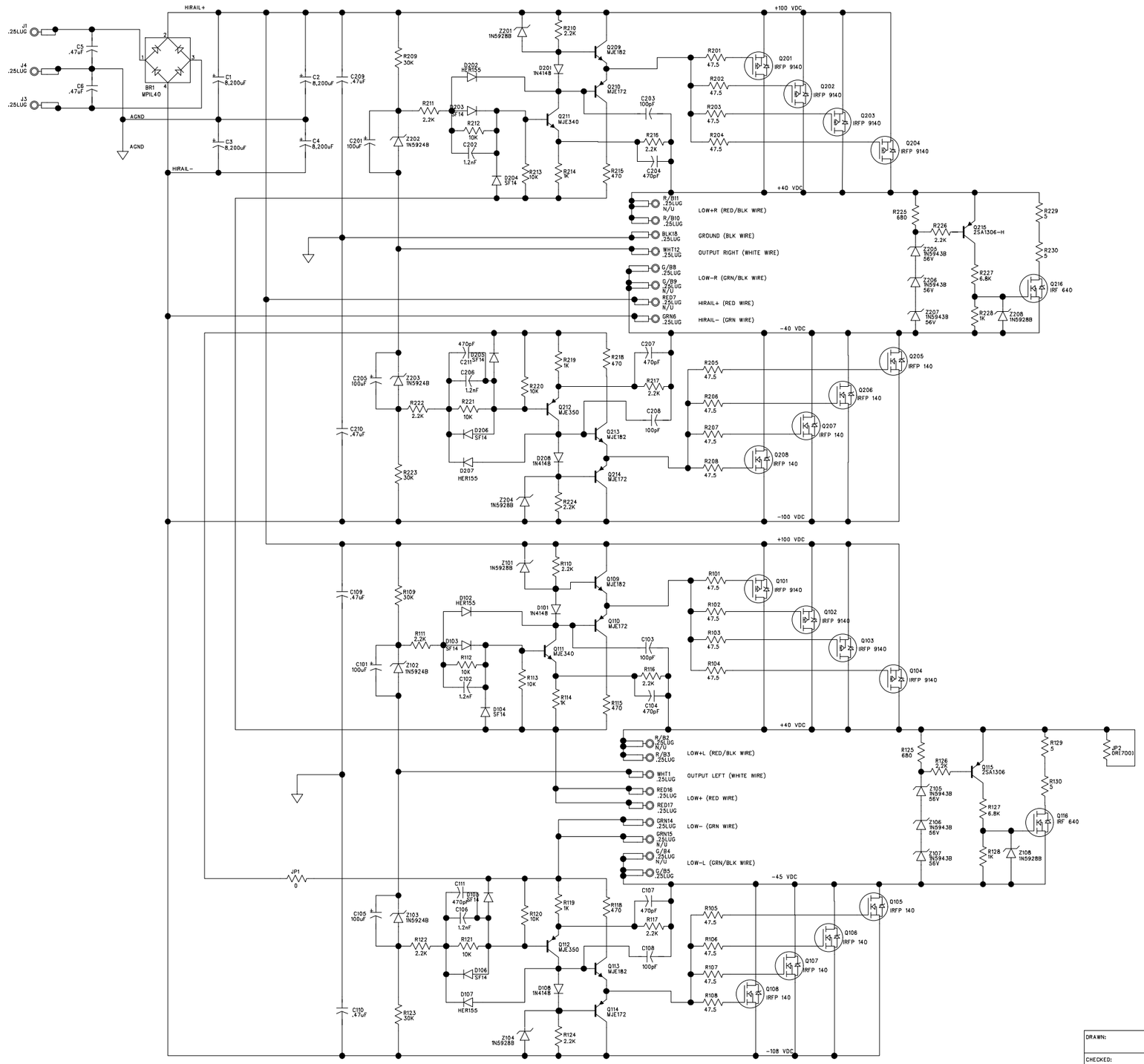

REVISION RECORD			
LTR	ECO NO:	APPROVED:	DATE:

DRAWN:	DATED:	COMPANY:	
		TITLE. CKS800-2 HIGH RAIL	
CHECKED:	DATED:	CODE. / SIZE:	DRAWING NO: 800-2H.CKS / REV: 01
QUALITY CONTROL:	DATED:		
RELEASED:	DATED:	SCALE:	SHEET: 1 OF

REVISION RECORD			
LTR	ECO NO:	APPROVED:	DATE:

GAIN RESISTORS CHANGES PER MODEL

1. MODELS CKV1600, CKV2400 AND CKS1800 RESISTOR VALUE IS 392 OHM.
2. MODEL CKS1200 RESISTOR VALUE IS 402 OHM.

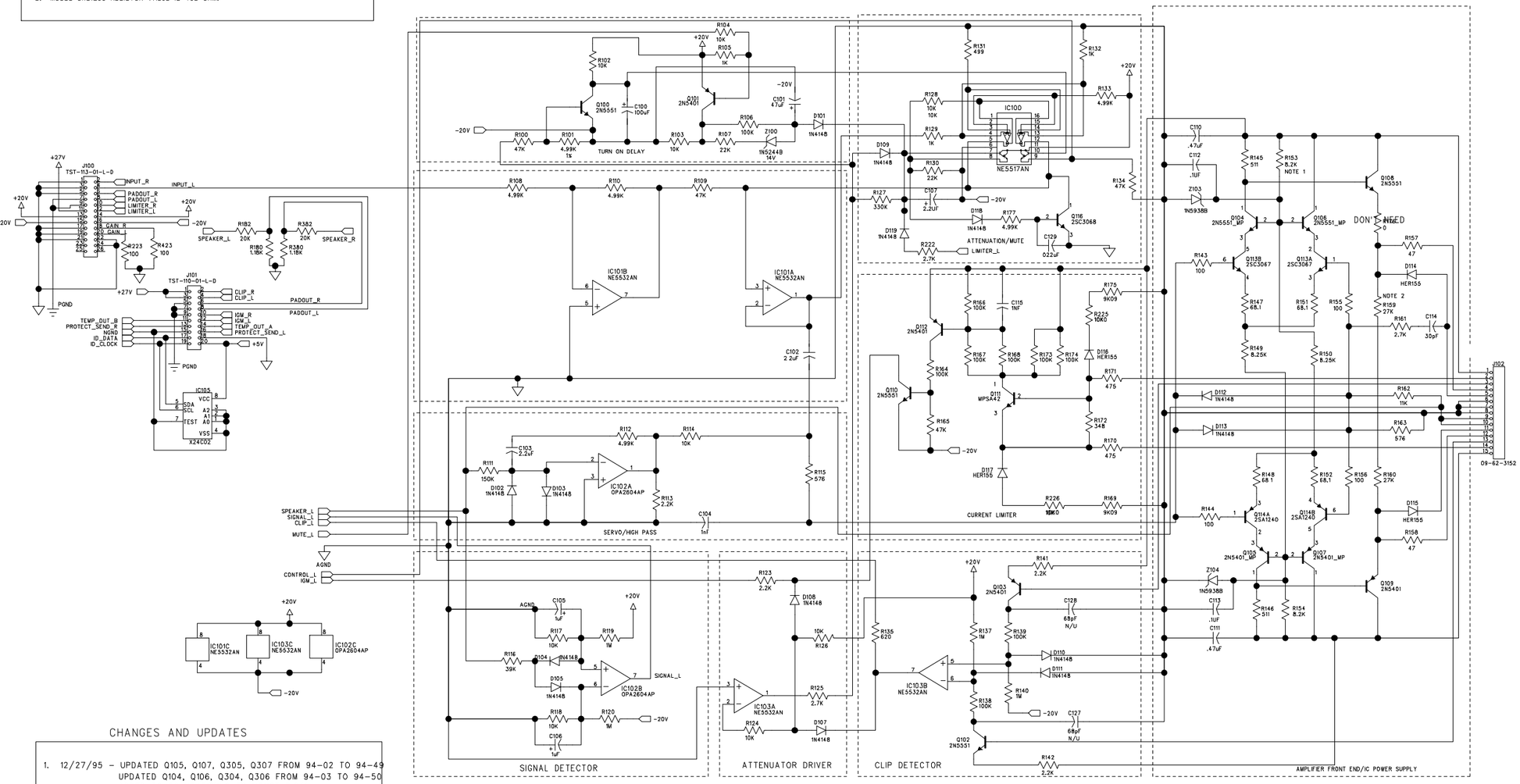

CHANGES AND UPDATES

1. 12/27/95 - UPDATED Q105, Q107, Q305, Q307 FROM 94-02 TO 94-49
   UPDATED Q104, Q106, Q304, Q306 FROM 94-03 TO 94-50
   ADDED TO-92 HEATSINKS TO HOUSE B.O.M.
   DELETED C127, C128, C327, OFF HOUSE B.O.M.
2. 2/5/95- ON CKS1200 R223 AND R423 ARE 402R 1%

CRESTAUDIO

DRAWN:	DATED:	TITLE: HI-POWER CKV/CKS PREAMP (FRONTEND SECTION) (CHANNEL A)	
CHECKED:	DATED:	CODE: / SIZE: / DRAWING NO: 21D2508	REV 03
QUALITY CONTROL:	DATED:		
RELEASED:	DATED:	SCALE:	SHEET: 1 OF 5

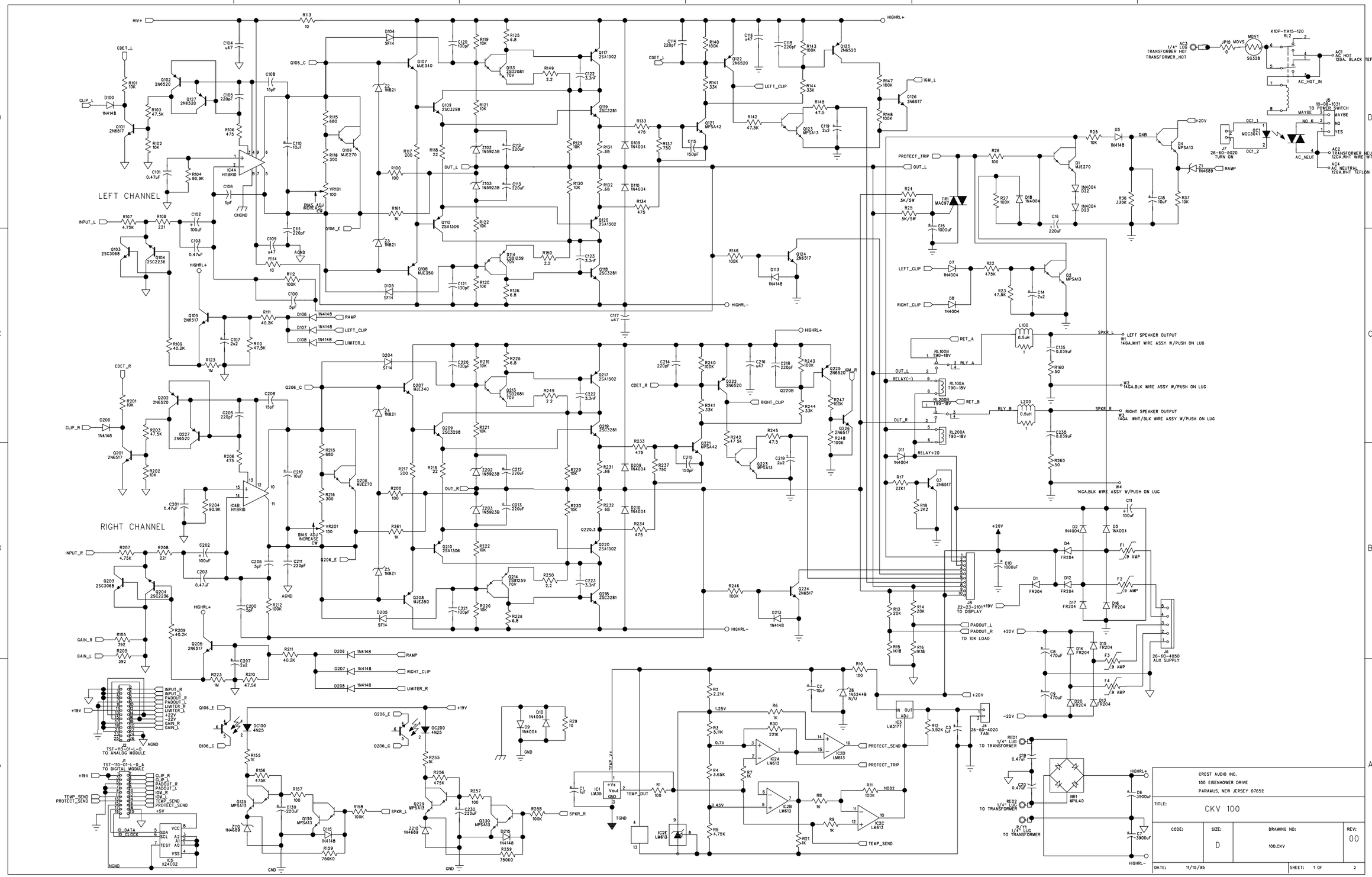
LEFT CHANNEL
RIGHT CHANNEL
CREST AUDIO INC.
100 EISENHOWER DRIVE
PARAMUS, NEW JERSEY 07652
TITLE:
CKV 100
CODE:
SIZE:
D
DRAWING NO:
100.CKV
REV:
00
DATE:
11/15/95
SHEET:
1 OF
2

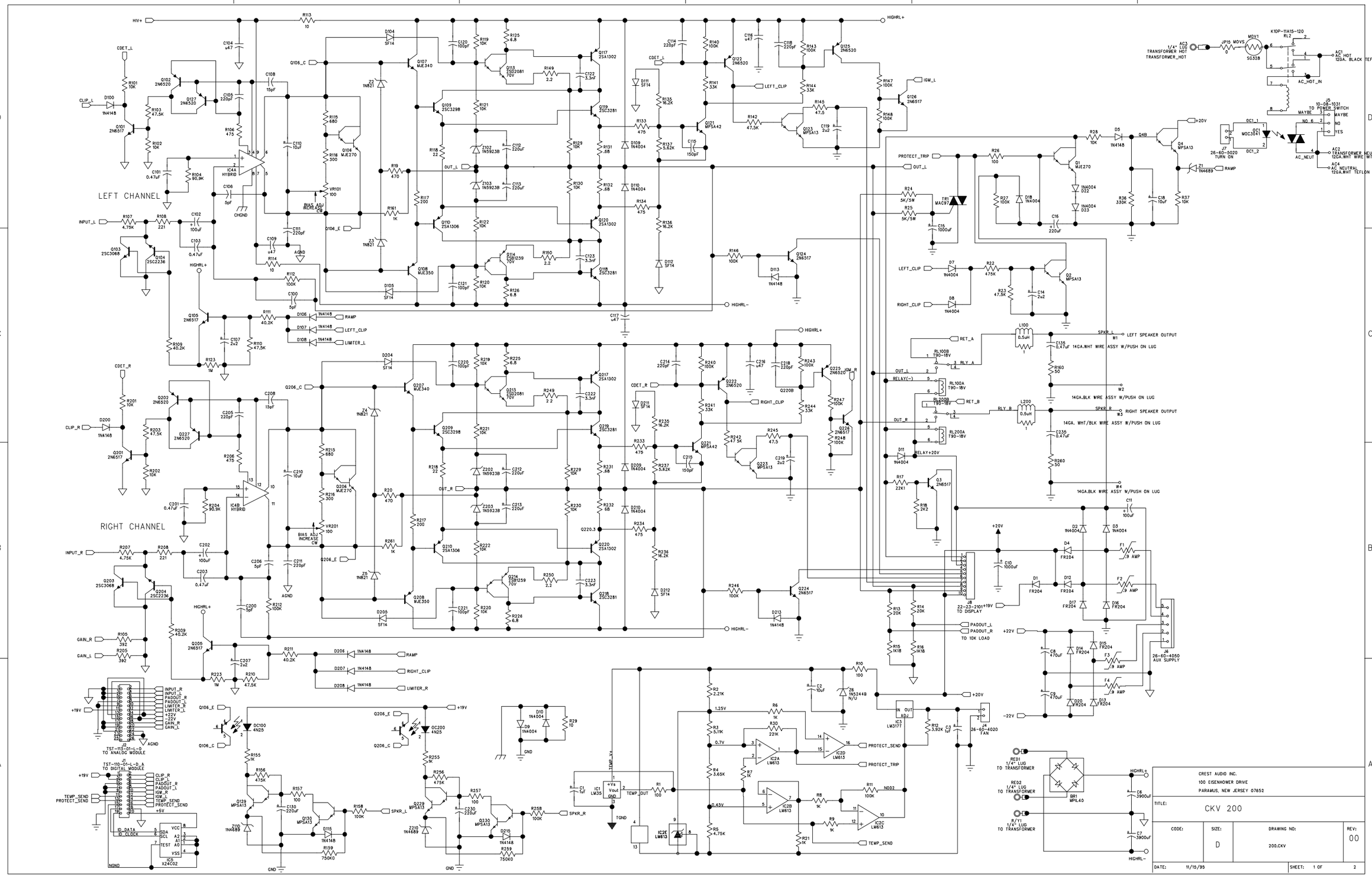
LEFT CHANNEL
RIGHT CHANNEL
CREST AUDIO INC.
100 EISENHOWER DRIVE
PARAMUS, NEW JERSEY 07652
TITLE:
CKV 200
CODE:
SIZE:
D
DRAWING NO:
200.CKV
REV:
00
DATE:
11/15/95
SHEET:
1 OF
2

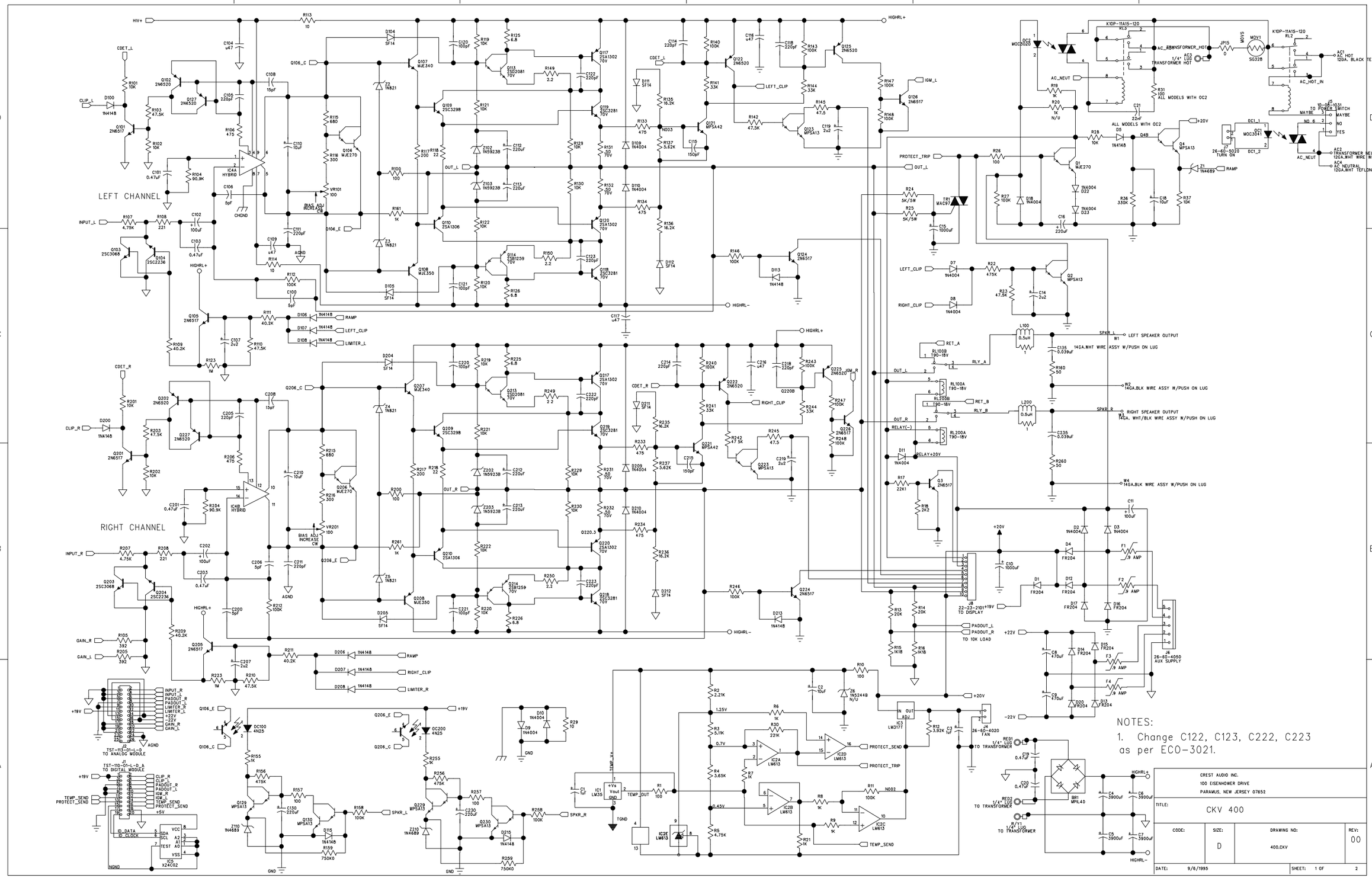
LEFT CHANNEL
RIGHT CHANNEL
NOTES:
1. Change C122, C123, C222, C223 as per ECO-3021.
CREST AUDIO INC.
100 EISENHOWER DRIVE
PARAMUS, NEW JERSEY 07652
TITLE: CKV 400
CODE:
SIZE: D
DRAWING NO: 400.CKV
REV: 00
DATE: 9/6/1995
SHEET: 1 OF 2

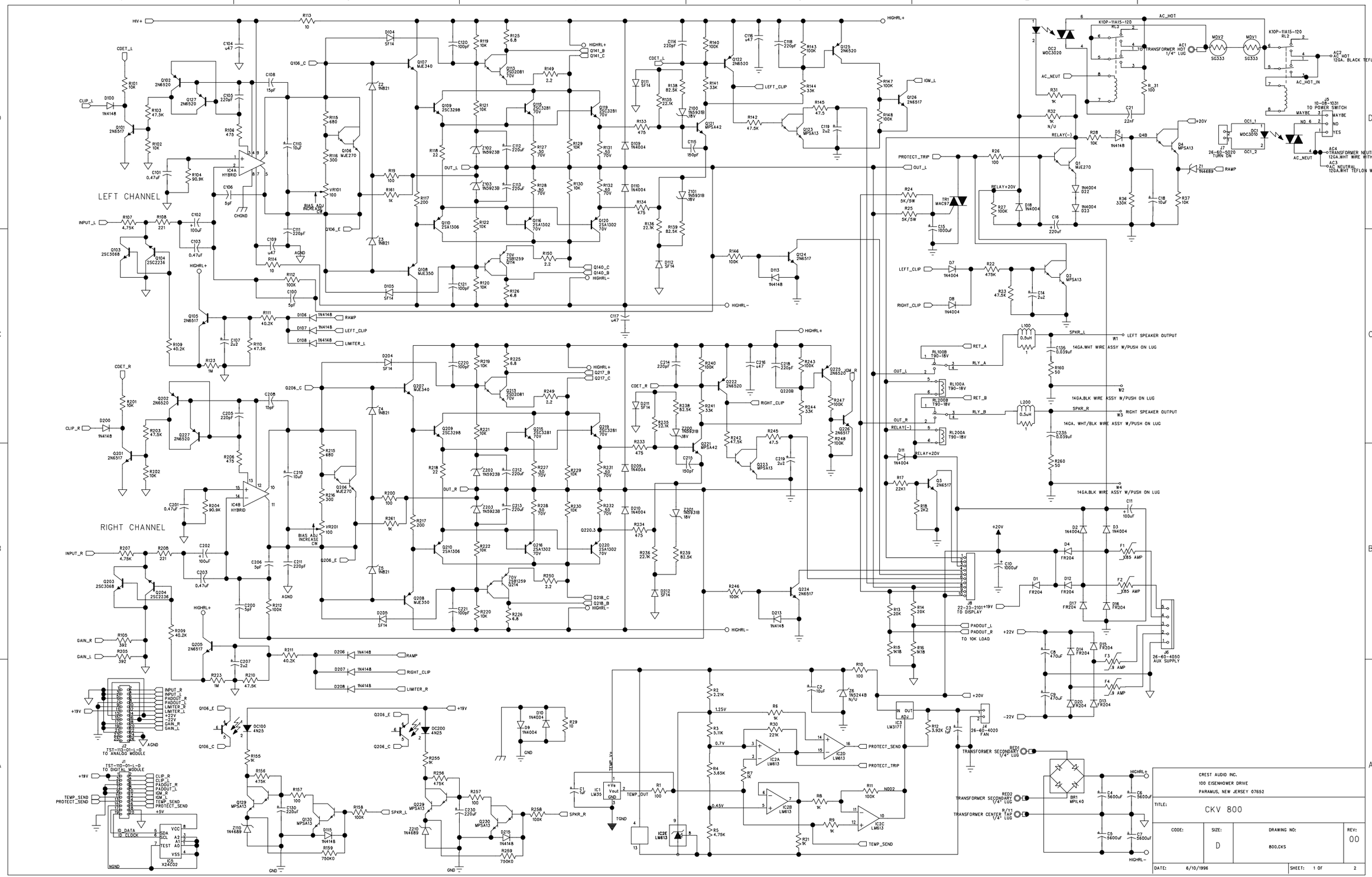
LEFT CHANNEL
RIGHT CHANNEL
CREST AUDIO INC.
100 EISENHOWER DRIVE
PARAMUS, NEW JERSEY 07652
TITLE:
CKV 800
CODE:
SIZE:
D
DRAWING NO:
800.CKS
REV:
00
DATE:
6/10/1996
SHEET:
1 OF
2

REVISION RECORD			
LTR	ECO NO:	APPROVED:	DATE:

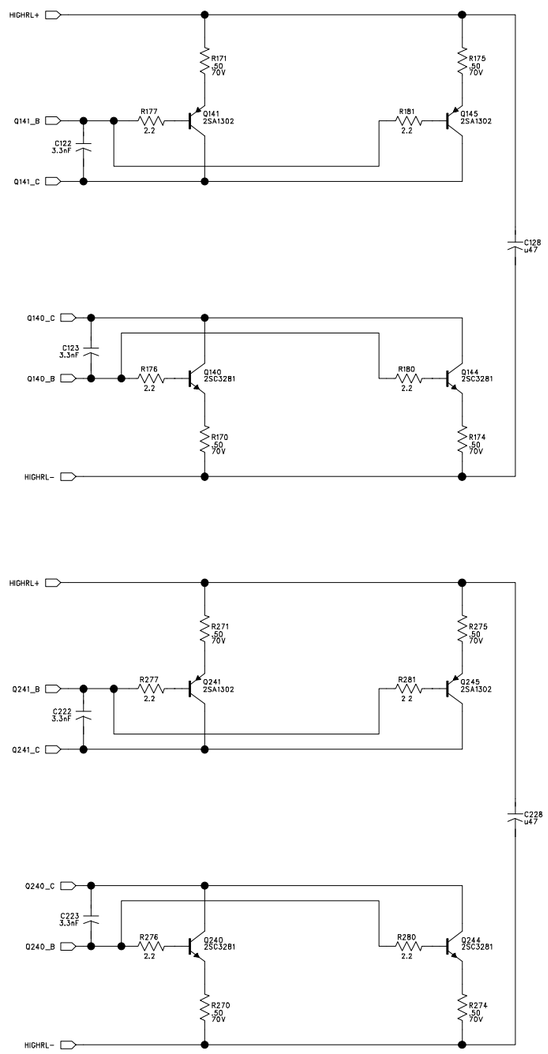

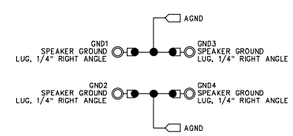

CRESTAUDIO

TITLE. CKV 800 BOOSTER BOARD

DRAWN:	DATED:			
CHECKED:	DATED:	CODE.	SIZE:	DRAWING NO: BOOST_AB.CKV	REV:
QUALITY CONTROL:	DATED:			
RELEASED:	DATED:	SCALE:		SHEET: OF

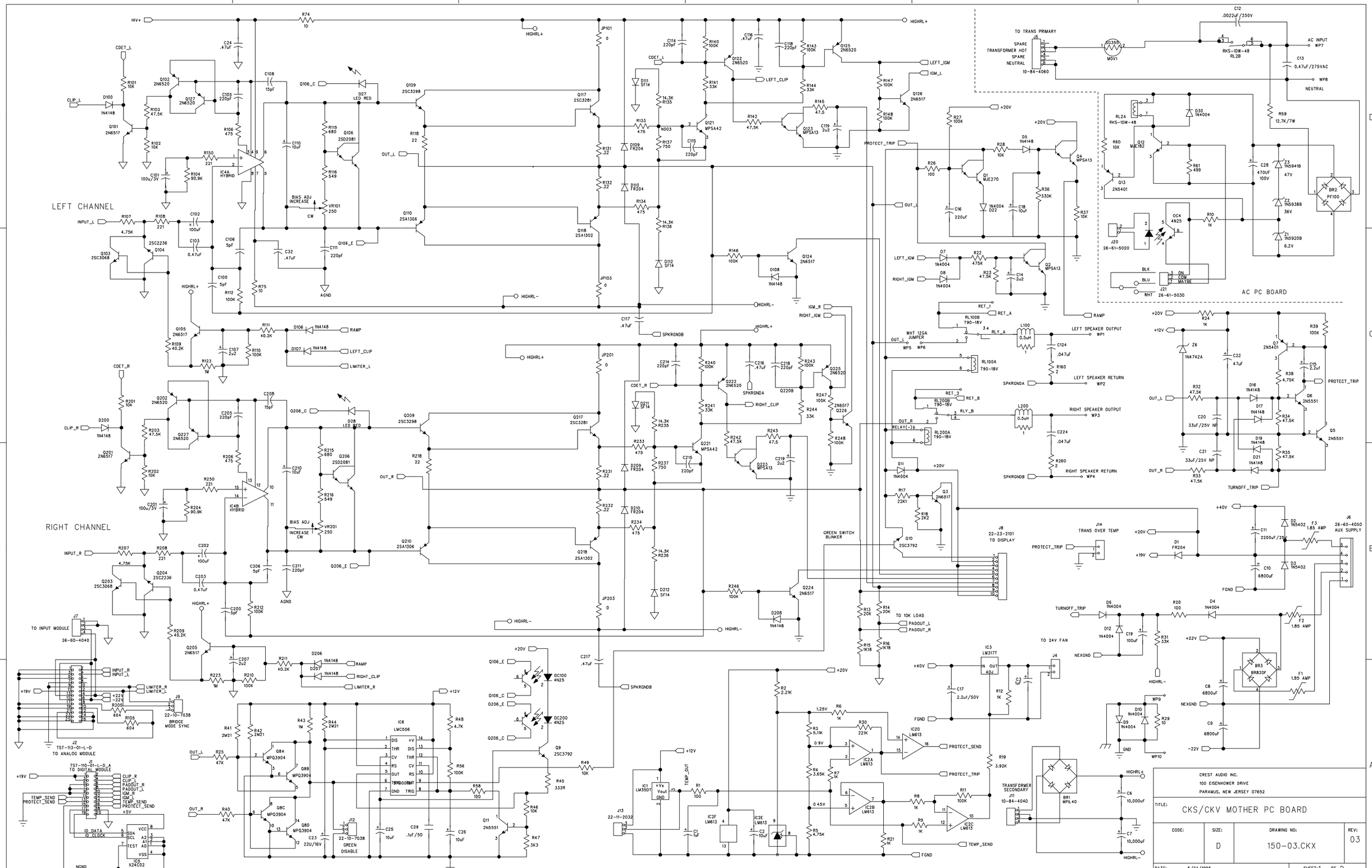
LEFT CHANNEL
RIGHT CHANNEL
AC PC BOARD
CREST AUDIO INC.
100 EISENHOWER DRIVE
PARAMUS, NEW JERSEY 07652
TITLE: CKS/CKV MOTHER PC BOARD
CODE:
SIZE: D
DRAWING NO: 150-03.CKX
REV: 03
DATE: 5/24/1995
SHEET: 1 OF 2

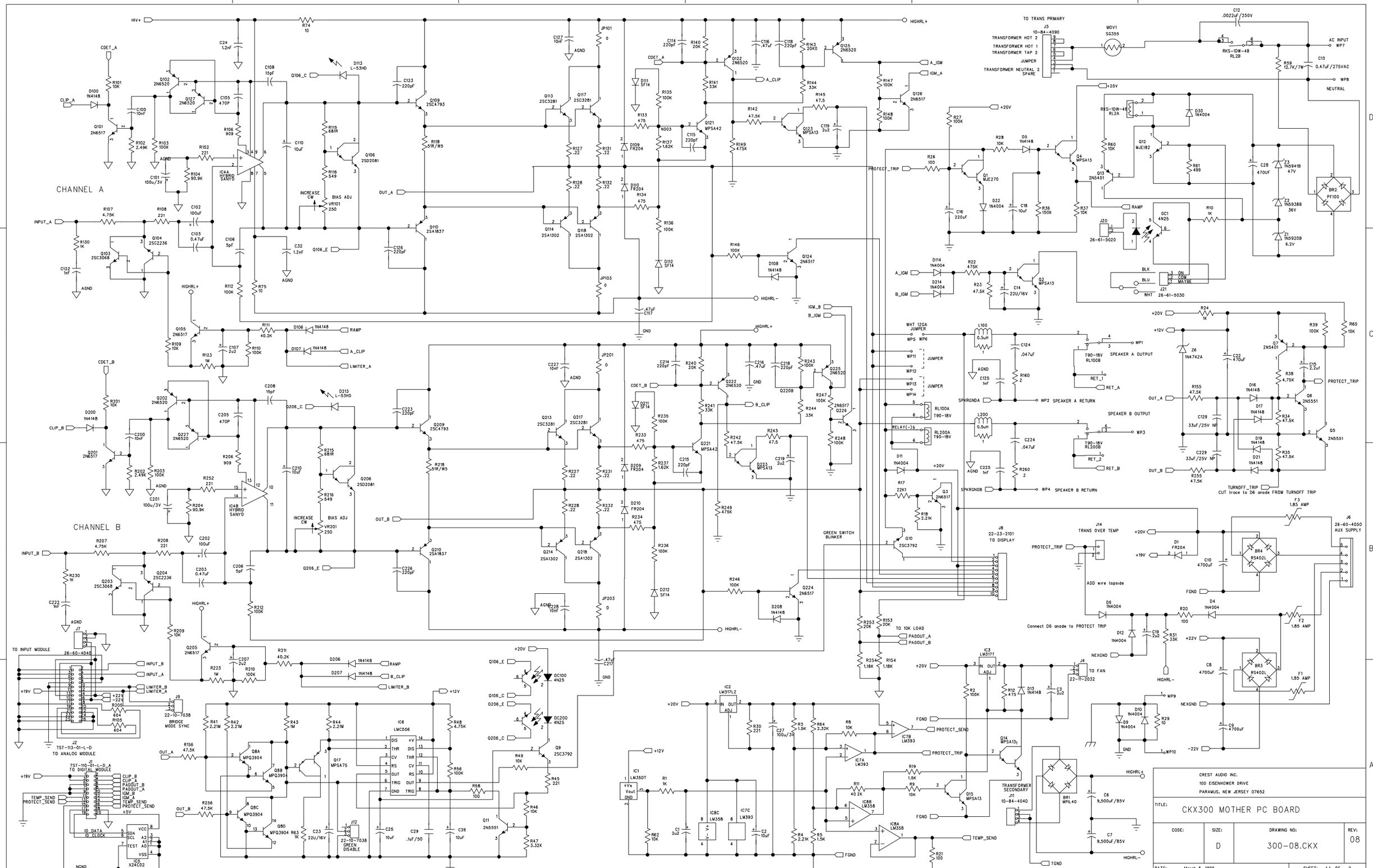
CHANNEL A
CHANNEL B
TO TRANS PRIMARY
AC INPUT
NEUTRAL
SPEAKER A OUTPUT
SPEAKER B OUTPUT
WP2 SPEAKER A RETURN
WP4 SPEAKER B RETURN
TO 10K LOAD
TO DISPLAY
TO FAN
TO INPUT MODULE
TO ANALOG MODULE
TO DIGITAL MODULE
BRIDGE MODE SYNC
GREEN DISABLE
TRANS OVER TEMP
ADD wire topside
Connect D6 anode to PROTECT TRIP
TURNOFF_TRIP
CUT trace to D6 anode FROM TURNOFF TRIP
GREEN SWITCH BLINKER
TRANSFORMER SECONDARY
CREST AUDIO INC.
100 EISENHOWER DRIVE
PARAMUS, NEW JERSEY 07652
TITLE: CKX300 MOTHER PC BOARD
CODE:
SIZE: D
DRAWING NO: 300-08.CKX
REV: 08
DATE: March 5, 1999
SHEET: 11 OF 2

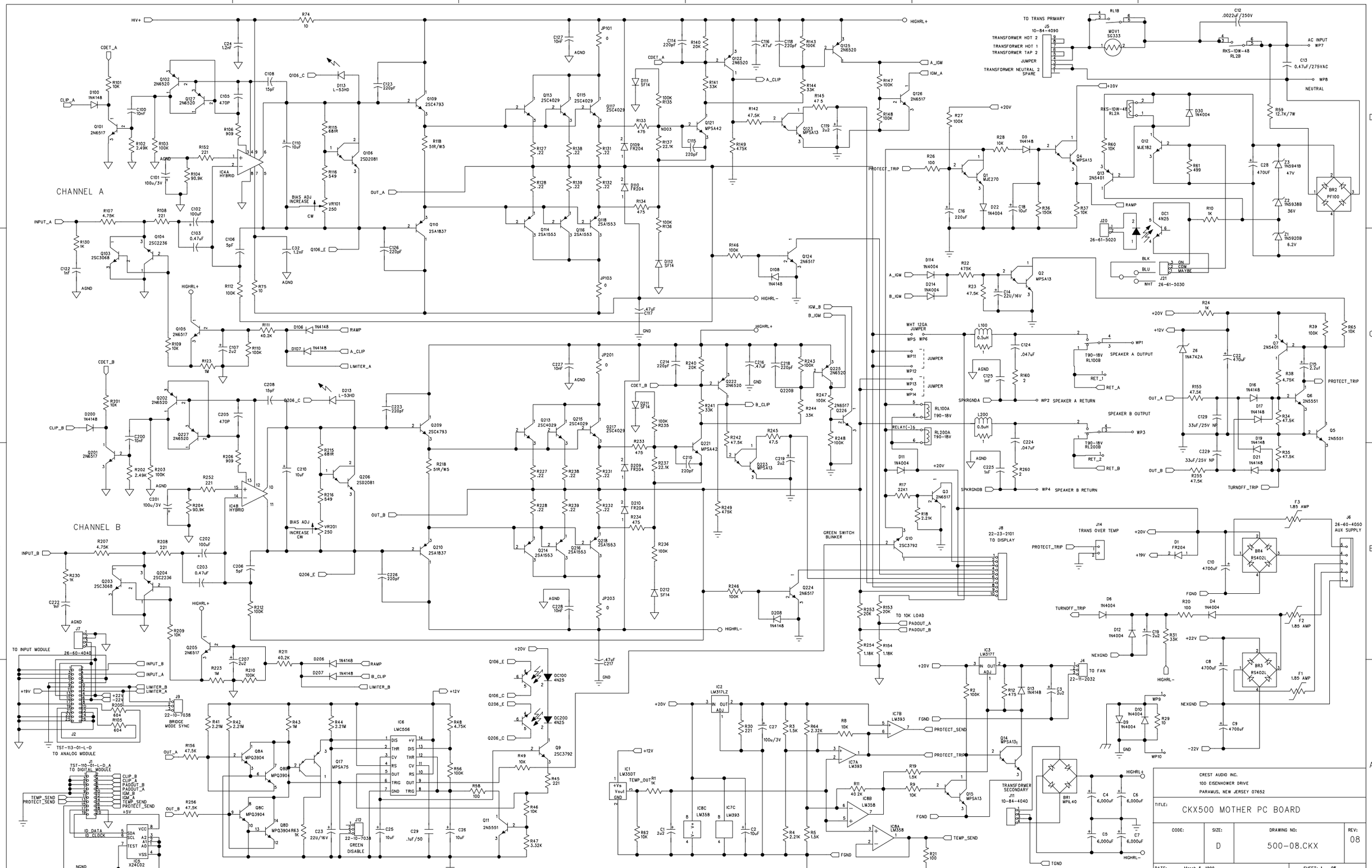
CHANNEL A
CHANNEL B
TO TRANS PRIMARY
J5
10-84-4090
TRANSFORMER HOT 2
TRANSFORMER HOT 1
TRANSFORMER TAP 2
JUMPER
TRANSFORMER NEUTRAL 2
SPARE
AC INPUT
NEUTRAL
SPEAKER A OUTPUT
SPEAKER A RETURN
SPEAKER B OUTPUT
SPEAKER B RETURN
TO DISPLAY
TRANS OVER TEMP
AUX SUPPLY
TO FAN
TO 10K LOAD
TO INPUT MODULE
TO ANALOG MODULE
TO DIGITAL MODULE
BRIDGE MODE SYNC
GREEN DISABLE
GREEN SWITCH BLINKER
TRANSFORMER SECONDARY
CREST AUDIO INC.
100 EISENHOWER DRIVE
PARAMUS, NEW JERSEY 07652
TITLE:
CKX500 MOTHER PC BOARD
CODE:
SIZE:
D
DRAWING NO:
500-08.CKX
REV:
08
DATE:
March 5, 1999
SHEET: 1 OF

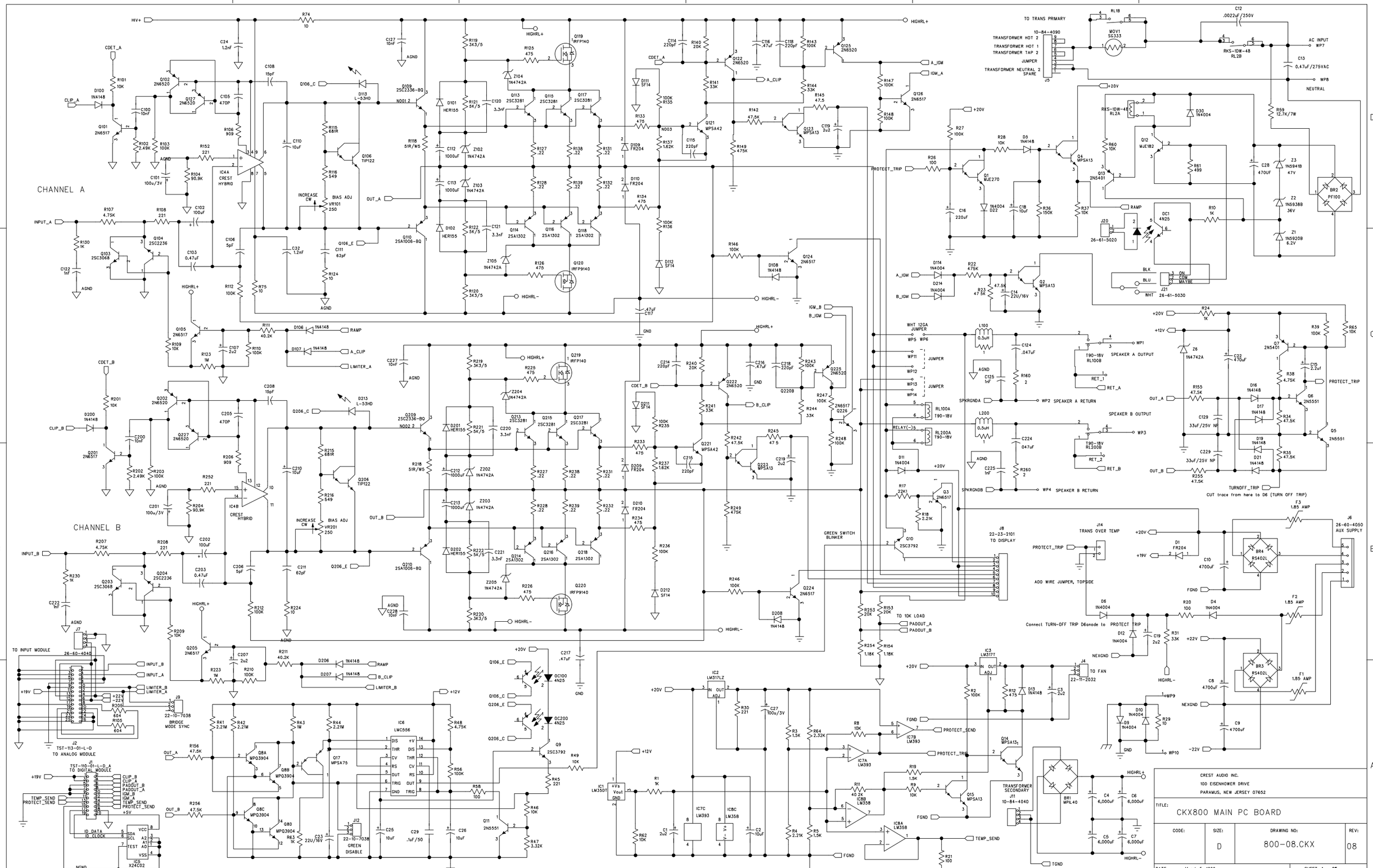
CHANNEL A
CHANNEL B
CREST HYBRID
BIAS ADJ
INCREASE CW
TO TRANS PRIMARY
TRANSFORMER HOT 2
TRANSFORMER HOT 1
TRANSFORMER TAP 2
JUMPER
TRANSFORMER NEUTRAL 2
SPARE
AC INPUT
NEUTRAL
SPEAKER A OUTPUT
SPEAKER A RETURN
SPEAKER B OUTPUT
SPEAKER B RETURN
TRANS OVER TEMP
TO DISPLAY
TO 10K LOAD
TO FAN
TO INPUT MODULE
TO ANALOG MODULE
TO DIGITAL MODULE
BRIDGE MODE SYNC
GREEN DISABLE
GREEN SWITCH BLINKER
ADD WIRE JUMPER, TOPSIDE
Connect TURN-OFF TRIP D6anode to PROTECT TRIP
CUT trace from here to D6 (TURN OFF TRIP)
TRANSFORMER SECONDARY
CREST AUDIO INC.
100 EISENHOWER DRIVE
PARAMUS, NEW JERSEY 07652
TITLE: CKX800 MAIN PC BOARD
CODE:
SIZE: D
DRAWING NO: 800-08.CKX
REV: 08
DATE: March 5, 1999
SHEET: 1 OF

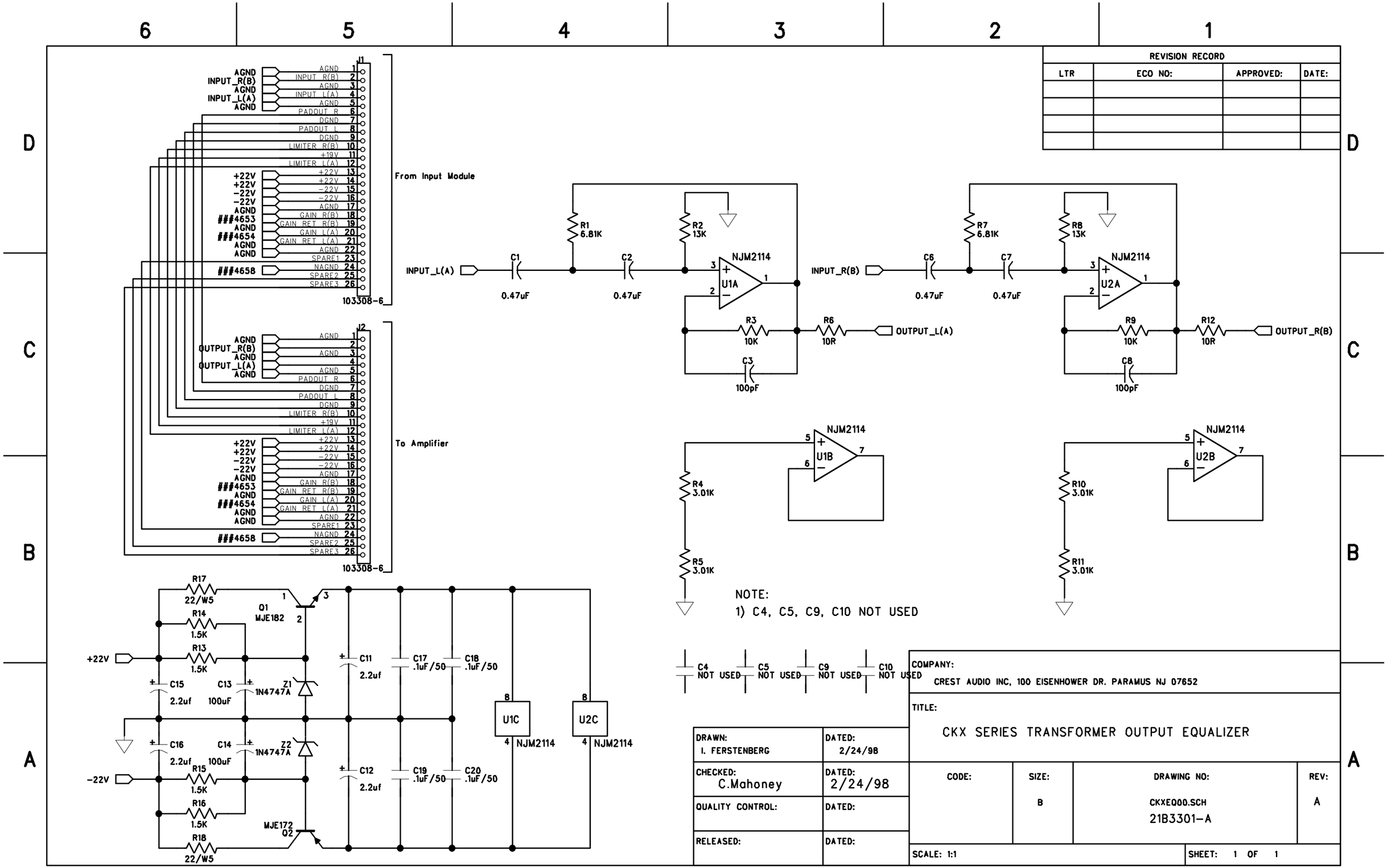
J1
AGND 1
INPUT_R(B) 2
AGND 3
INPUT_L(A) 4
AGND 5
PADOUT_R 6
DGND 7
PADOUT_L 8
DGND 9
LIMITER_R(B) 10
+19V 11
LIMITER_L(A) 12
+22V 13
+22V 14
-22V 15
-22V 16
AGND 17
GAIN_R(B) 18
GAIN_RET_R(B) 19
GAIN_L(A) 20
GAIN_RET_L(A) 21
AGND 22
SPARE1 23
NAGND 24
SPARE2 25
SPARE3 26
103308-6
From Input Module
J2
To Amplifier
INPUT_L(A)
INPUT_R(B)
OUTPUT_L(A)
OUTPUT_R(B)
R1 6.81K
R2 13K
R3 10K
R6 10R
C1 0.47uF
C2 0.47uF
C3 100pF
NJM2114
U1A
R7 6.81K
R8 13K
R9 10K
R12 10R
C6 0.47uF
C7 0.47uF
C8 100pF
U2A
U1B
U2B
R4 3.01K
R5 3.01K
R10 3.01K
R11 3.01K
NOTE:
1) C4, C5, C9, C10 NOT USED
C4 NOT USED
C5 NOT USED
C9 NOT USED
C10 NOT USED
R17 22/W5
R14 1.5K
R13 1.5K
R15 1.5K
R16 1.5K
R18 22/W5
Q1 MJE182
MJE172 Q2
+22V
-22V
C15 2.2uf
C16 2.2uf
C13 100uF
C14 100uF
Z1 1N4747A
Z2 1N4747A
C11 2.2uf
C12 2.2uf
C17 .1uF/50
C18 .1uF/50
C19 .1uF/50
C20 .1uF/50
U1C
U2C
NJM2114
REVISION RECORD
LTR
ECO NO:
APPROVED:
DATE:
COMPANY:
CREST AUDIO INC, 100 EISENHOWER DR. PARAMUS NJ 07652
TITLE:
CKX SERIES TRANSFORMER OUTPUT EQUALIZER
DRAWN: I. FERSTENBERG
DATED: 2/24/98
CHECKED: C.Mahoney
DATED: 2/24/98
QUALITY CONTROL:
DATED:
RELEASED:
DATED:
CODE:
SIZE: B
DRAWING NO: CKXEQ00.SCH 21B3301-A
REV: A
SCALE: 1:1
SHEET: 1 OF 1

ITEM	QUAN	DESCRIPTION	MANUFACTURER	MFG PART No.	CREST PART No.
1	1	CONN. 4 PIN CAP HOUSING	MOLEX	50-84-2041	24000295
2	2	MALE PIN 14-20 GA.	MOLEX	02-08-2005	24000521
3	2	FEMALE PIN 14-20 GA.	MOLEX	02-08-1003	24000219
4	1	CKX OUTPUT TRANSFORMER			93-xxx
5	1	CRIMP CAP	AMP	36965	25000001

REV.	ECO	DESCRIPTION	APP.	DATE
01		LENGTH WAS 7"	RJ	20 FEB 98

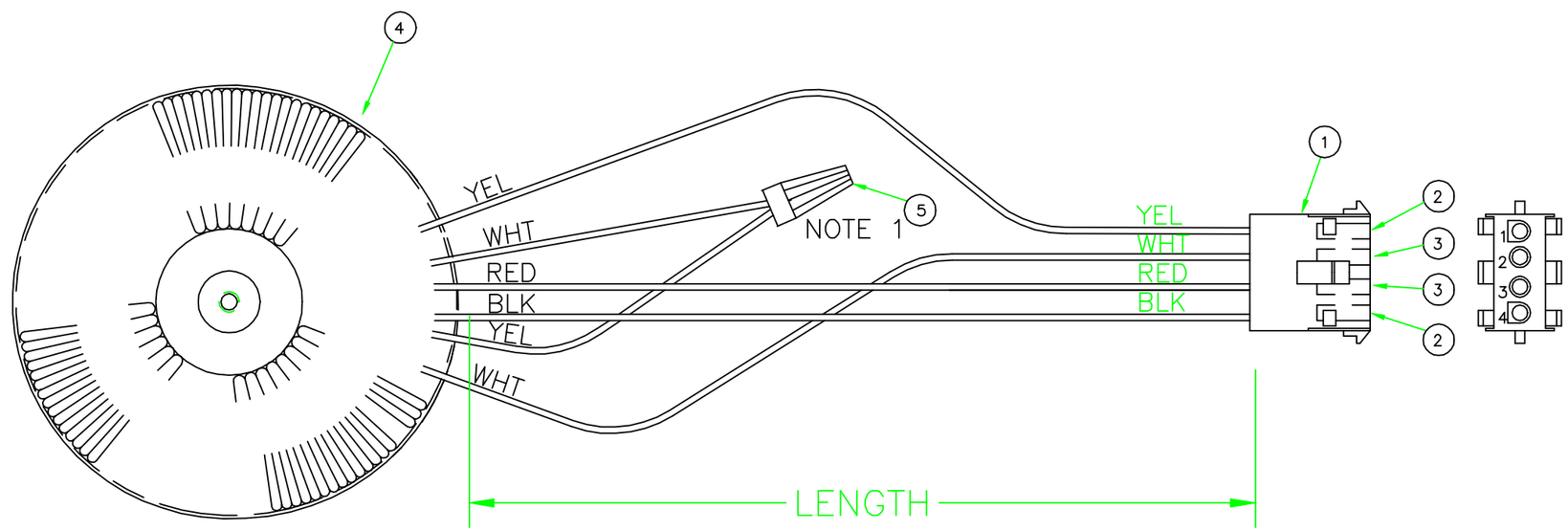

NOTES:
1. CONNECT SECONDARY 1 FINISH TO SECONDARY 2 START.

WIRE	DESCRIPTION	COLOR	LENGTH	STRIP LENGTH	TO
1	SECONDARY 1 START	WHT	7 1/2"		J1-1
2	SECONDARY 1 FINISH	YEL			NOTE 1
3	PRIMARY START	BLK	7 1/2"		J1-2
4	PRIMARY FINISH	RED	7 1/2"		J1-3
5	SECONDARY 2 START	WHT			NOTE 1
6	SECONDARY 2 FINISH	YEL	7 1/2"		J1-4

CREST AUDIO
PARAMUS, NJ 07652

ORIG'LY DWN.: R.J.
DATE: 30JUL97
SCALE: NTS
DO NOT SCALE DRAWING
TOL.:
.XX: +/-.02
.XXX:+/-.01
FRACT:+/-1/64 <:+/-1°
MAT'L: AS NOTED
FINISH: -

TITLE/APPLICATION
CKX150 OUTPUT TRANSFORMER PLUG WIRING

DWG.# 22B3478
REV.: 01
CREST P/N

CURRENT REVISION DRAWN BY:
DATE:
APPROVED BY:
DATE:

REVISION RECORD			
LTR	ECO NO:	APPROVED:	DATE:

GAIN RESISTORS CHANGES PER MODEL

1. MODELS CKV1600, CKV2400 AND CKS1800 RESISTOR VALUE IS 392 OHM.
2. MODEL CKS1200 RESISTOR VALUE IS 402 OHM.

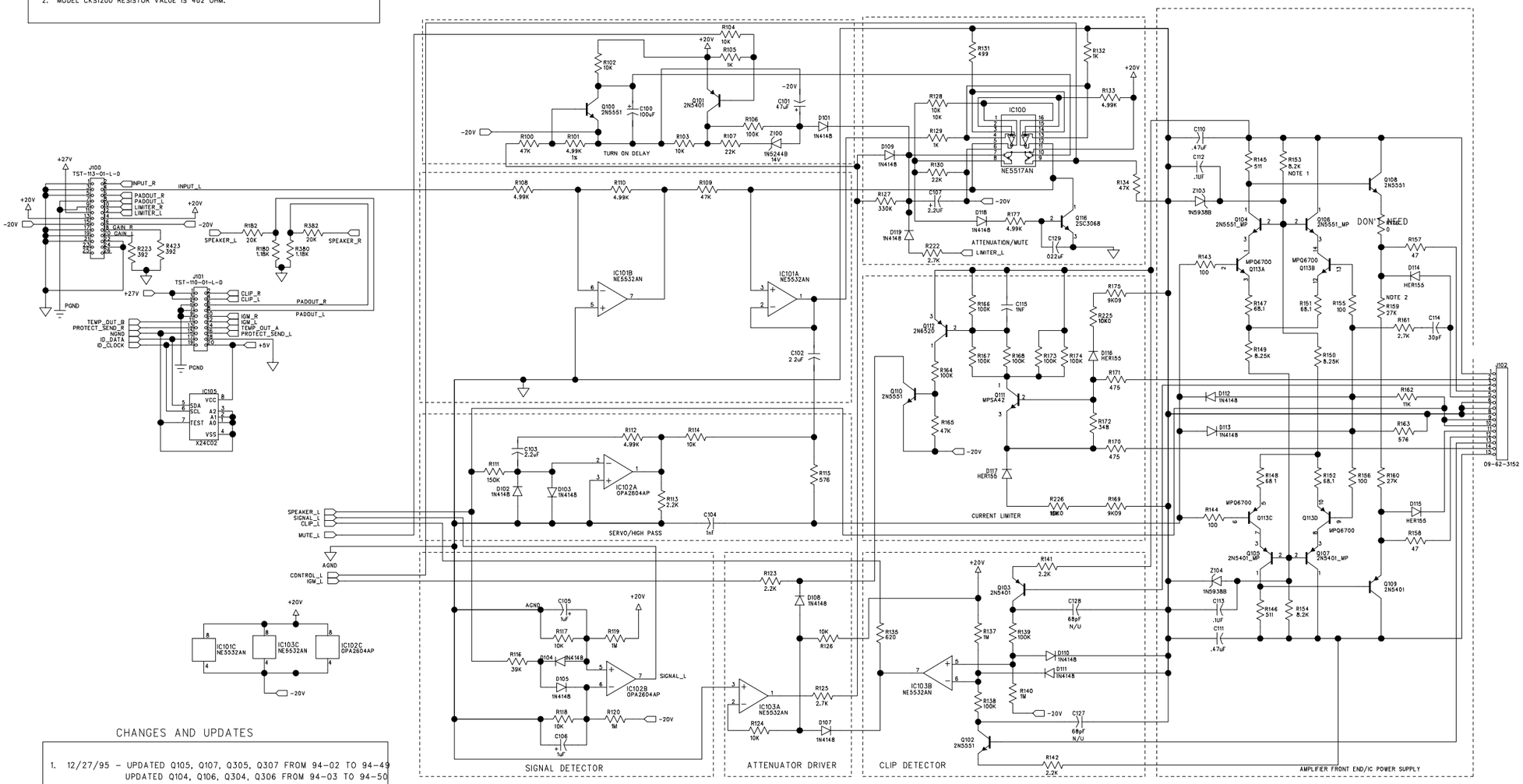

CHANGES AND UPDATES

1. 12/27/95 - UPDATED Q105, Q107, Q305, Q307 FROM 94-02 TO 94-49
   UPDATED Q104, Q106, Q304, Q306 FROM 94-03 TO 94-50
   ADDED TO-92 HEATSINKS TO HOUSE B.O.M.
   DELETED C127, C128, C327, OFF HOUSE B.O.M.
2. 2/5/95- ON CKS1200 R223 AND R423 ARE 402R 1%
3. CHANGES FOR OBSOLETE PARTS:
   A) Q113, 114 AND Q313, 314
   B) REPACE LM614 WITH LM324
4. REPLACE Q112, 312 TO PREVENT VCEO FAILURES

NOTE: CHANGE BOARD & SCHEMATIC # BEFORE RELEASING

CRESTAUDIO

TITLE: HI-POWER CKV/CKS PREAMP (FRONTEND SECTION) (CHANNEL A)

DRAWN: C.MAHONEY	DATED: 7/12/99	CODE:	SIZE:	DRAWING NO: 21D2508	REV 04
CHECKED:	DATED:				
QUALITY CONTROL:	DATED:				
RELEASED:	DATED:	SCALE:		SHEET: 1 OF 5	

REVISION RECORD			
LTR	ECO NO.	APPROVED:	DATE:

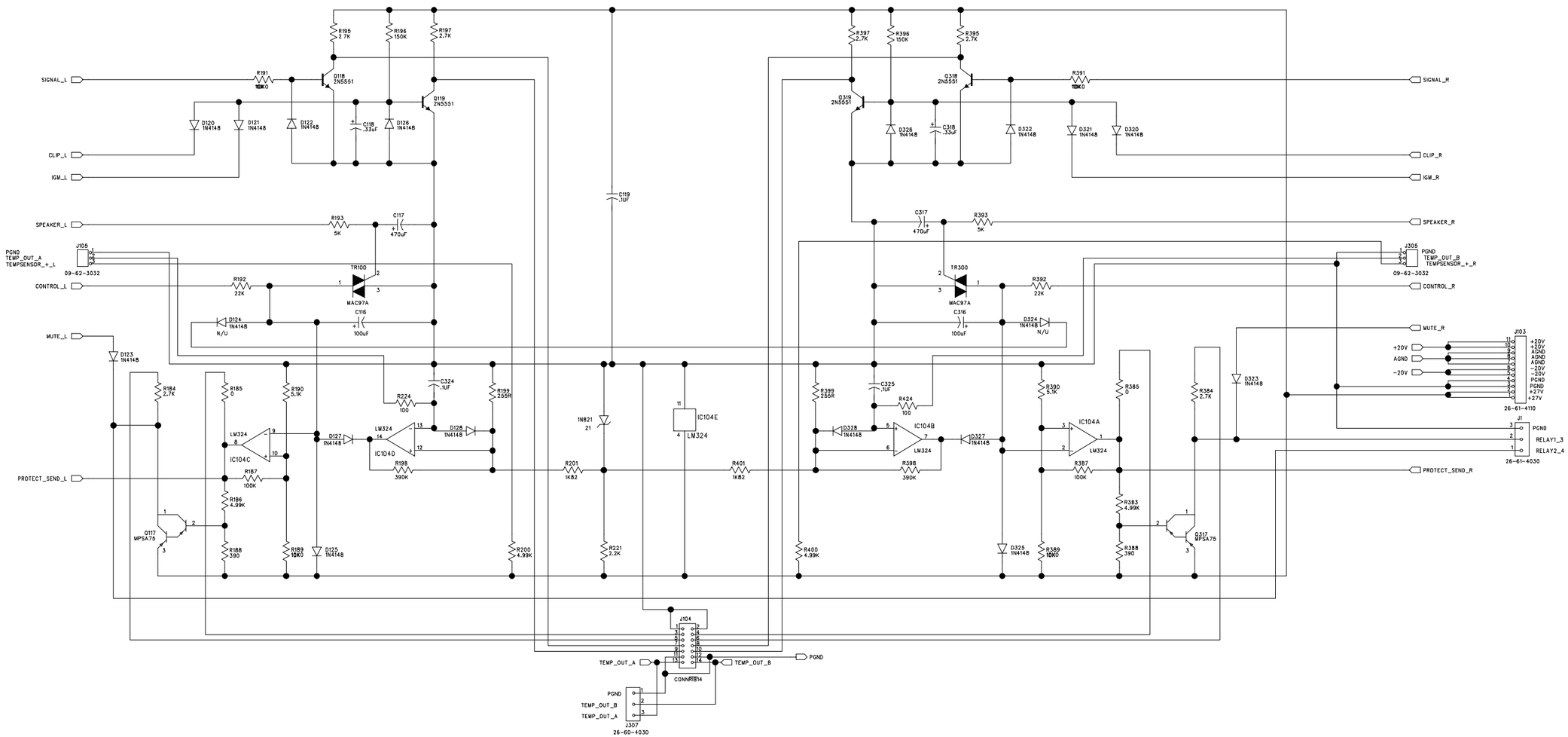

CRESTAUDIO

TITLE:
HI-POWER CKS/CKV PREAMP (DISPLAY SECTION)
(CHANNEL A & B)

DRAWN: LAP	DATED: 8/95	CODE:	SIZE: D	DRAWING NO: 21D2508	REV 04
CHECKED:	DATED:				
QUALITY CONTROL:	DATED:				
RELEASED:	DATED:	SCALE:		SHEET: 2 OF 5	

REVISION RECORD			
LTR	ECO NO:	APPROVED:	DATE:

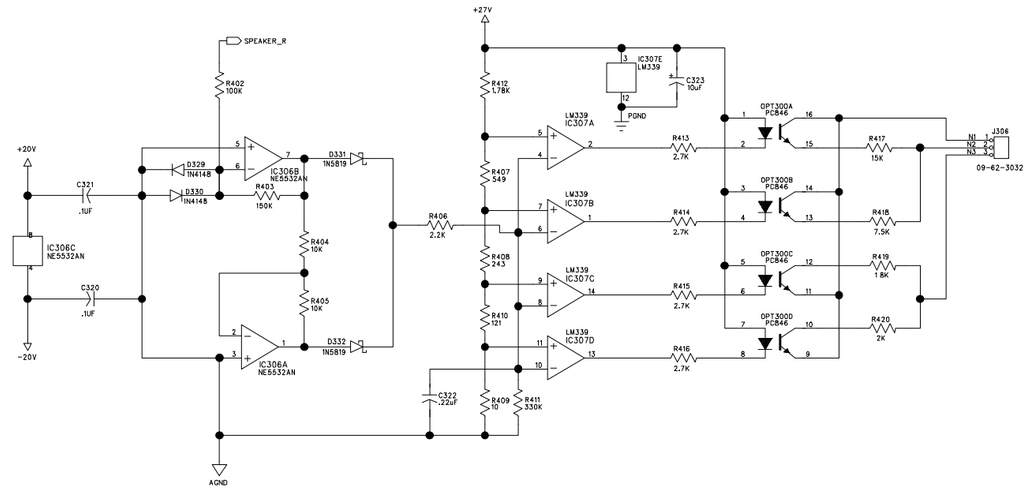

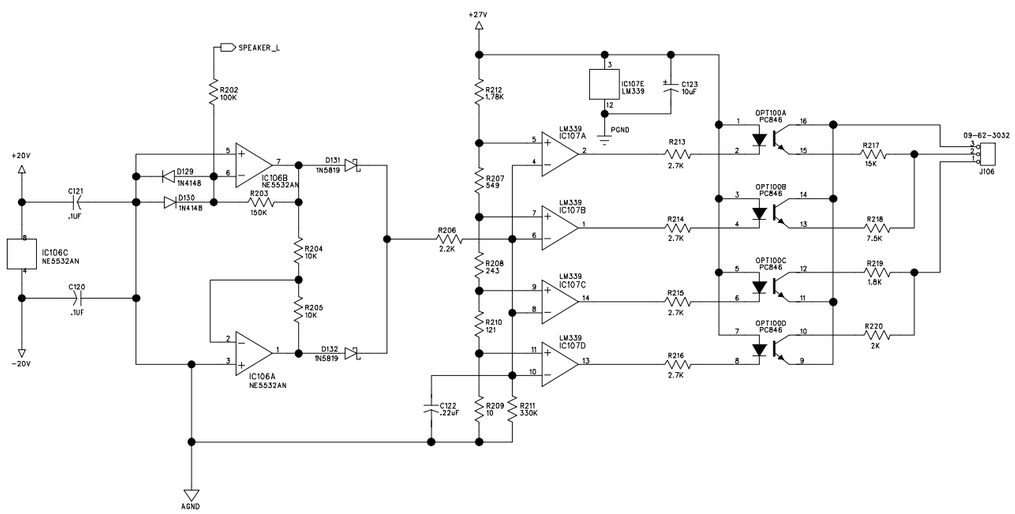

CRESTAUDIO

TITLE: HI-POWER CKS/CKV PREAMP (SLIDE "I" SECTION) (CHANNEL A & B)

DRAWN: LAP	DATED: 8/95	CODE:	SIZE: D	DRAWING NO: 21D2508	REV 04
CHECKED:	DATED:				
QUALITY CONTROL:	DATED:				
RELEASED:	DATED:	SCALE:		SHEET: 3 OF 5	

REVISION RECORD			
LTR	ECO NO:	APPROVED:	DATE:

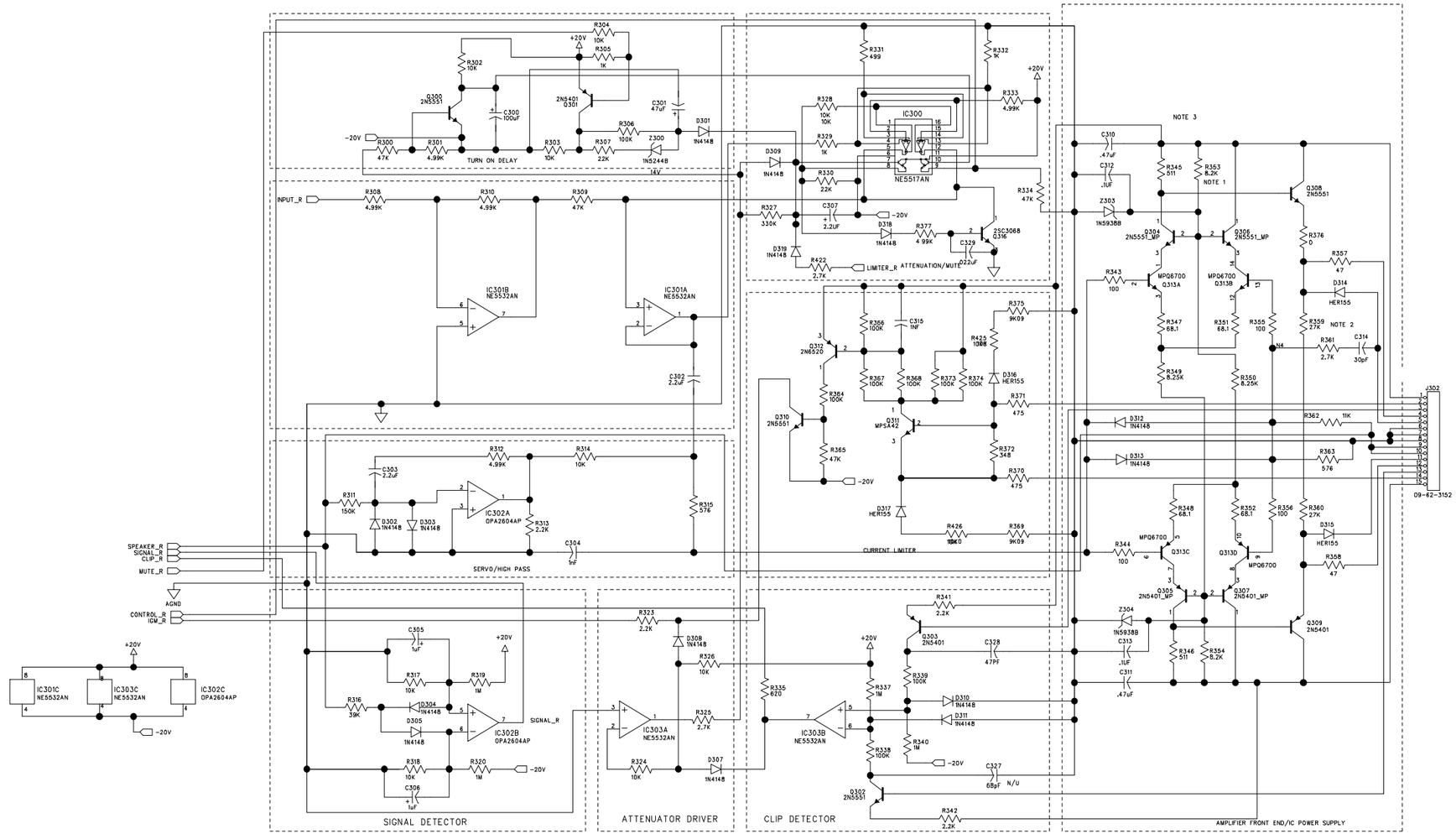

DRAWN: LAP	DATED. 8/95	CRESTAUDIO	
CHECKED:	DATED:	TITLE: HI-POWER CKS/CKV PREAMP (FRONTEND SECTION) (CHANNEL B)	
QUALITY CONTROL:	DATED:	CODE: / SIZE:D / DRAWING NO: 21D2508	REV 04
RELEASED:	DATED:	SCALE:	SHEET: 4 OF 5

REVISION RECORD			
LTR	ECO NO:	APPROVED:	DATE:

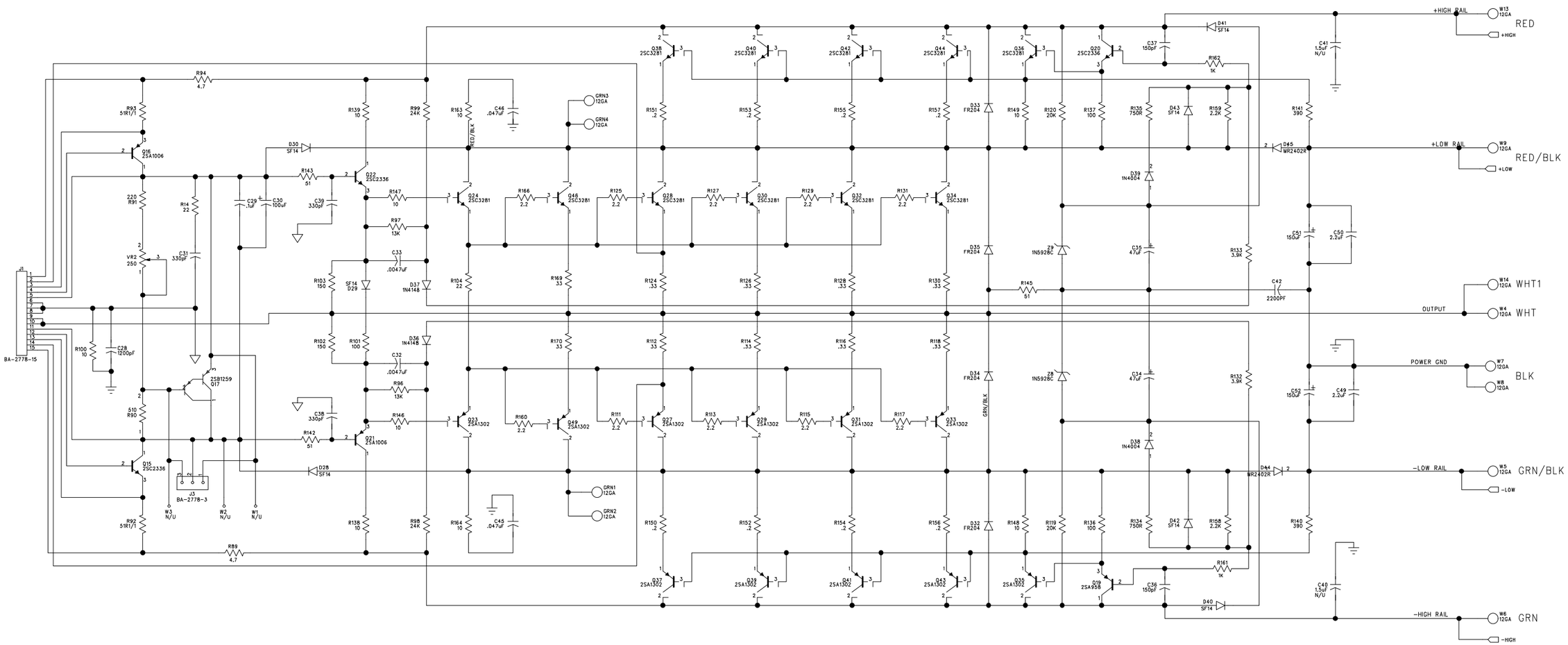

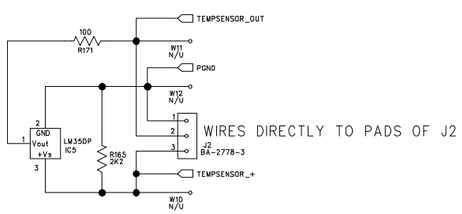

CRESTAUDIO

TITLE.
HI PWR CKS/CKV OUTPUT MODULE
4 SPACE AMPLIFIER

DRAWN:	DATED: 8/15/94	CODE.	SIZE:	DRAWING NO:	REV:
CHECKED:	DATED:		D	2513-03	3
QUALITY CONTROL:	DATED:				
RELEASED:	DATED:	SCALE:		SHEET: 1 OF 2	

REVISION RECORD			
LTR	ECO NO:	APPROVED:	DATE:

PCB1
PCB_CKS_DSP

INSERTION TOOLS

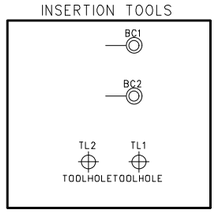

SWAGES FOR DISPLAY

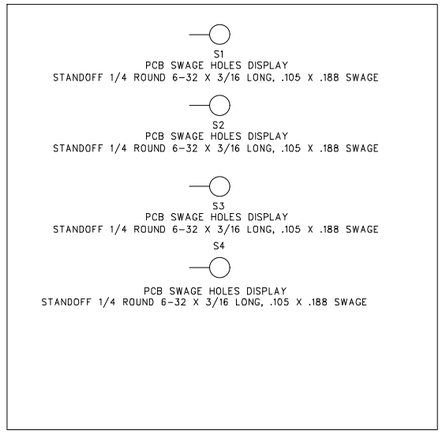

LED7, 8 AND 9 FOR 3 SPACE DISPLAY

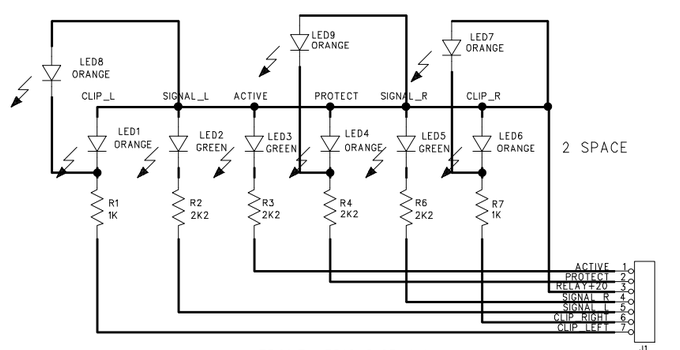

FRONT LED'S DISPLAY

CRESTAUDIO

TITLE: CKS/CKX/CKV DISPLAY PC BOARD			
CODE:	SIZE: C	DRAWING NO: 21C3946-A	REV: 00
SCALE:		SHEET: 1 OF 1	

DRAWN:	DATED:
CHECKED:	DATED:
QUALITY CONTROL:	DATED:
RELEASED:	DATED:

REVISION RECORD			
LTR	ECO NO:	APPROVED:	DATE:

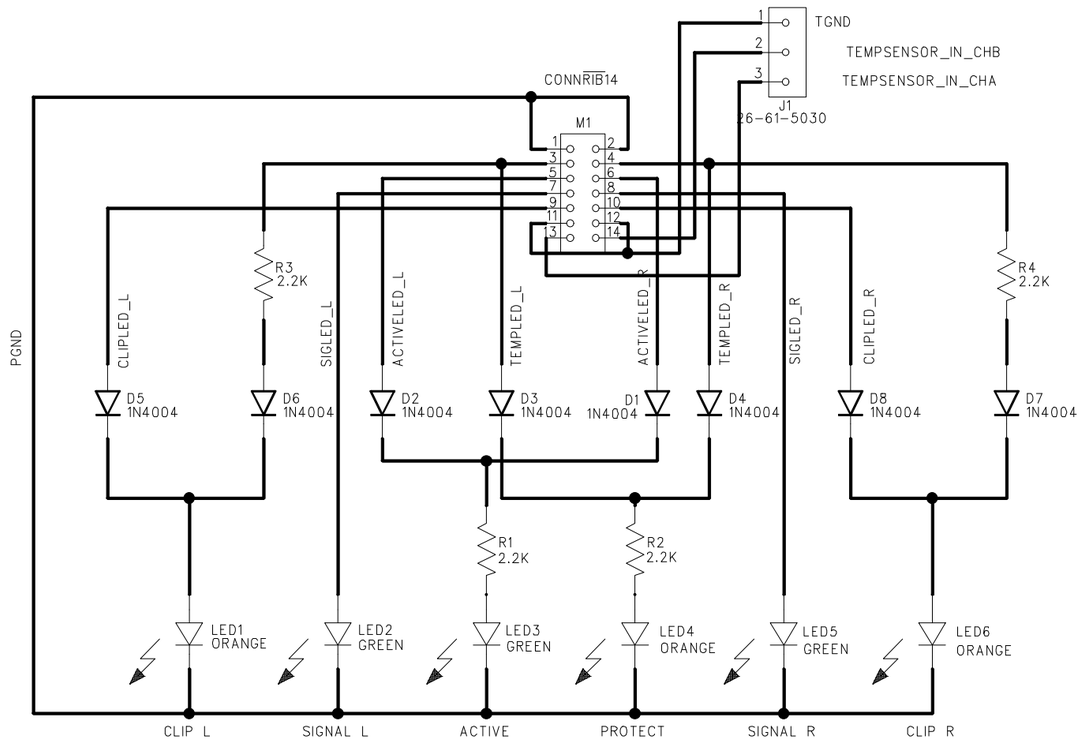

FRONT PANEL LED'S

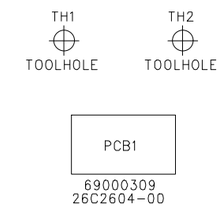

DRAWN:	DATED:
CHECKED:	DATED:
QUALITY CONTROL:	DATED:
RELEASED:	DATED:

COMPANY: CREST AUDIO

TITLE: HI-POWER CKS/CKV DISPLAY
4 SPACE AMP

CODE:	SIZE:	DRAWING NO:	REV:
		2604-00	0

SCALE:

SHEET: 1 OF 1

REVISION RECORD			
LTR	ECO NO:	APPROVED:	DATE:

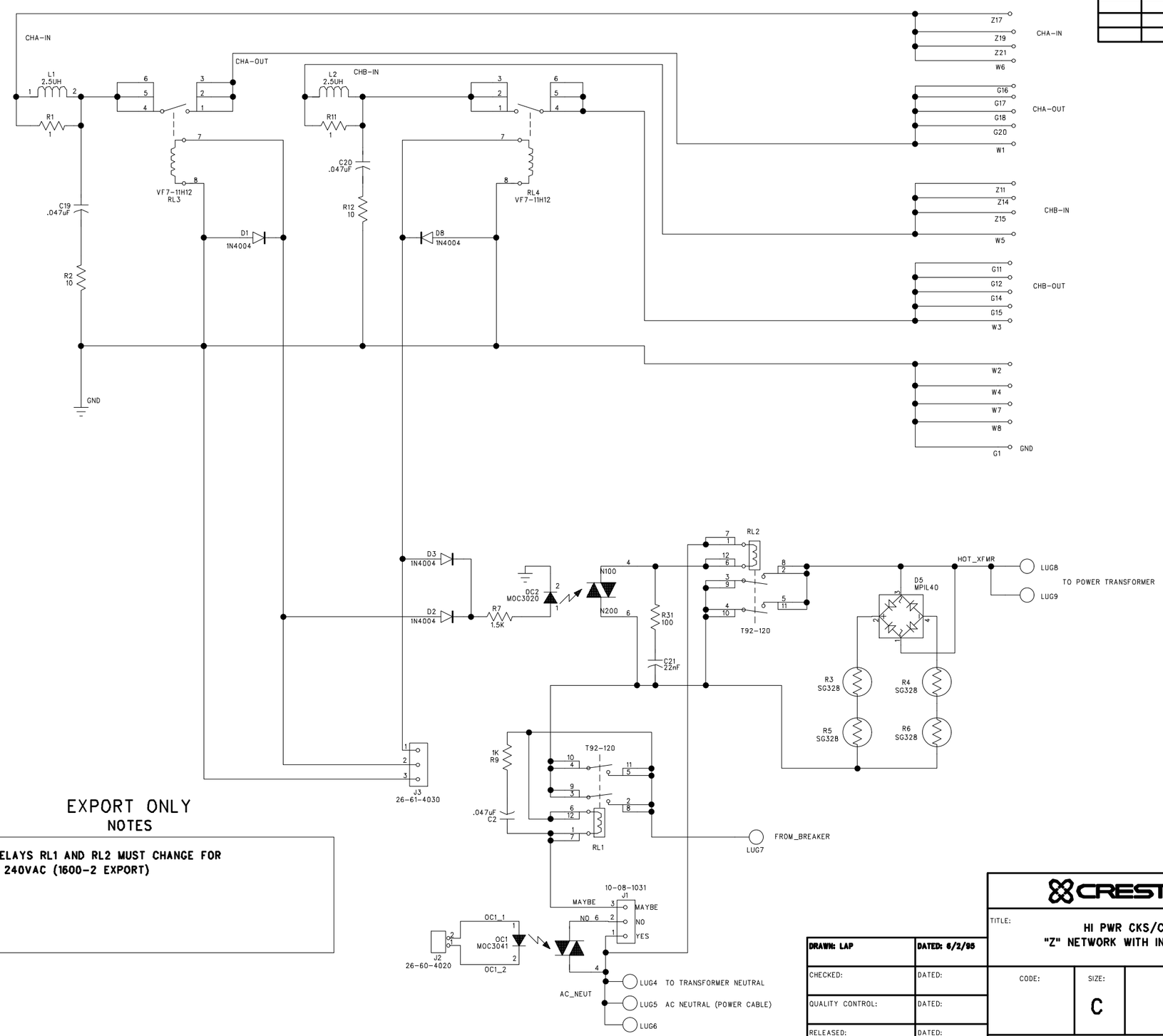

EXPORT ONLY

NOTES

1. RELAYS RL1 AND RL2 MUST CHANGE FOR 240VAC (1600-2 EXPORT)

DRAWN: LAP	DATED: 6/2/95
CHECKED:	DATED:
QUALITY CONTROL:	DATED:
RELEASED:	DATED:

CREST AUDIO

TITLE: HI PWR CKS/CKV 4 SPACE AMP "Z" NETWORK WITH INRUSH PROTECTION

CODE:	SIZE:	DRAWING NO:	REV:
	C	2529-04	4

SCALE: SHEET: 1 OF 2

REVISION RECORD			
LTR	ECO NO:	APPROVED:	DATE:

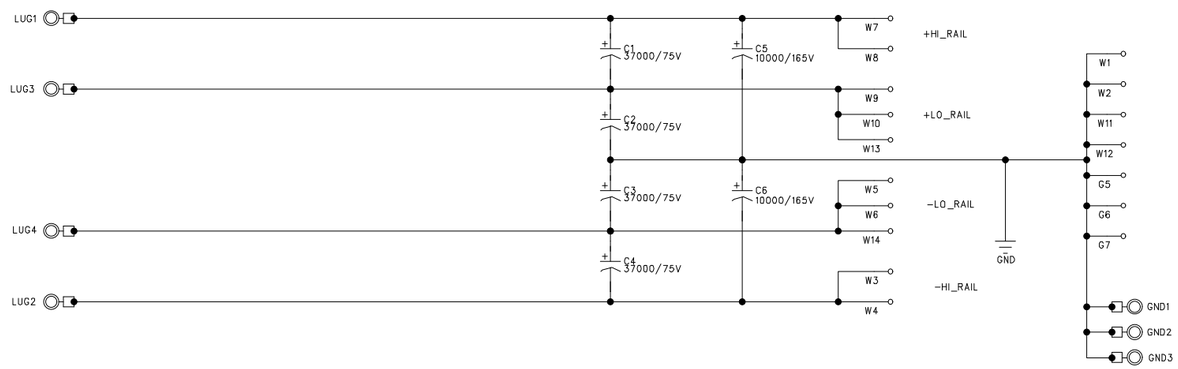

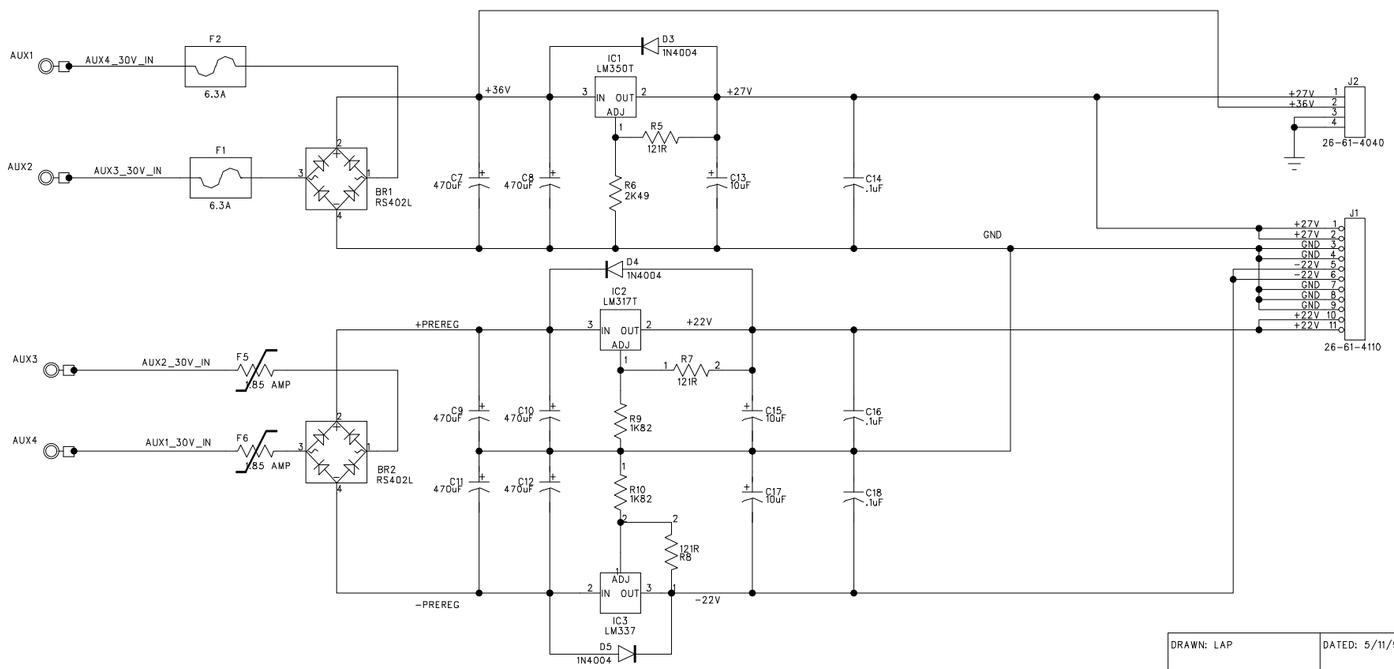

DRAWN: LAP	DATED: 5/11/95
CHECKED:	DATED:
QUALITY CONTROL:	DATED:
RELEASED:	DATED:

CREST AUDIO

TITLE:

HI-POWR CKS/CKV POWER SUPPLY

CODE:	SIZE:	DRAWING NO	REV
	C	21C2530	02
SCALE:		SHEET: 1OF 2	

REVISION RECORD			
LTR	ECO NO:	APPROVED:	DATE:

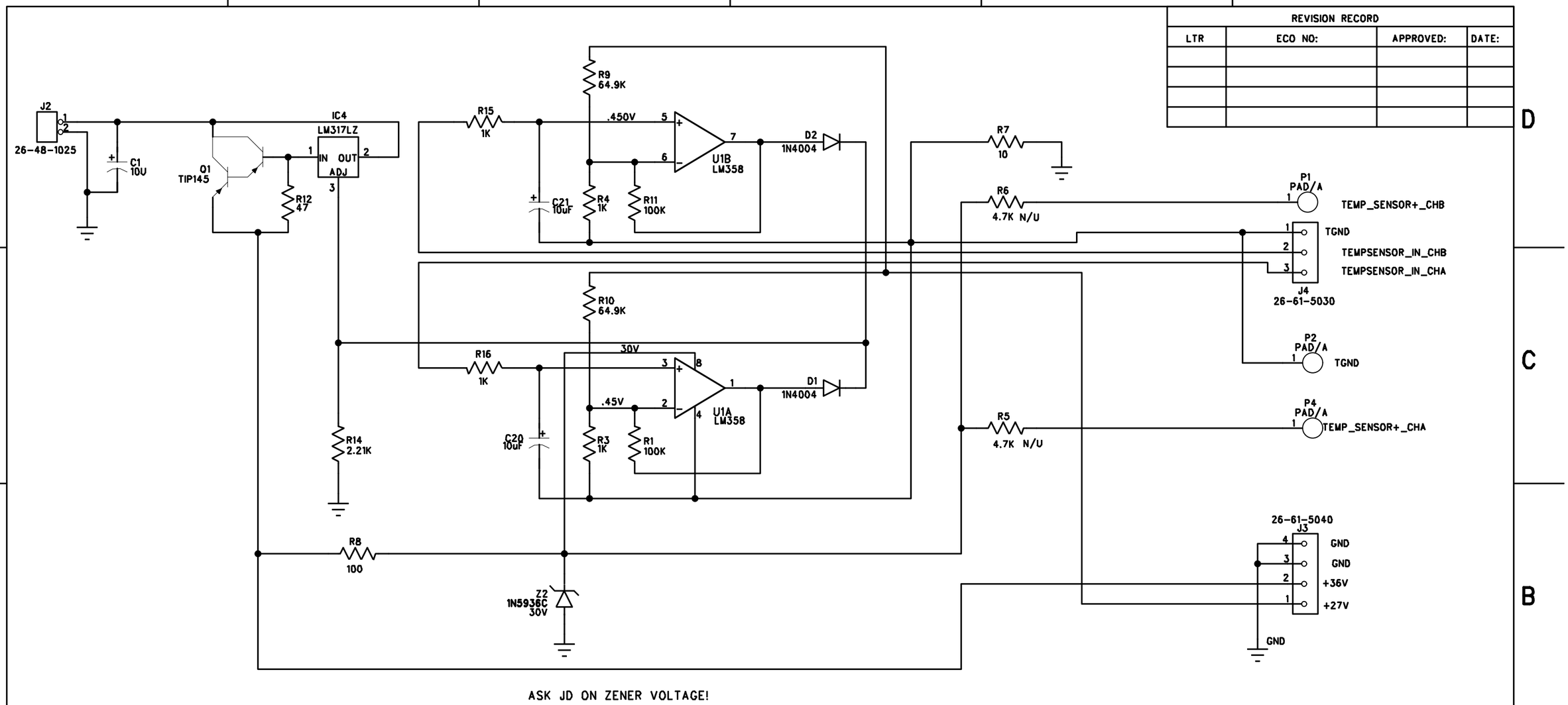

ASK JD ON ZENER VOLTAGE!

PCB1
PCB
26B2600-01
69000310

DRAWN: LAP	DATED: 8/95	COMPANY: CREST AUDIO		
CHECKED:	DATED:	TITLE: HI PWR CKS/CKV FAN PCB 4 SPACE AMP		
QUALITY CONTROL:	DATED:	CODE:	SIZE: B	DRAWING NO: 2600-01 / REV: 1
RELEASED:	DATED:	SCALE:		SHEET: 1 OF 1