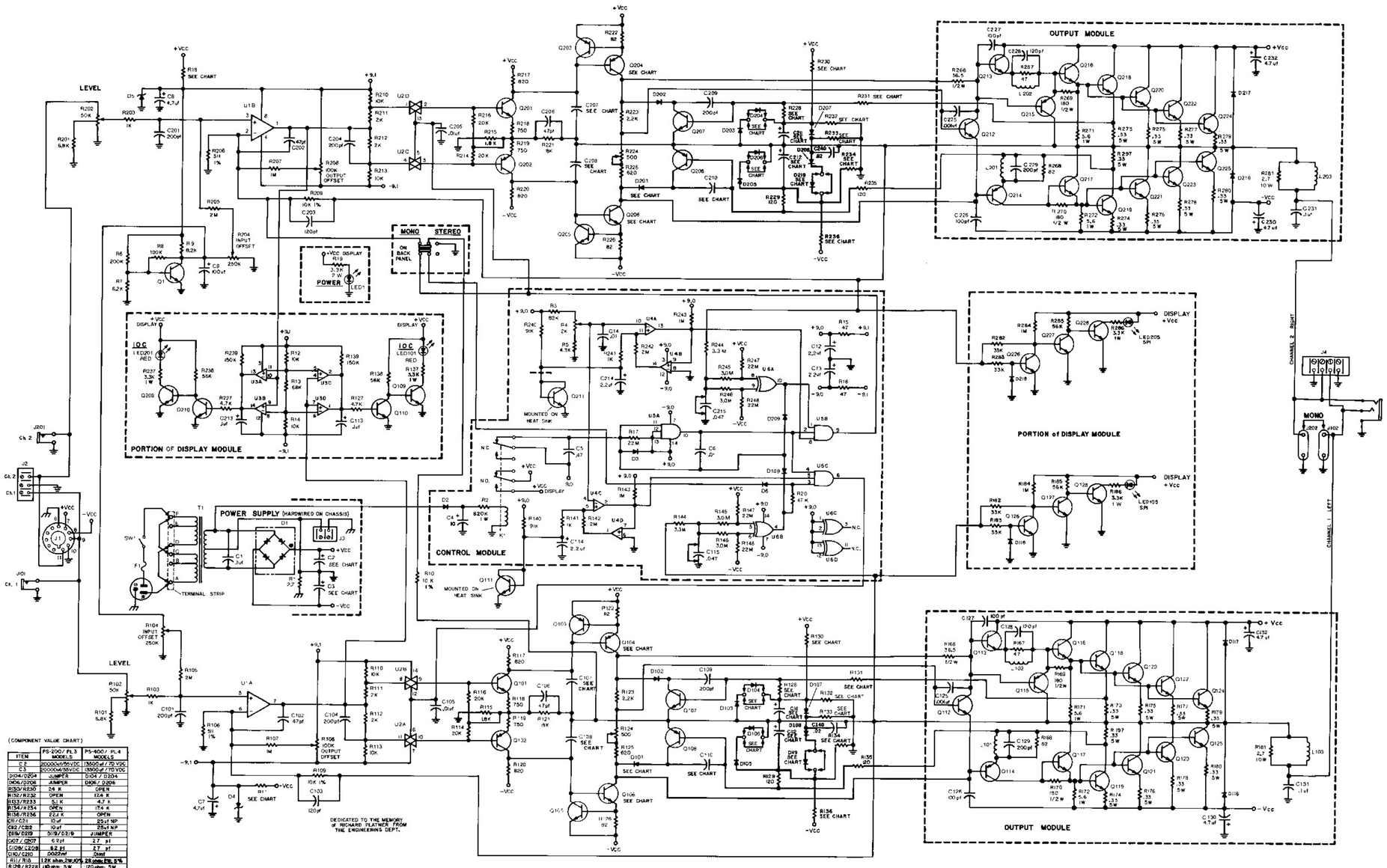

(COMPONENT VALUE CHART)

ITEM	PS-200/PL3 MODELS	PS-400/PL4 MODELS
C2	20000uf/55VDC	13500uf/70VDC
C3	20000uf/55VDC	13500uf/70VDC
D104/D204	JUMPER	D104/D204
D106/D206	JUMPER	D106/D206
R130/R230	24 K	OPEN
R132/R232	OPEN	12.4 K
R133/R233	5.1 K	4.7 K
R134/R234	OPEN	17.4 K
R136/R236	22.1 K	OPEN
C81/C81	10 uf	25 uf NP
C82/C82	10 uf	25 uf NP
D119/D219	D119/D219	JUMPER
C107/C207	6.2 pf	2.7 pf
C108/C208	6.2 pf	2.7 pf
C110/C210	.0022 mf	Omit
R11/R16	12K ohm, 2W 10%	2K ohm, 2W, 5%
R128/R228	110 ohm, 5W	120 ohm, 5W
R131/R231	130 ohm, 5W	120 ohm, 5W
D101/D201	D2961	1N270
D104/D204	A93	2923
D106/D206	A45	D40P3

PS-400 SCHEMATIC NOTES

- CIRCUIT SHOWN APPLIES TO UNITS WITH SN31024 AND ABOVE.
- ALL RESISTORS ARE IN OHMS, ALL CAPACITORS IN MICROFARADS UNLESS OTHERWISE DESIGNATED.
- ALL RESISTORS ARE .25 WATT, 5% TOLERANCE UNLESS OTHERWISE DESIGNATED.
- COMPONENTS COMMON TO BOTH CHANNELS ARE NUMBERED FROM 1 TO 99.
- CHANNEL ONE COMPONENTS ARE NUMBERED FROM 100 TO 199.
- CHANNEL TWO COMPONENTS ARE NUMBERED FROM 200 TO 299.
- MONO/STEREO SWITCH SHOWN IN THE MONO POSITION.
- +VCC IS 62 VOLTS.

Fig. 6.1 PS-400 Schematic