MODEL TR-145W

MODEL TRF-145E

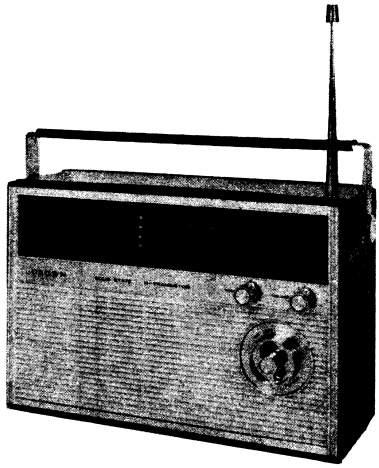

SPECIFICATIONS

TR-145W

TYPE: 11 Transistor, 4 Band, Superheterodyne Receiver (AC power supply self-contained, Sleep Switch equipped)

Frequency Range .... MW: 525-1605KHz
SW1: 1.6-4MHz
SW2: 4-10MHz
SW3: 10-22MHz

IF 455KHz

Output Power ..... Useable: 900±100mW (battery used)
Maximum: 1400±150mW (battery used)

Power Source ..... DC 6V, "D" battery x 4
AC117/220V

Maximum Sensitivity . (battery used, output= 50mW) MW: 35±6dB at 1000KHz
SW1: 31±6dB at 3MHz
SW2: 30±6dB at 7MHz
SW3: 17±6dB at 16MHz

Useable Sensitivity .. (battery used, output =50mW, S/N=10dB) MW: 40±4dB at 1000KHz
SW1: 36±4dB at 3MHz
SW2: 31±4dB at 7MHz
SW3: 19±4dB at 16MHz

S/N Ratio : (input .. =60dB for MW, SW1 & SW3 input=44dB for SW3) MW: 30±4dB at 1000KHz
SW1: 34±4dB at 3MHz
SW2: 37±4dB at 7MHz
SW3: 35±4dB at 16MHz

Current Drain ..... No signal: 26±5mA
Useable output: 260±15mA
Maximum output: 350±20mA

Under Voltage ..... Non-working voltage:
DC-less than 3V
AC-less than 60% of rated voltage

Demensions ..... 10-11/16 x 7-5/16 x 3-9/16 inch

Weight ..... 5.7 lbs (with batteries)

TRF-145E

TYPE: 11 Transistor, 4 Band, Superheterodune Receiver

Frequency Range ... FM: 87-108MHz
LW: 150-400KHz
MW: 525-1605KHz
49m: 5.9-6.3MHz

IF..... FM: 10.7MHz
AM: 470KHz

Output Power ..... Useable: 900±100mW
Maximum: 1400±150mW

Power Source ..... DC 6V, "D" battery x 4

Maximum Sensitivity (output=50mW) FM: 5±8dB at 98 MHz
LW: 44±8dB at 280KHz
MW: 34±8dB at 1000KHz
49m: 29±8dB at 6.1MHz

Useable Sensitivity . (output=50mW, S/N =30dB for FM, S/N =10dB for others) FM: 12±6dB at 98MHz
LW: 44±8dB at 280KHz
MW: 38±6dB at 1000KHz
49m: 32±6dB at 6.1MHz

S/N Ratio ..... (input=6dB for MW & 49m, 66dB for LW, 28dB for FM) FM: 55±8dB at 98MHz
LW: 33±6dB at 280KHz
MW: 32±6dB at 1000KHz
49m: 35±6dB at 6.1MHz

Current Drain..... No signal: 26±5mA
Useable output: 260±15mA
Maximum output: 350±20mA

Under Voltage ..... Non-working voltage:
AM-less than 2.8V
FM-less than 3.8V

Demensions..... 10-11/16 x 7-5/16 x 3-9/16 inch

Weight ..... 5.3 lbs (with batteries)

TRF-145E SCHEMATIC DIAGRAM

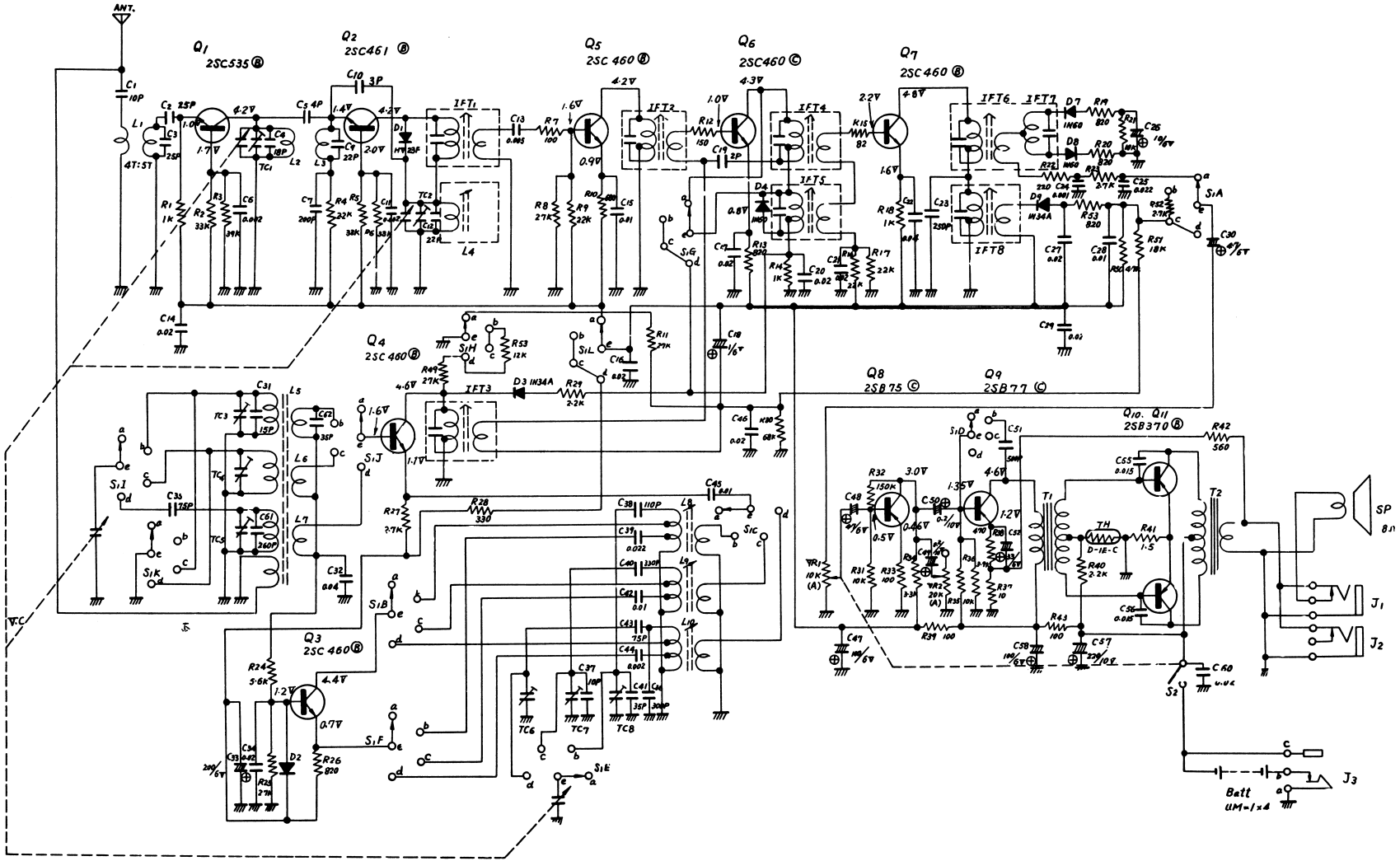

TR-145W SCHEMATIC DIAGRAM

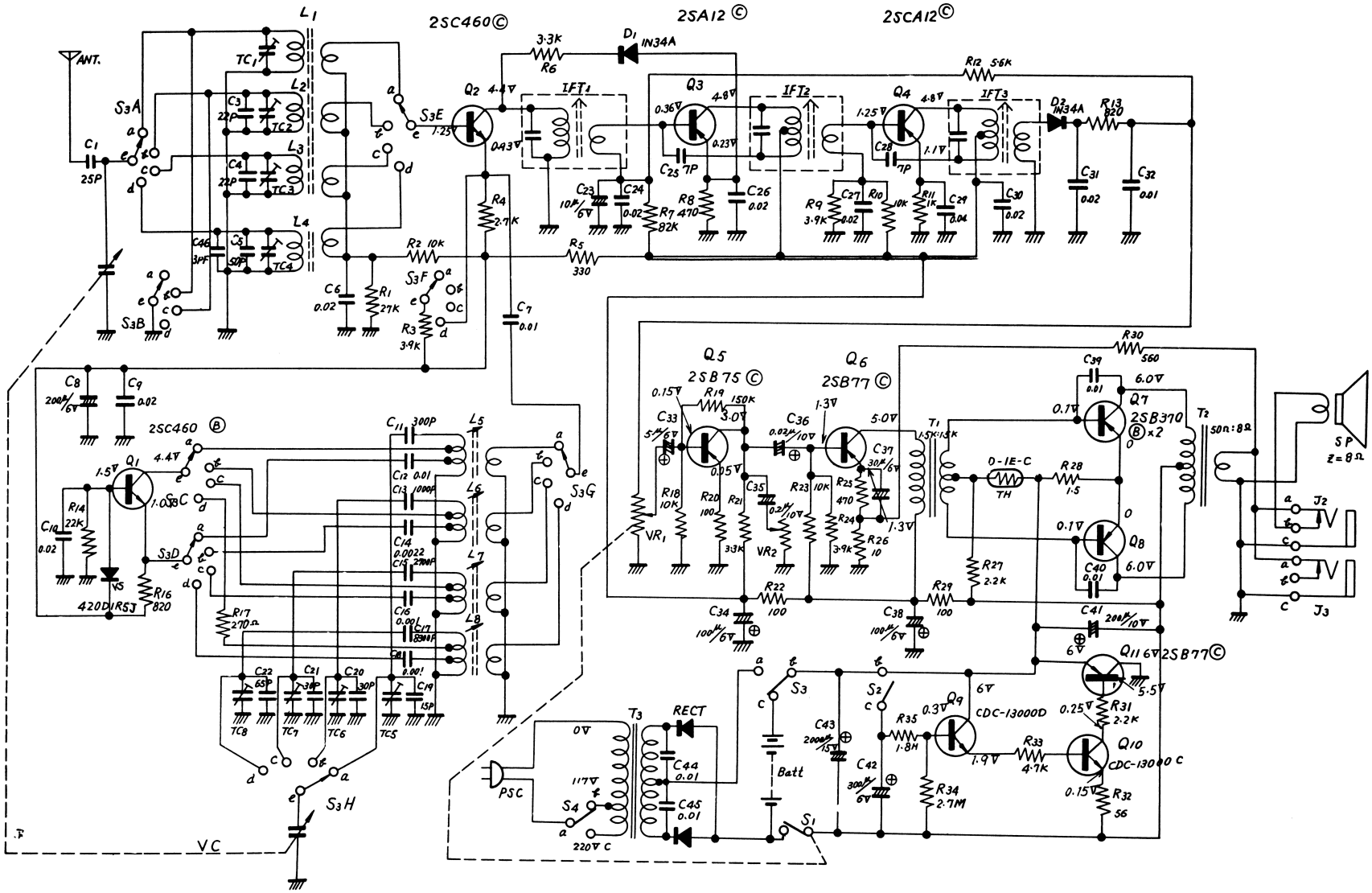

Crown TR-145W

TR-145W LEAD CONNECTIONS

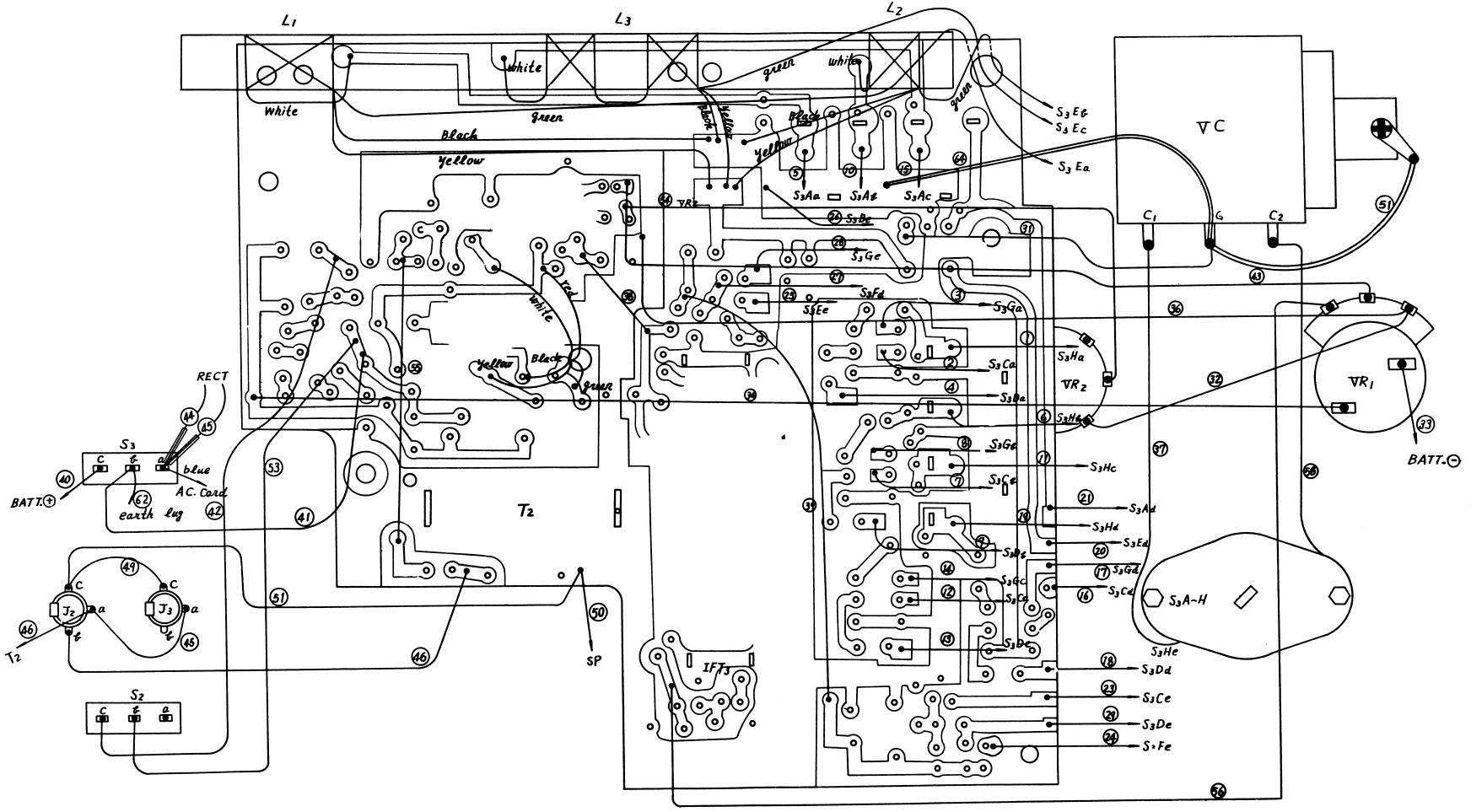

Crown TR-145E

TRF-145E LEAD CONNECTIONS

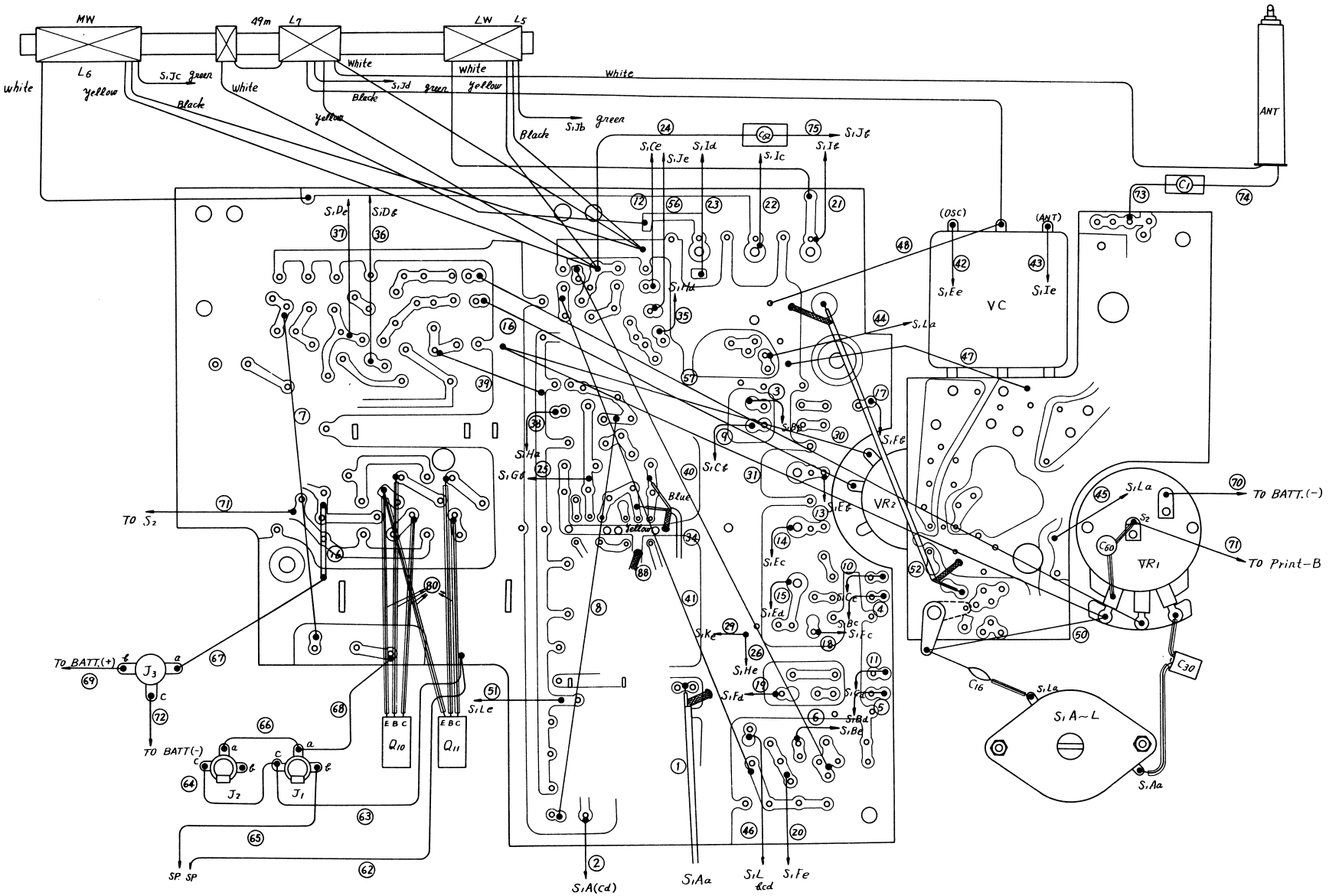

TRF-145E PRINTED BOARD
(Component)

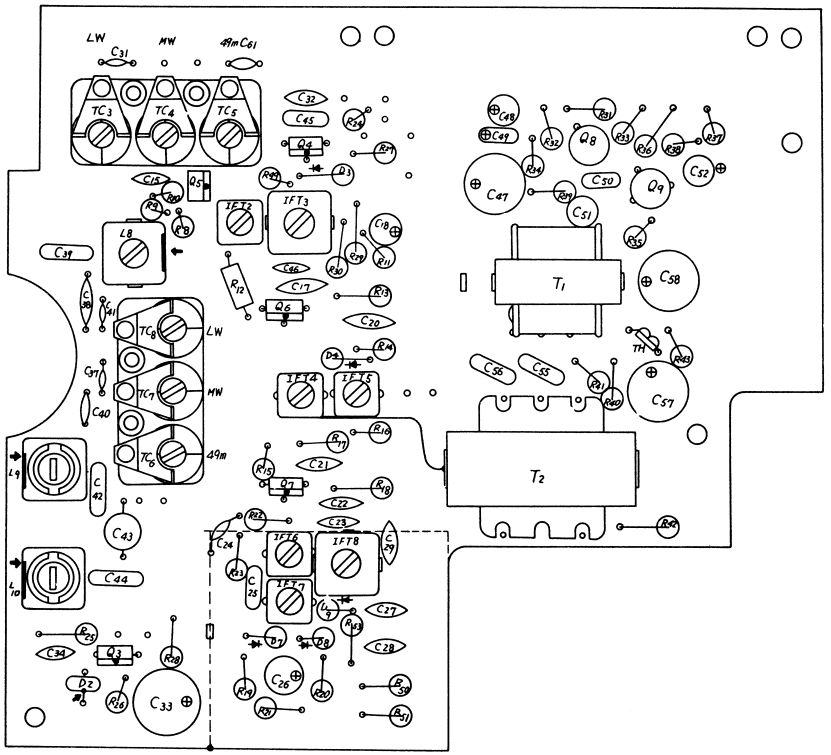

TRF-145E PRINTED BOARD
(Component)

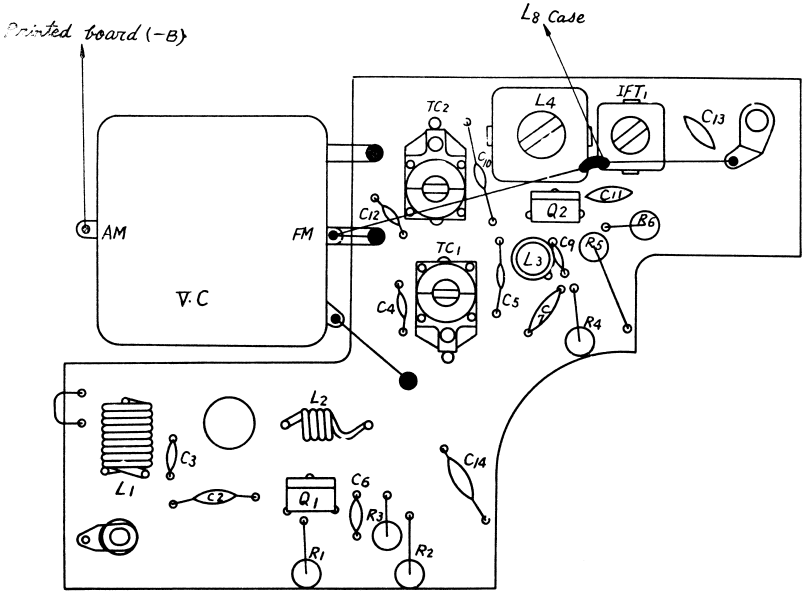

Fig. 9
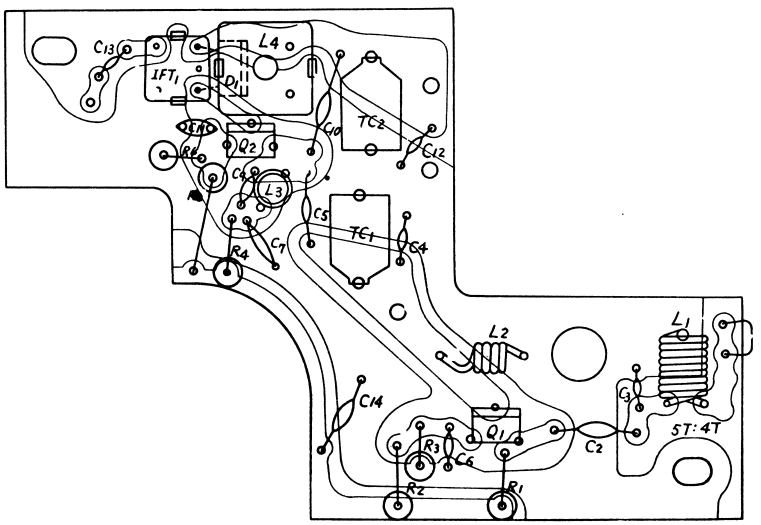
(Wiring Side)