DB Systems DB-1 Preamplifier & DB-4 Moving Coil Cartridge Pre-Preamplifier

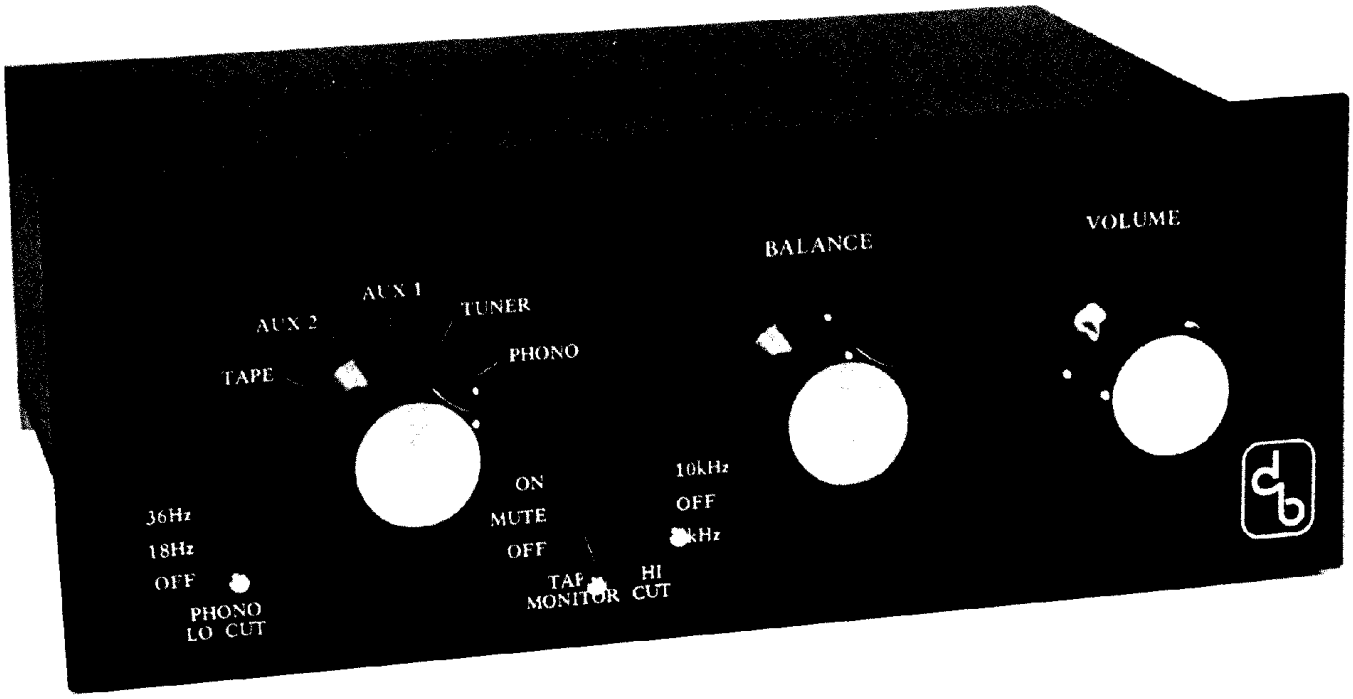

MANUFACTURER'S SPECIFICATIONS

DB-1 Preamplifier

THD: Less than 0.0008 per cent, 20 Hz to 20 kHz, excluding hum and noise.

Noise: Phono, −89 dB, A weighted with 10 mV input; high level, −90 dB, A weighted with 1 volt input.

Frequency Response: Phono, ±0.25 dB 5 Hz to 20 kHz RIAA extrapolated; high level, +0 −1 dB, 2 Hz to 50 kHz, +0 −0.25, 10 Hz to 20 kHz.

Filters & Positions: Low cut, flat, 18 Hz, 36 Hz, 6 dB/octave (phono only); High cut, flat, 5 kHz, 10 kHz, 6 dB/octave.

Output Impedance: 1000 ohms.

Maximum Output Voltage: 6 volts into 10 kilohms. 7.8 V

Maximum Load for Rated Distortion: 10 kilohms and 3000 pF.

Input Sensitivity (For 1 Volt Output): Phono, 2.0 mV into 50 kilohms and 100 pF; High Level, 120 mV into 50 kilohms.

Phono Overload: 150 mV @ 1 kHz, 1.5 V @ 20 kHz, 16 mV @ 20 Hz.

Dimensions: 8.5 in. (21.6 cm) x 3.2 in. (8.1 cm) x 7 in. (17.8 cm).

Weight: 2.6 lbs. (1.2 kg).

Price: DB-1 preamp, $397.00; DB-2 power supply, $78.00; wood cabinet, $34.95.

DB-4 Moving Coil Cartridge Pre-Preamplifier

THD: Less than 0.0008 per cent 20 Hz to 20 kHz, 1 V output, Medium gain setting.

Noise: −83 dB ref. 1 mV, shorted input, RIAA, A weighted.

Frequency Response: +0, −0.1 dB, 10 Hz to 100 kHz.

Input Impedance: 9 kilohms and 2000 pF.

Output Impedance: 220 ohms.

Maximum Load for Rated Distortion: 10 kilohms and 3000 pF.

Gain/Overload: High gain, 30 dB gain, 73 mV input overload; Medium gain, 24 dB gain, 122 mV input overload; Low gain, 18 dB gain, 130 mV input overload.

Channel Balance: Within 0.2 dB.

Dimensions: 6.2 in. (15.7 cm) x 4.5 in. (11.4 cm) x 2.2 in. (5.6 cm).

Price: $150.00; power supply, $78.00. Supply not needed when used with DB-1 preamp.

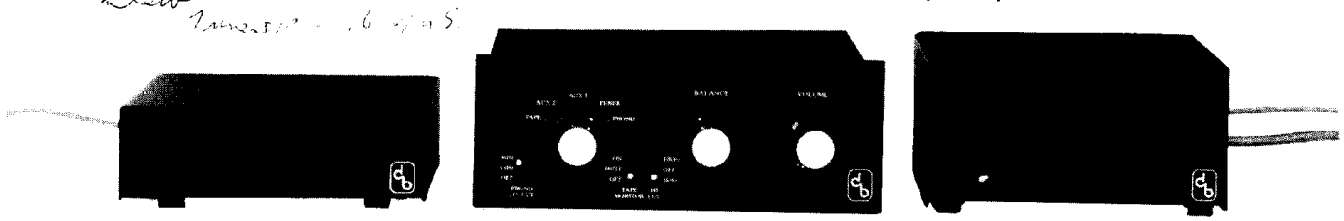

The DB-1 preamp and its companion DB-2 power supply is a fairly new, no frills, basic preamplifier of high quality currently selling for $475.00. Used in conjunction with the DB-4 pre-preamp, $150.00, it is capable of processing low level (moving coil) cartridge inputs in addition to the standard moving magnet cartridges.

The pre-preamplifier, if used, preamplifier, and power supply are separate units. The power supply has a 5-prong DIN connector through which its regulated 33 volts is delivered to the preamp's rear panel power socket. Another 5-prong DIN socket is provided on the rear of the preamp which allows the DB-4 pre-preamp to share power from the same power supply. Since this socket also has high level audio connections, the accessory DB-3 crossover (not tested)

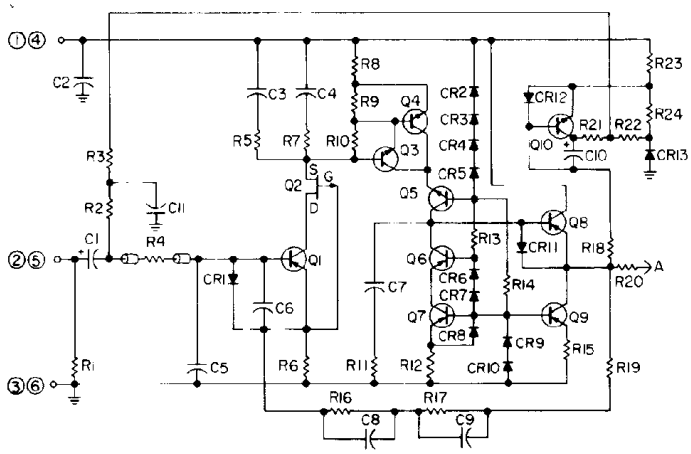

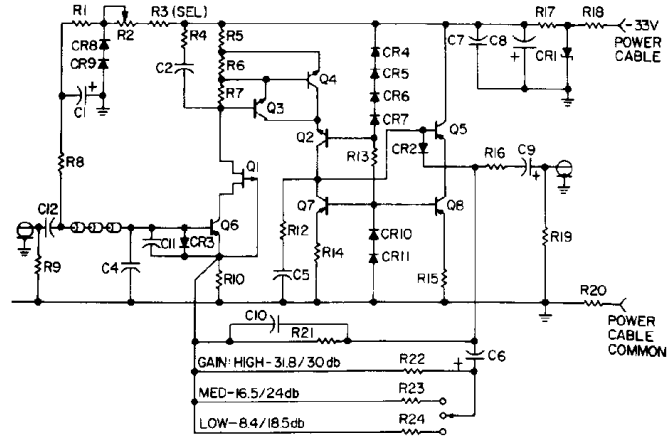

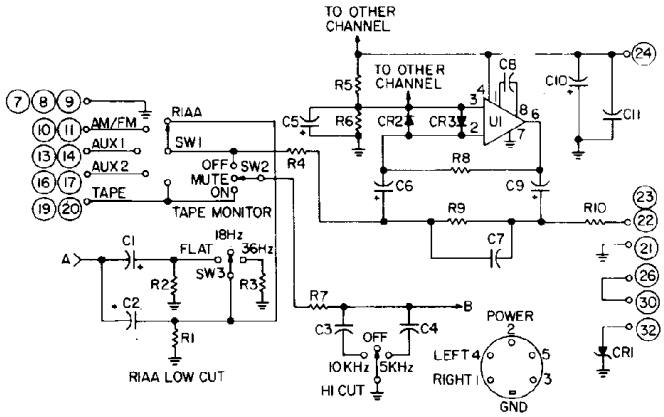

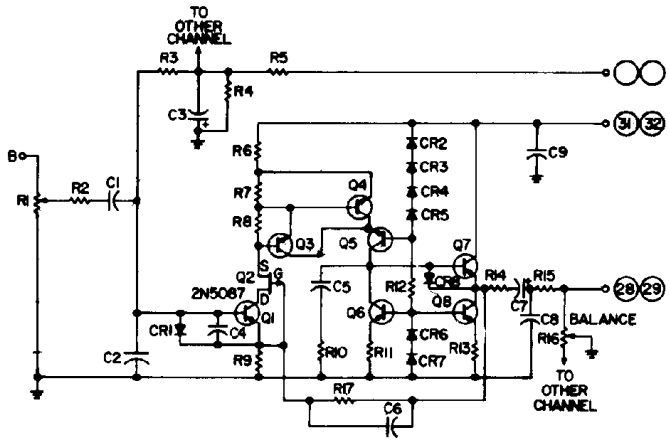

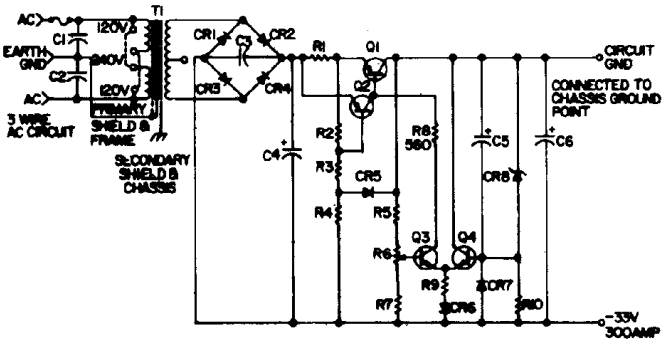

Fig. 1—Schematic diagrams of DB Systems phono section, filter and buffer, amplifier stage, power supply, and variable gain amp.

from the preamp's electronics to insure that the preamp's distortion will not noticeably rise with non-linear loads.

A not uncommon problem with many preamplifiers arises when operating in the *Phono* mode, with a tape machine connected to the *tape output* jacks. Low impedance tape inputs, or complicated nonlinear loads on this output caused by a tape machine's electronics being turned off, can seriously degrade the performance of the phono preamp stage. DB has chosen to eliminate this problem with an inverting buffer using a high slew rate operational amplifier fed back to unity gain.

Unique to the DB-1 and DB-4 is the amount of r.f. suppresssion provided on low level inputs. Both are extensively filtered with ferrite beads and disc ceramic bypass capacitors. DB Systems claims some 50-dB rejection at citizen band frequencies (27 mHz) in the DB-4 pre-preamp. Those living near large r.f. fields may find these products ease or eliminate their r.f. interference problems.

Measurements

As one would expect from a preamplification system design of this sort, the distortion products in the DB-4 and the DB-1 are vanishingly low at any output voltage below clipping. They are so low, in fact, that normal distortion measurements are impossible and the residuals were found to be below those generated in the finest commercially available test oscillators. DB Systems has specially constructed single frequency oscillators and filter sets, which in conjunction with a finely tuned spectrum analyzer, are used to measure distortion at three frequencies in every single unit produced.

It is this reviewer's opinion that such small quantities of THD and IM are not directly related to the sonic performance of either pre-preamplifiers, preamplifiers, or power amplifiers, and therefore no attempt was made to verify DB's claims. Let it be said, however, that both THD or IM distortion under normal conditions is below, and perhaps considerably below, 0.001 per cent for both the DB-1 and the DB-4. The manufacturer's specifications do show distortion figures, provided by DB Systems, to satisfy the reader's curiosity.

Frequency responses are shown in Fig. 2. The upper curve here shows the RIAA equalization error of the phono section of the DB-1 as measured with a non-inductive 50-ohm signal

db SYSTEMS
Pre Amp.

Line Section

ALL PNP -2N5087
FET 2N5461

THD - MEASURED WITH - INPUT TO PHONO
1V -20KHz -3V out
.1V -1KHz -3V "
10 mV -20Hz -3V "

THD < .0008% 20-20KHz.

NOISE PHONO -89db shorted
-83db W/CART. - A WEIGHTED.
-74db OPEN CCT. → .65W-650Ω.
HIGH LEVEL -90 db -1V out Ref.

F.R. PHONO ±.25db 5Hz-20KHz RIAA

HIGH LEVEL +0 -1db 2Hz-50KHz.
-.25db -10Hz-20KHz

FILTERS = 6db/OCT.
O/P Z = 1K
MAX O/P VOLTS = 6V INTO 10KΩ
MAX LOAD FOR RATED DIST - 10KΩ & 3000pF

SENS - 1V OUT FOR 2mV PHONO (50K & 100p).
120mV - 50K HIGH LEVEL

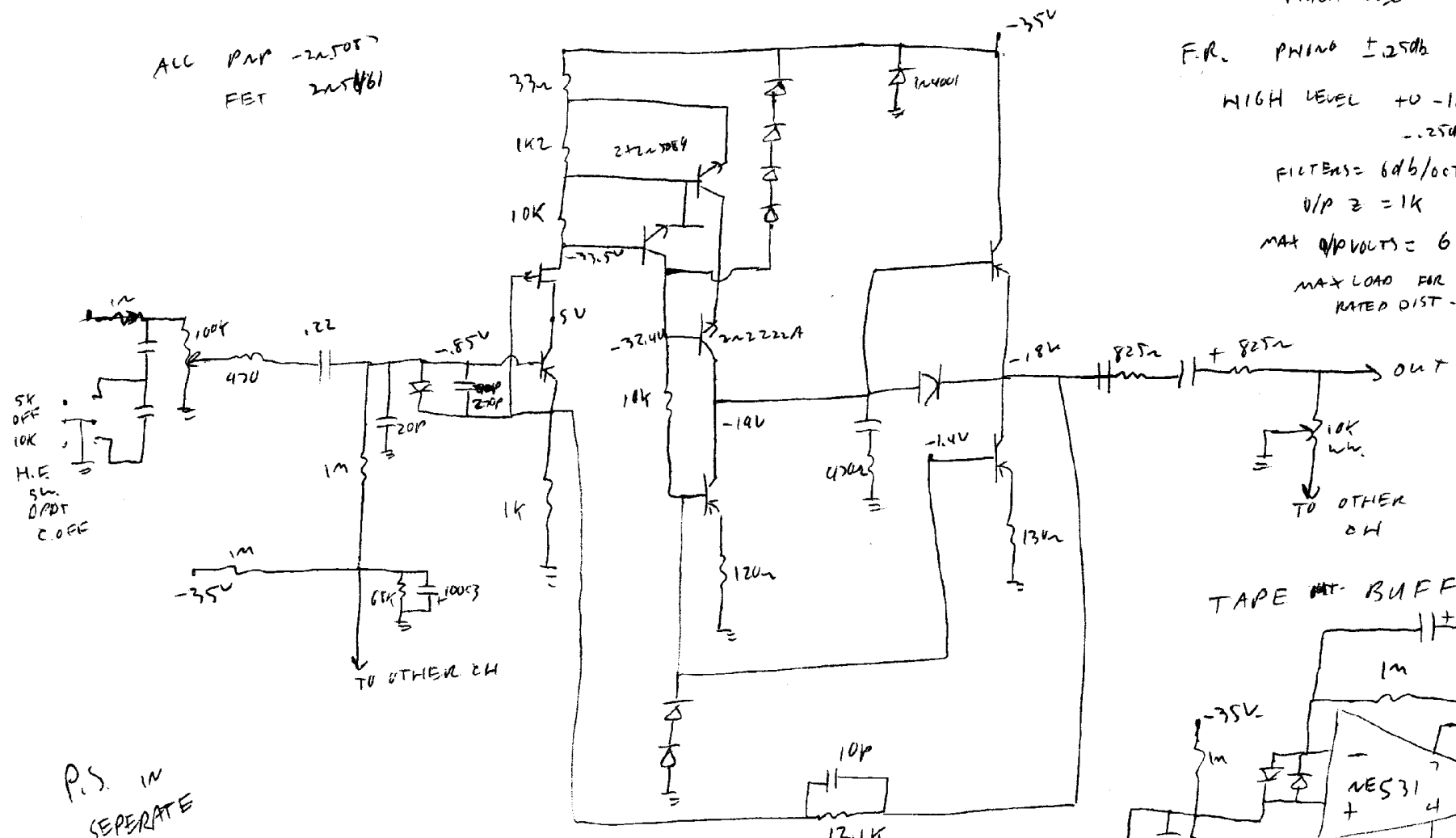

TAPE BUFFER

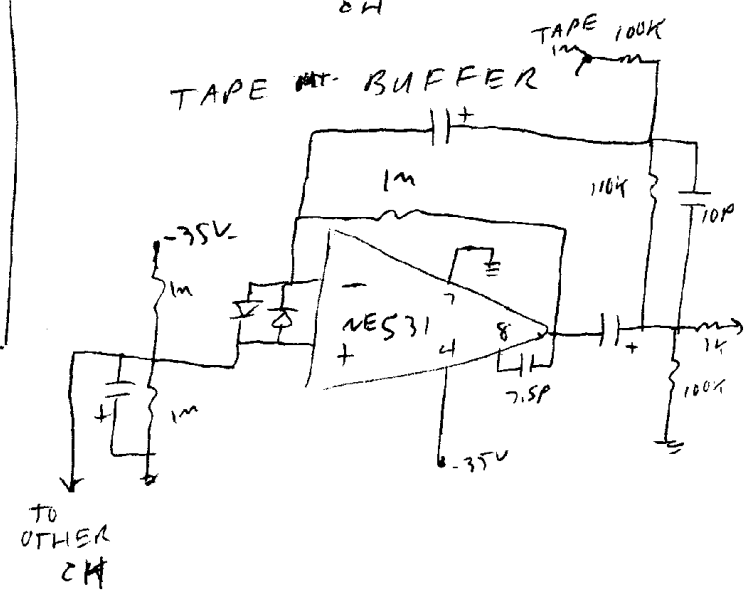

P.S. IN SEPERATE BOX

d/b SYSTEMS

PRE AMP

PHONO SECTION

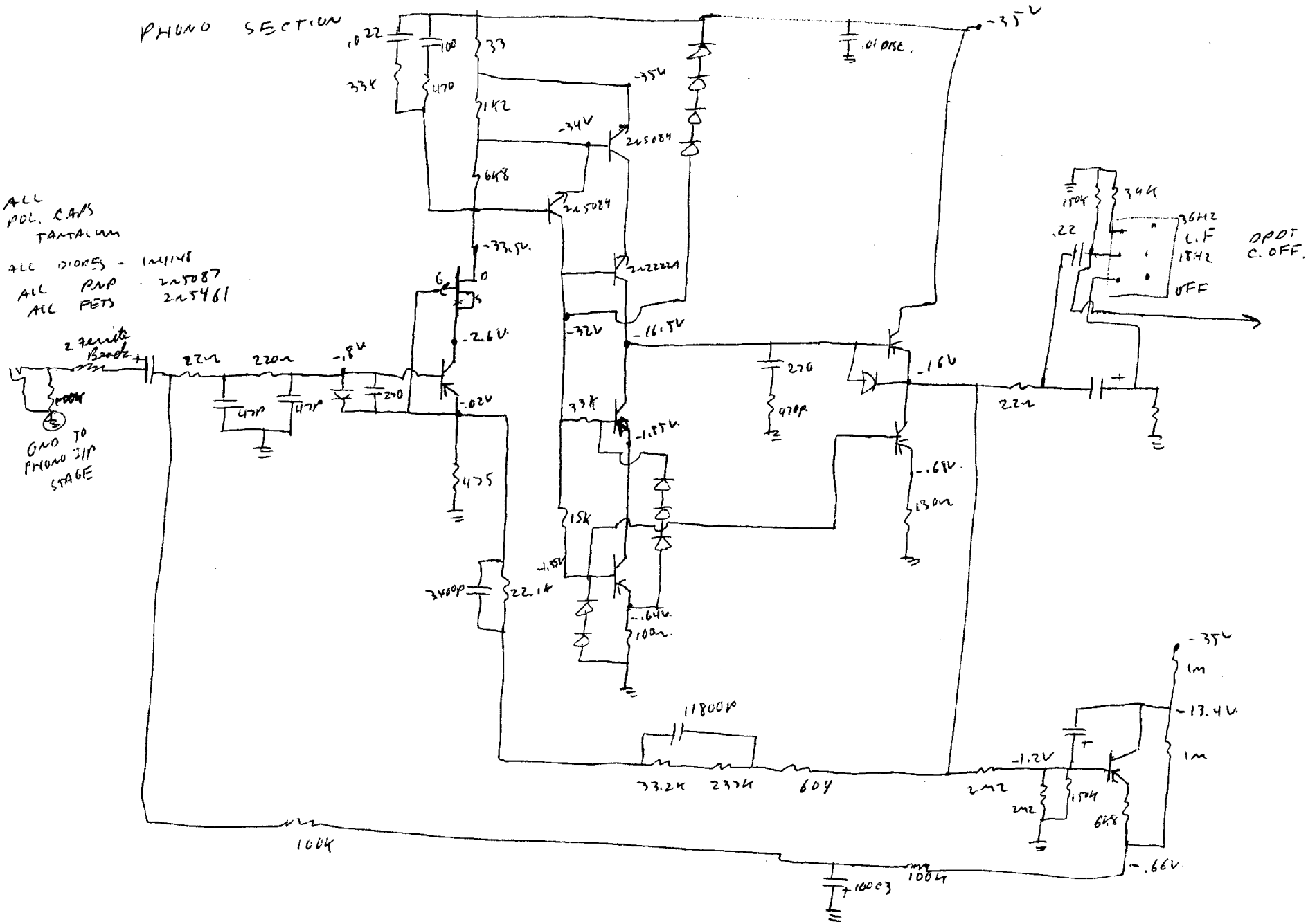

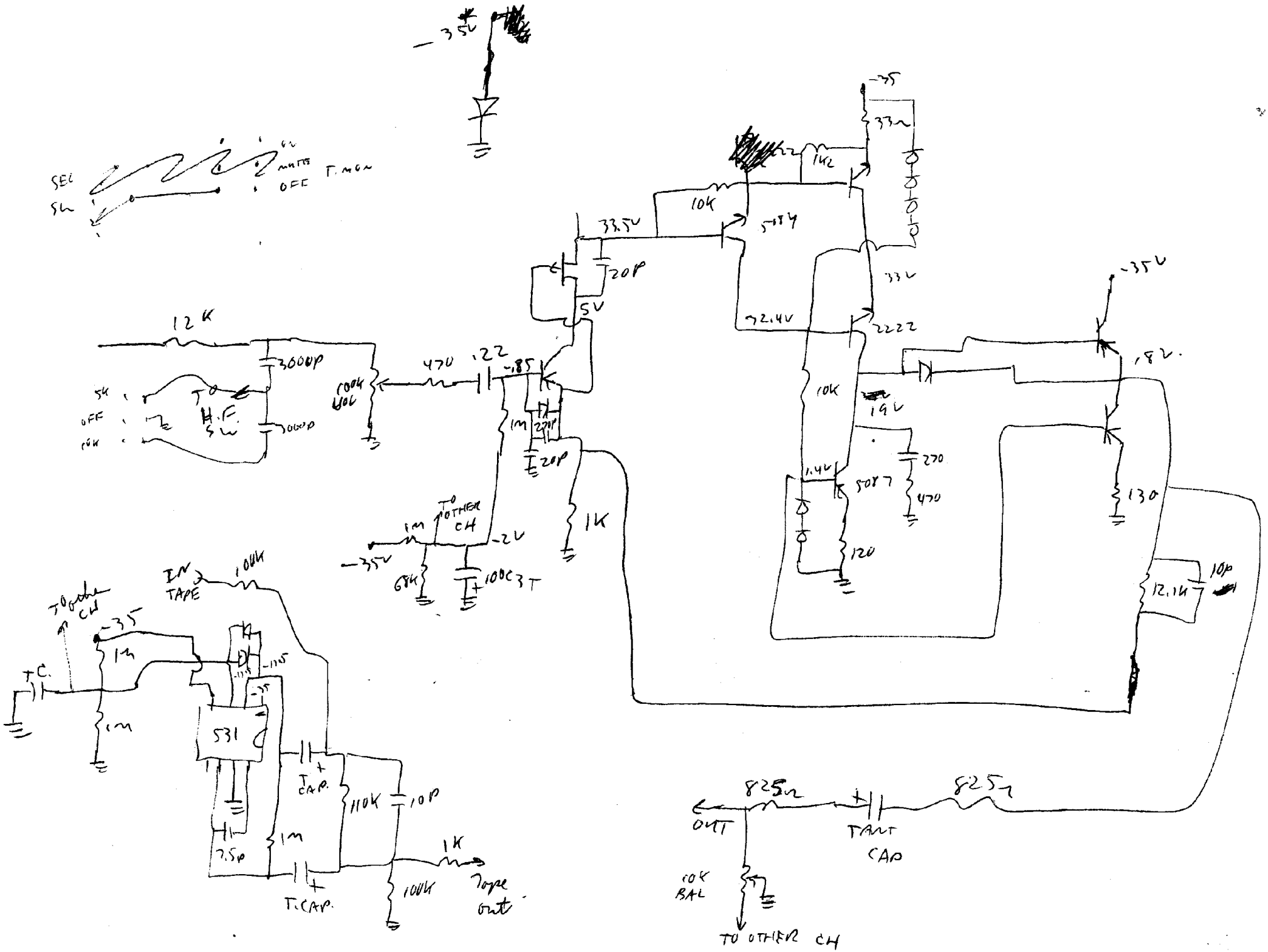
-35V
SEL
5K
MUTE
OFF
T. MON
12K
3000P
5K
OFF
10K
H.F. SW
100K VOL
470
.22
.85
1M
270P
20P
5V
33.5V
10K
5.84
20P
1K
1M
TO OTHER CH
-2V
-35V
68K
100C3T
IN TAPE
100K
TO other CH
-35
1M
T.C.
1M
531
-11.5
-35
T. CAP.
110K
10P
1M
7.5P
T. CAP.
100K
1K
Tape out
-35
33Ω
1K2
10K
33V
2.4V
2222
10K
19V
270
470
1.4V
5087
120
-35V
.82
130
12.1K
10P
825Ω
825Ω
OUT
TANT CAP
10K BAL
TO OTHER CH

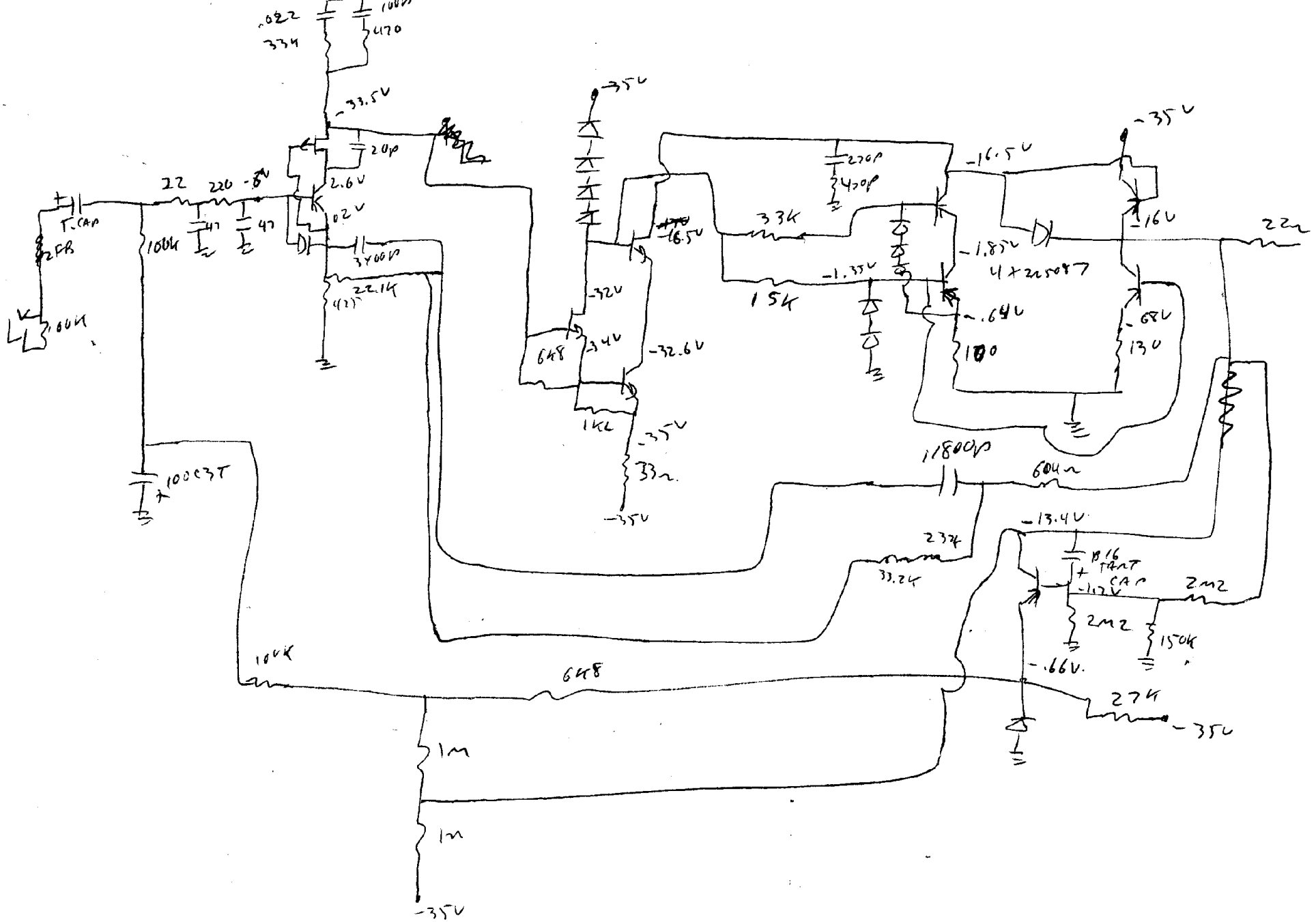
.022
334
470
-33.5V
20p
2.6V
.02V
22
220
-5V
47
47
T. CAP
2FB
100K
100K
3400V
22.1K
(47)
-35V
-16.5V
-32V
-32.6V
648
1K2
33Ω
-35V
33K
1.5K
270P
470P
-1.85V
-1.35V
-.64V
100
4 x 2N5087
-16V
-.68V
130
22Ω
1800VP
604Ω
-13.4V
B16 TANT CAP
-1.12V
2M2
2M2
150K
-.66V
27K
-35V
33.2K
100CBT
100K
648
1M
1M
-35V

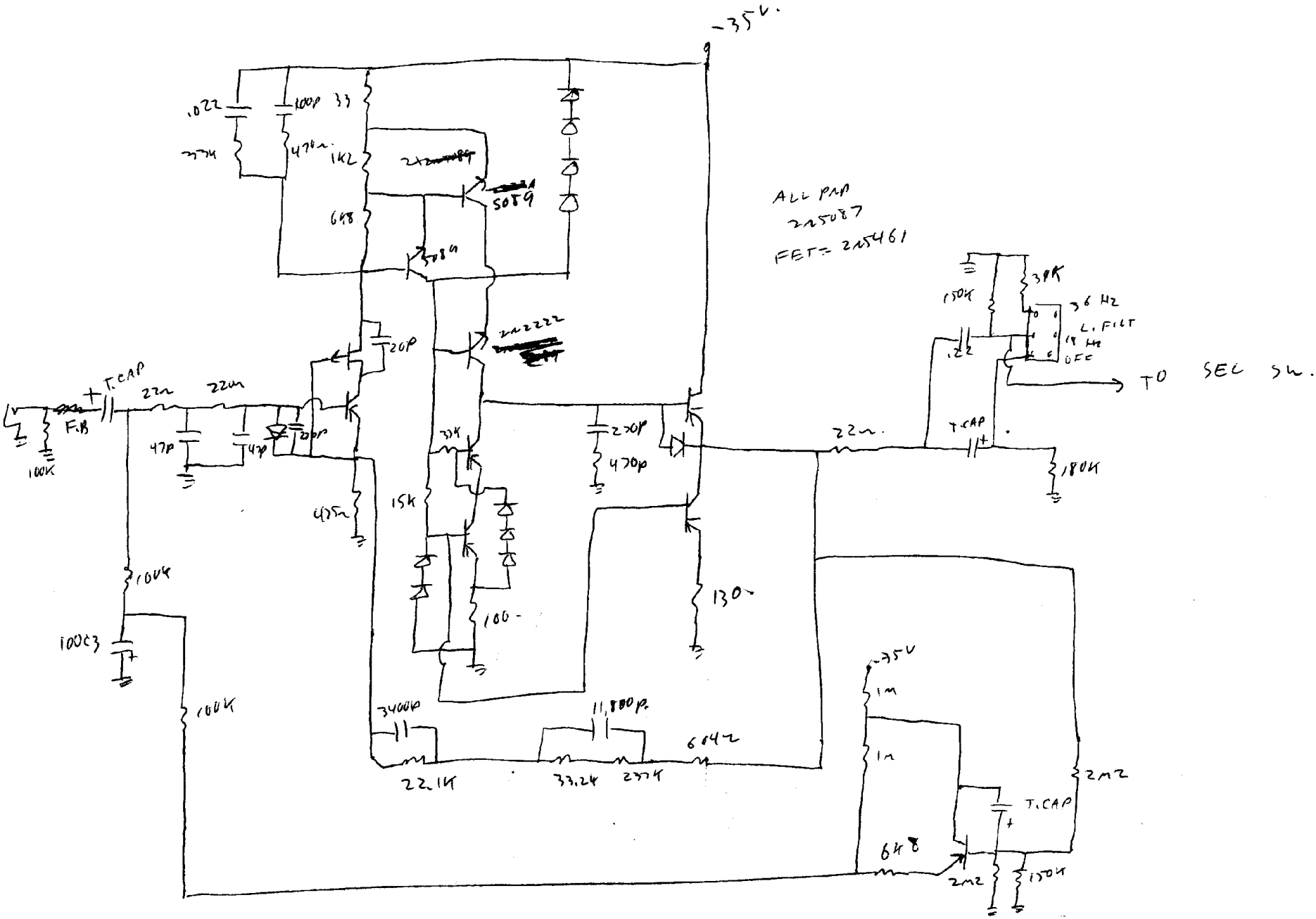
-35V.
ALL PNP
225087
FET = 225461
TO SEC SW.
T.CAP
F.B
100K
22n
220n
47p
20p
475n
15K
30K
100K
100C3
100K
3400p
22.1K
11,800p
33.2K
237K
604Z
470p
230p
130
100
1m
1m
-75V
64K
2M2
2M2
T.CAP
150K
180K
150K
3.6 Hz
L. FILT
OFF
1K2
68K
100p
33
470n
.022
237K
5089