REV	DISCRIPTION	ECN	DATE
P0	PROTOTYPE		4-22-96
P1	PROTOTYPE		6-20-96
P2	PROTOTYPE		8-7-96
P3	PROTOTYPE		9-21-96
P4	PROTOTYPE		10-1-96
P5	PROTOTYPE		10-17-96
A0	PRE-PRODUCTION		10-26-96
A1	PRODUCTION RELEASE		12-2-96
A2	ADD TWO SHUNT JUMPERS (32-1075) TO SCH AND BOM	1352	1.30.97
A3	CHANGE U63 TO V1.01 SOFTWARE	1373	2.17.97
A4	CHANGE SW10-SW16 FROM 44-0083 TO 44-0077	1394	2.17.97
A5	CHG U63 TO V1.02, R411 TO 10K, R426 TO 7.5K	1410	2-25-97
A6	CHANGE LIGHT TOUCH SWITCHES FROM 44-0077 TO 44-0083.	1553	4-23-97
A7	CHANGE U63 FROM VERSION 1.02 TO VERSION 1.03.	1598	5-12-97
A8	INSTALL 220pF SMT (62-3138) AT C72.	1633	5-22-97
A9	CHANGE SDISC TO 72-3181.	1815	10-3-97
AA	OMIT RESISTORS R228 AND R238.	1850	10-30-97
AB	CHANGE C72 TO 62-0022, TIE TO ANALOG GROUND.	1903	11-19-97
AC	CHANGES TO REV A BOARDS TO CREATE 2120 VGS ARTIST PRODUCT	2014	2-12-98

REV		ECN	DATE

|LINK
|056280AC.001
|056280AC.002
|056280AC.003
|056280AC.004
|056280AC.005
|056280AC.006
|056280AC.007
|056280AC.008
|056280AC.009
|056280AC.010
|056280AC.011

Digitech

8760 South Sandy Parkway
Sandy, Utah 84070

Title
GSP-2112 / 2120 VGS ARTIST MAIN BOARD

Size	Document Number	Rev
B	056280AC.000	AC

Date: Wednesday, August 02, 2000 Sheet 0 of 11

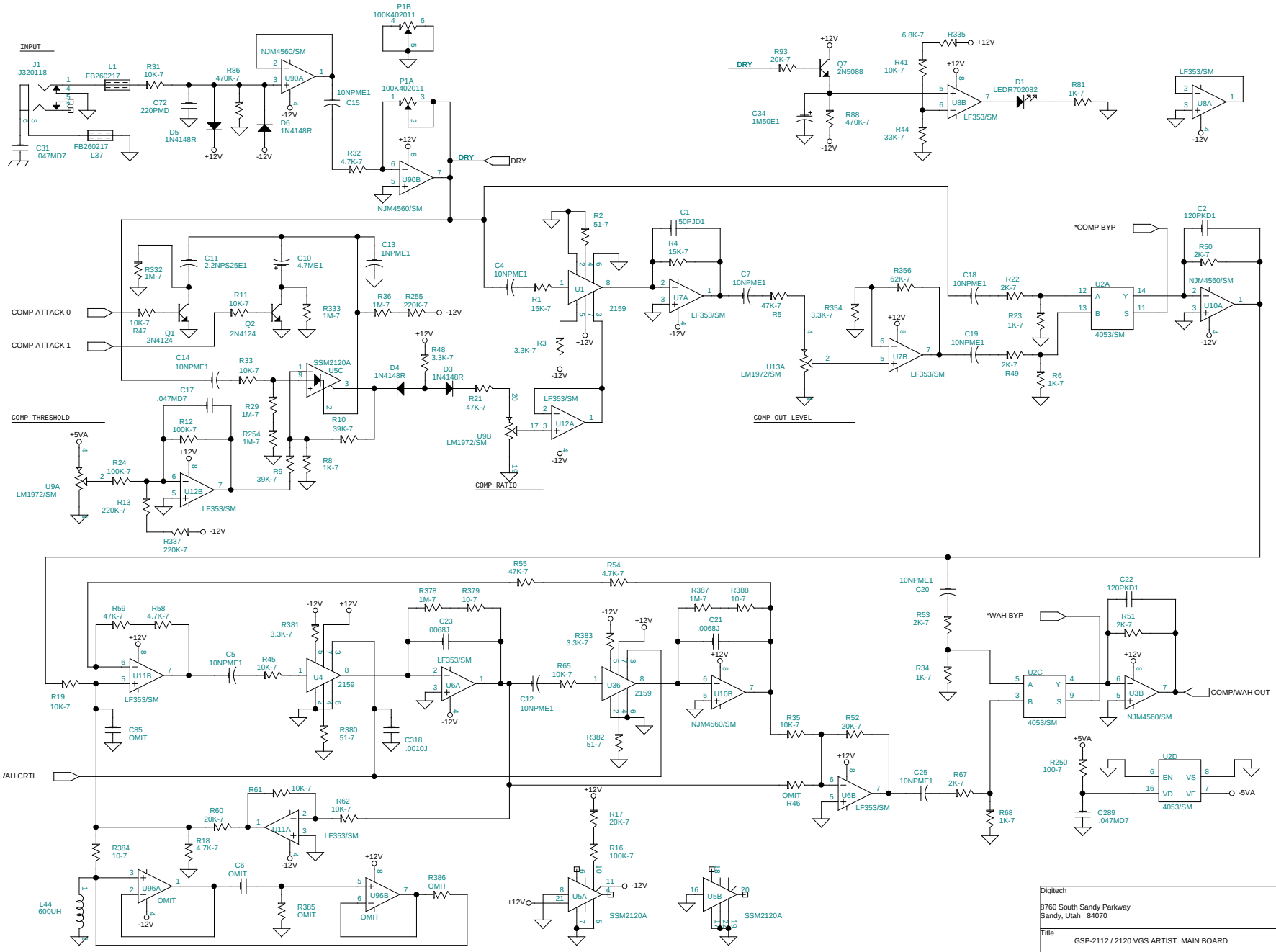

Digitech 8760 South Sandy Parkway Sandy, Utah 84070		
Title GSP-2112 / 2120 VGS ARTIST MAIN BOARD		
Size B	Document Number 056280AC.001	Rev AC
Date: Wednesday, August 02, 2000	Sheet 1 of 11	

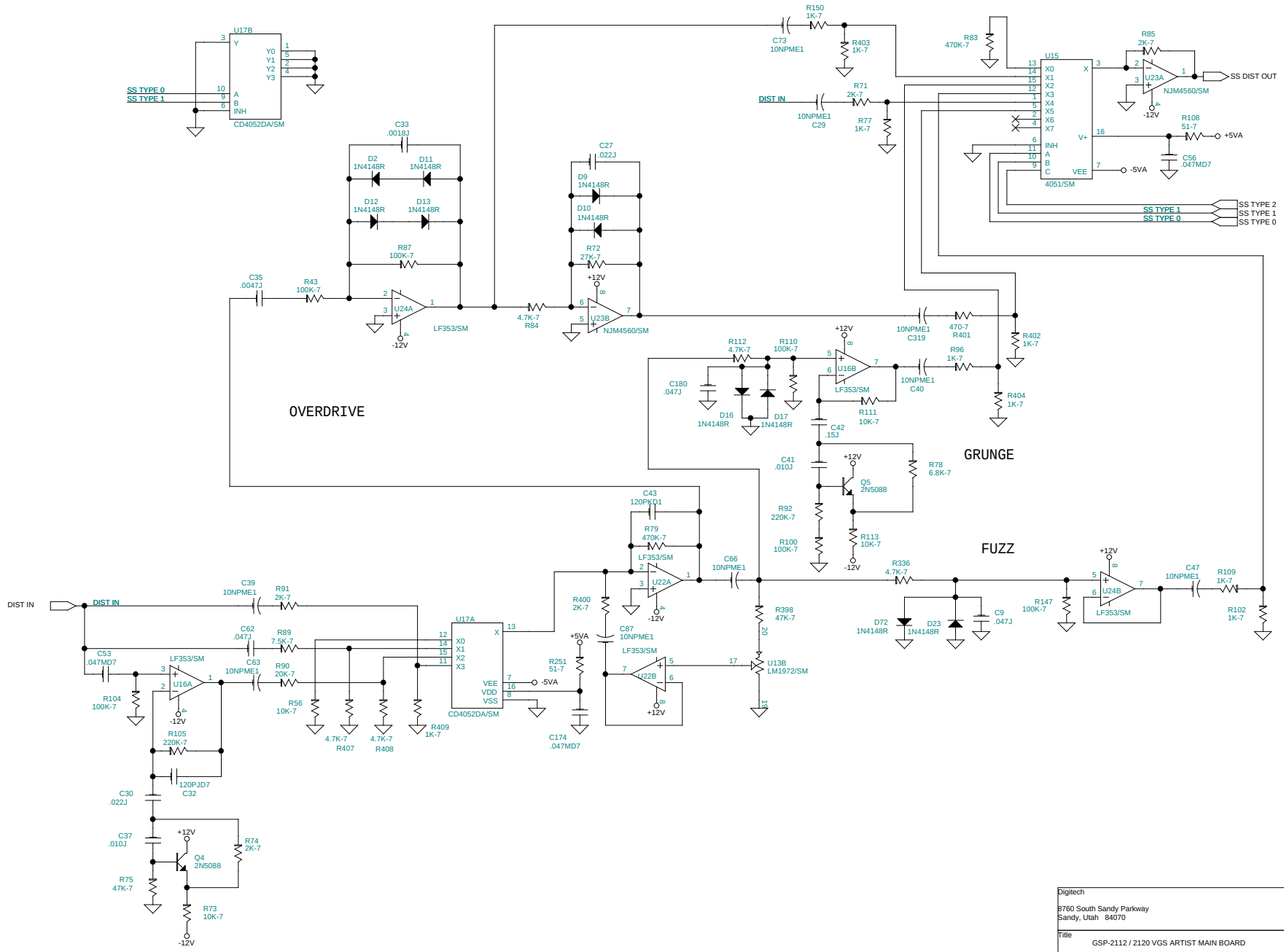

Digitech 8760 South Sandy Parkway Sandy, Utah 84070			
Title GSP-2112 / 2120 VGS ARTIST MAIN BOARD			
Size B	Document Number 056280AC.002		Rev AC
Date: Wednesday, August 02, 2000	Sheet 2 of 11		

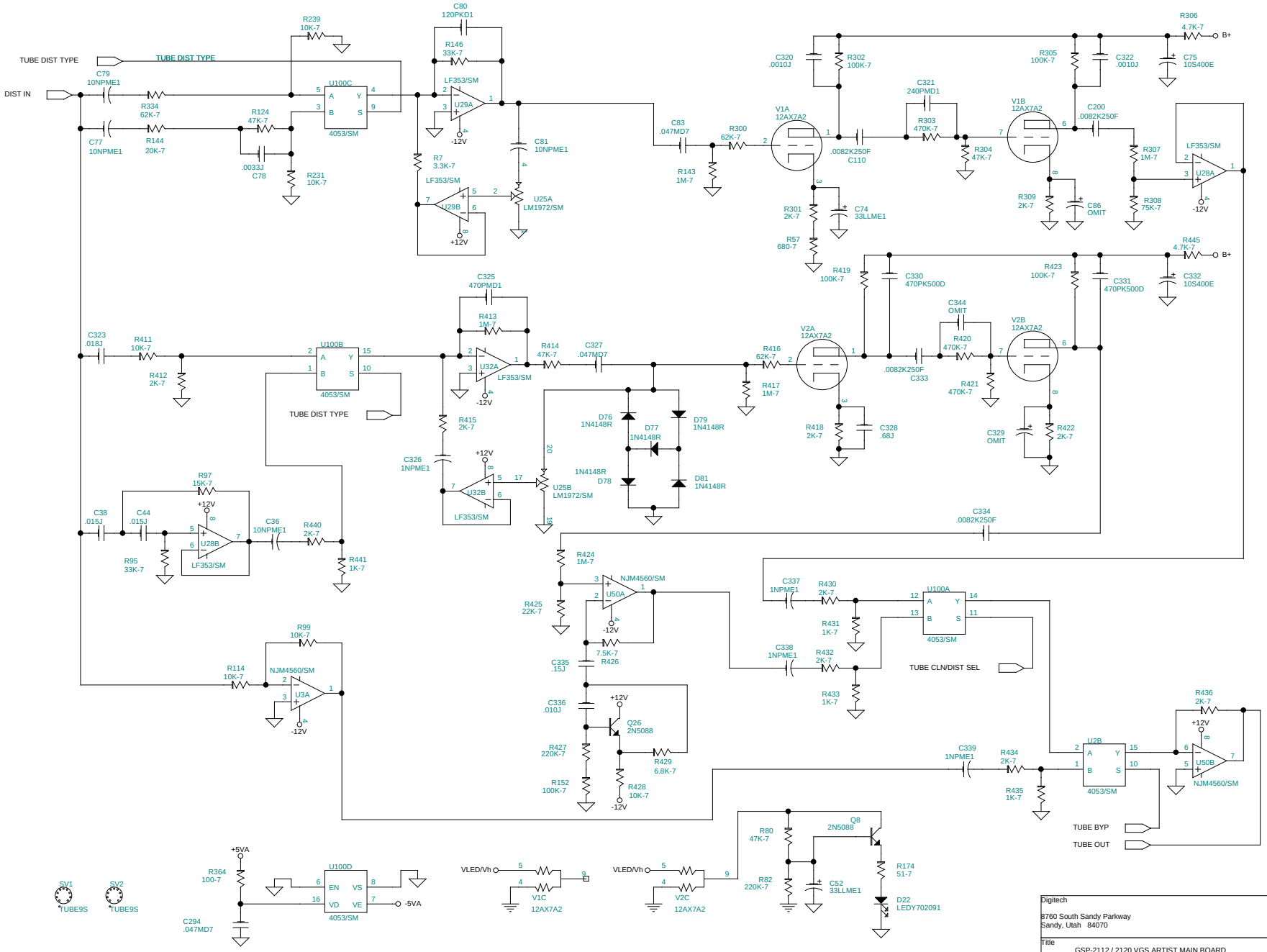

Digitech
8760 South Sandy Parkway
Sandy, Utah 84070

Title: GSP-2112 / 2120 VGS ARTIST MAIN BOARD

Size: B | Document Number: 056280AC.003 | Rev: AC

Date: Wednesday, August 02, 2000 | Sheet 3 of 11

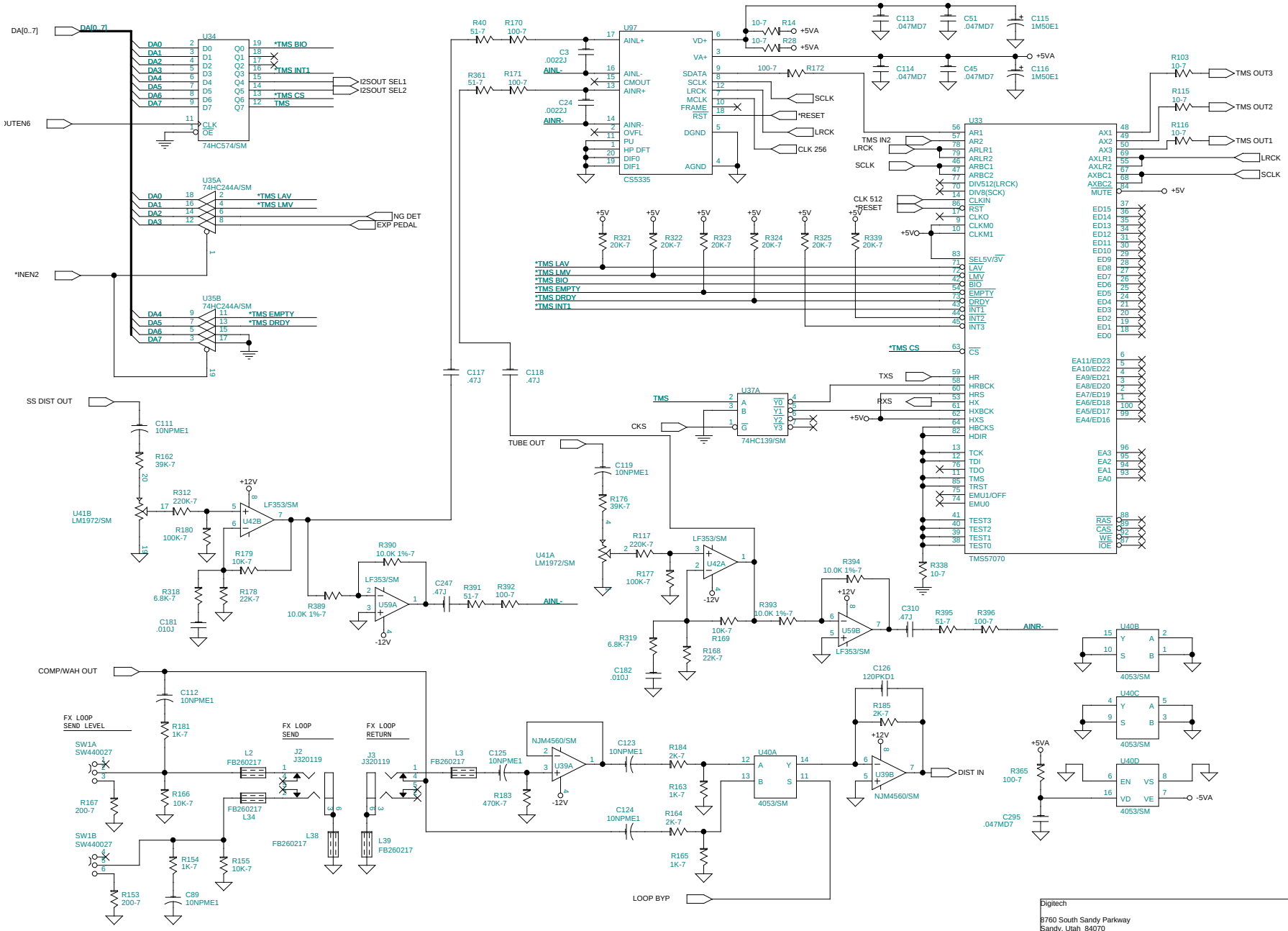

Digitech

8760 South Sandy Parkway
Sandy, Utah 84070

Title: GSP-2112 / 2120 VGS ARTIST MAIN BOARD

Size	Document Number	Rev
B	056280AC.004	AC

Date: Wednesday, August 02, 2000 Sheet 4 of 11

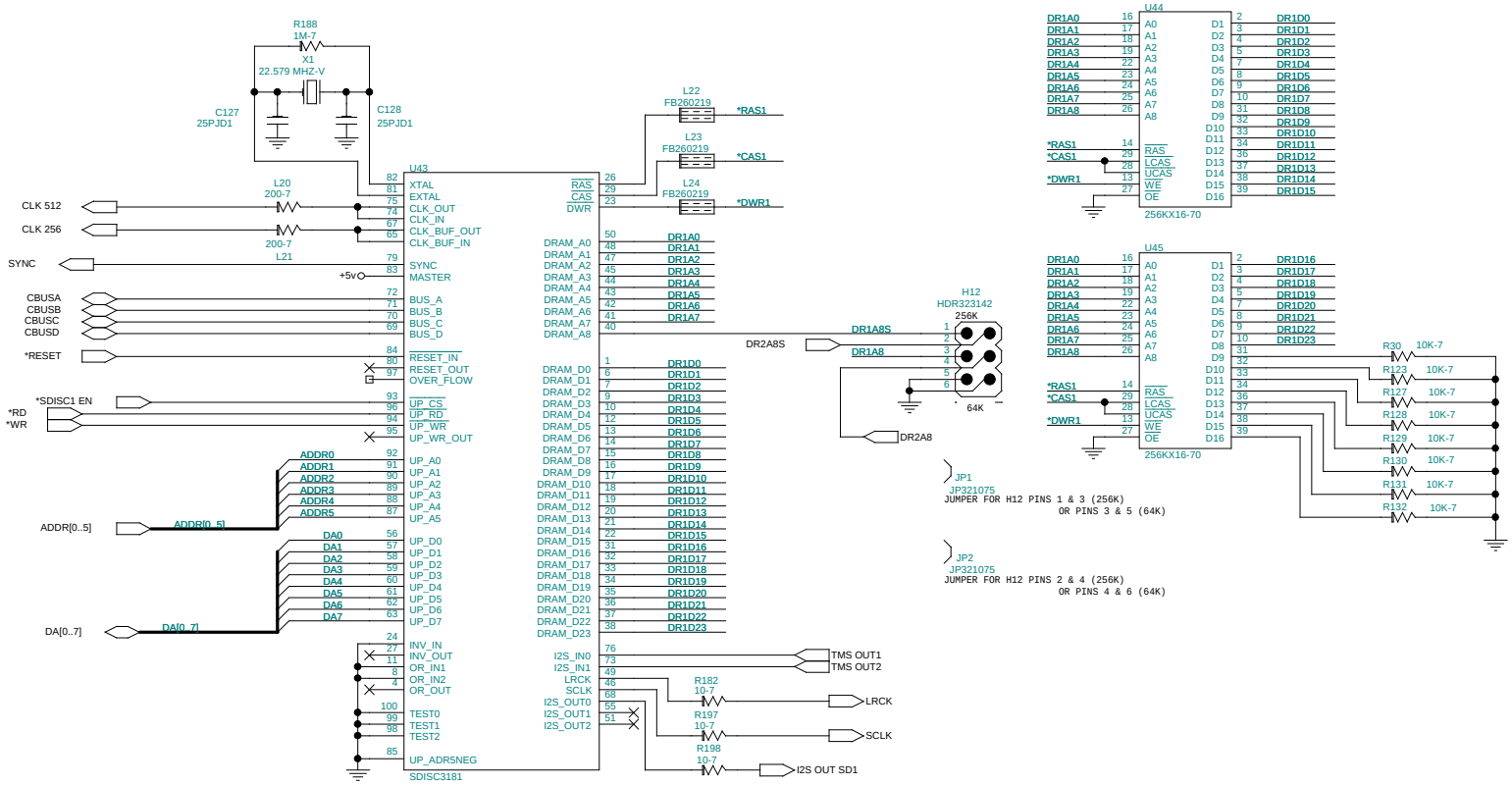

SDISC#1

Digitech 8760 South Sandy Parkway Sandy, Utah 84070		
Title GSP-2112 / 2120 VGS ARTIST MAIN BOARD		
Size B	Document Number 056280AC.005	Rev AC
Date: Wednesday, August 02, 2000	Sheet 5 of 11	

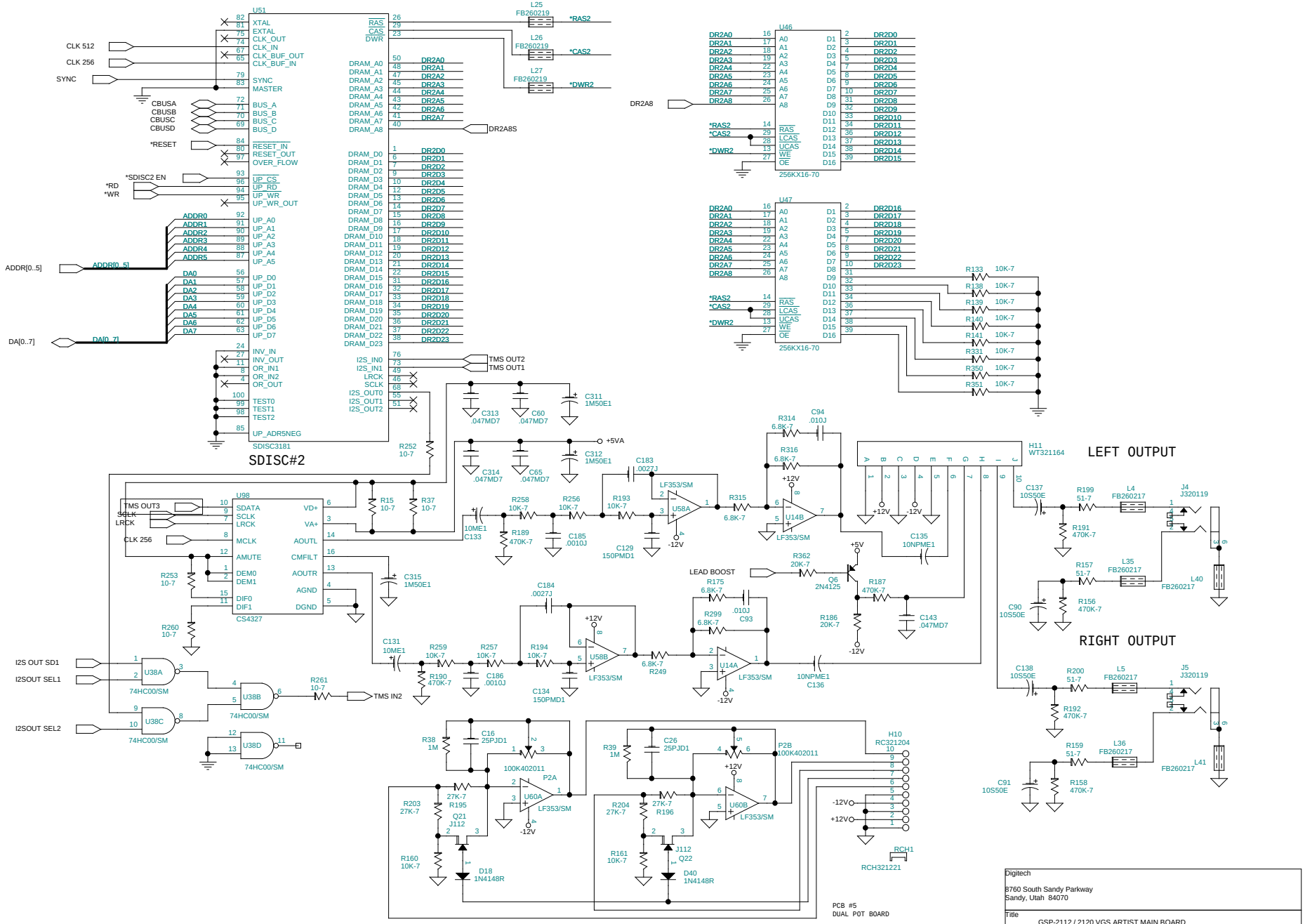
SDISC#2
SDISC3181
U51
CLK 512
CLK 256
SYNC
CBUSA
CBUSB
CBUSC
CBUSD
*RESET
*SDISC2 EN
*RD
*WR
ADDR[0..5]
DA[0..7]
TMS OUT2
TMS OUT1
*RAS2
*CAS2
*DWR2
DR2A8S
U46
256KX16-70
U47
256KX16-70
DR2A8
LEFT OUTPUT
RIGHT OUTPUT
H11
WT321164
U98
CS4327
TMS OUT3
SCLK
LRCK
CLK 256
LEAD BOOST
TMS IN2
I2S OUT SD1
I2SOUT SEL1
I2SOUT SEL2
U38A
U38B
U38C
U38D
74HC00/SM
H10
RC321204
RCH1
RCH321221
PCB #5
DUAL POT BOARD
Digitech
8760 South Sandy Parkway
Sandy, Utah 84070
Title
GSP-2112 / 2120 VGS ARTIST MAIN BOARD
Size
B
Document Number
056280AC.006
Rev
AC
Date:
Wednesday, August 02, 2000
Sheet
6
of
11

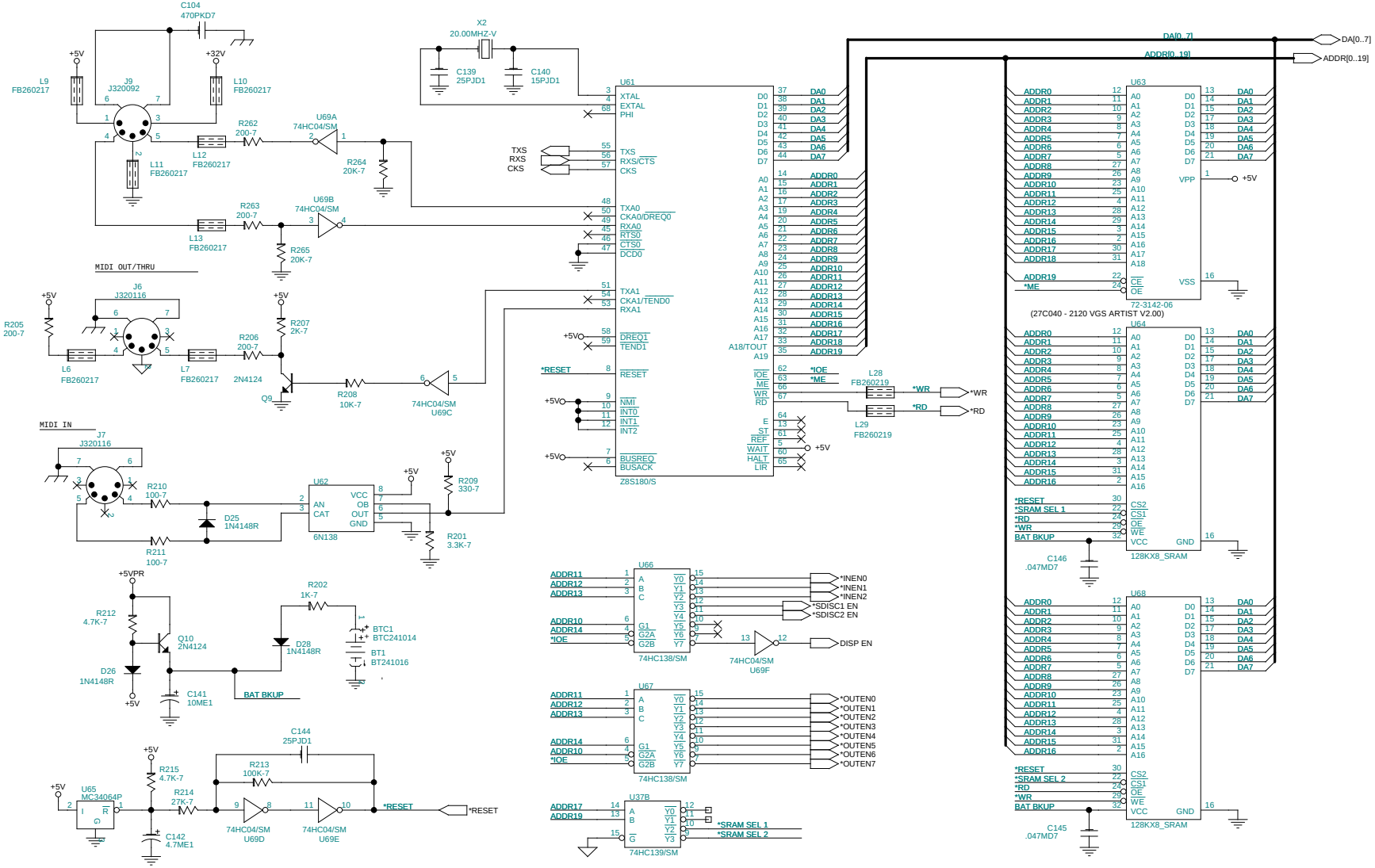

Digitech

8760 South Sandy Parkway
Sandy, Utah 84070

Title: GSP-2112 / 2120 VGS ARTIST MAIN BOARD

Size	Document Number	Rev
B	056280AC.007	AC

Date: Wednesday, August 02, 2000 Sheet 7 of 11

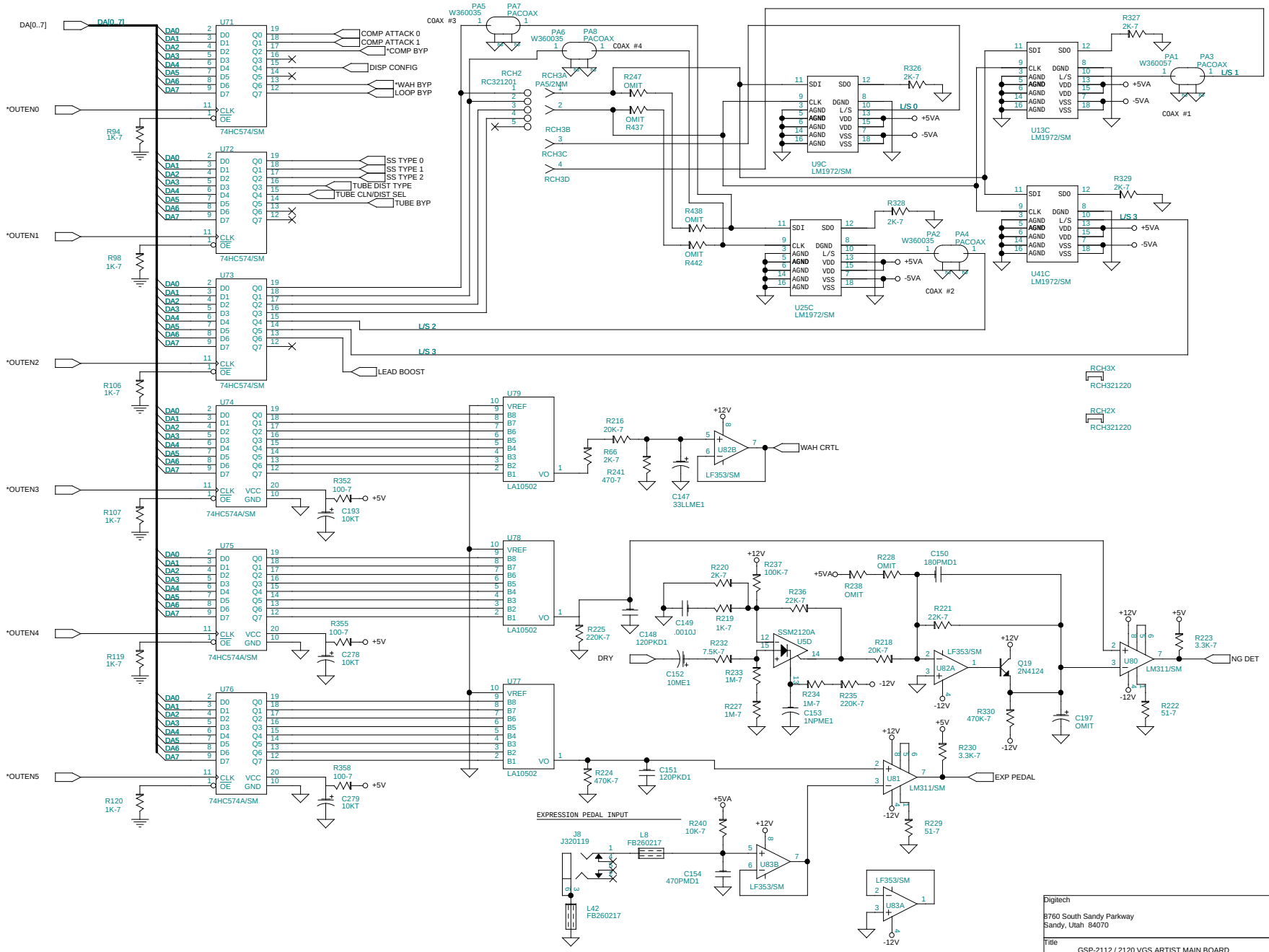

Digitech

8760 South Sandy Parkway
Sandy, Utah 84070

Title

GSP-2112 / 2120 VGS ARTIST MAIN BOARD

Size	Document Number	Rev
B	056280AC.008	AC

Date: Wednesday, August 02, 2000 Sheet 8 of 11

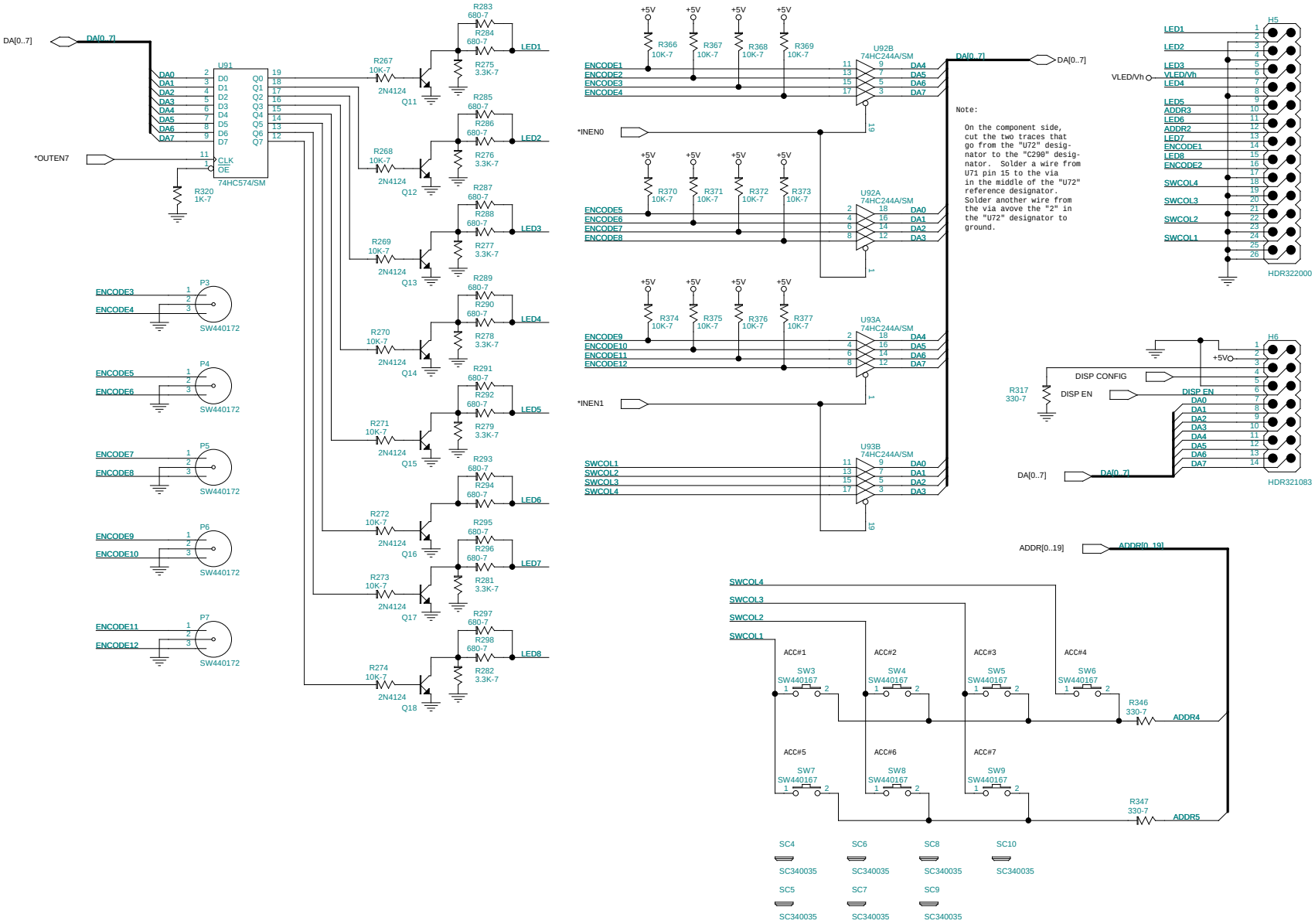

Digitech

8760 South Sandy Parkway
Sandy, Utah 84070

Title
GSP-2112 / 2120 VGS ARTIST MAIN BOARD

Size	Document Number	Rev
B	056280AC.009	AC

Date: Wednesday, August 02, 2000 Sheet 9 of 11

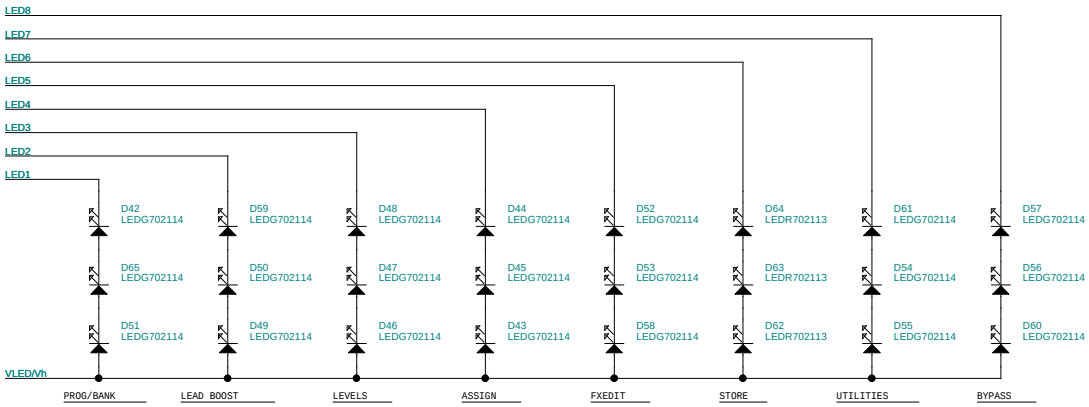

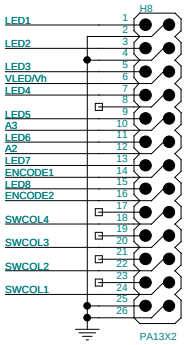

PCB #3
FRONT SWITCH/LED BOARD

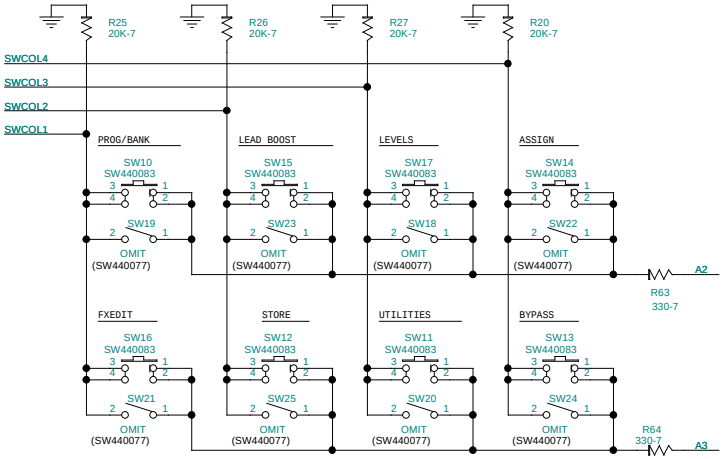

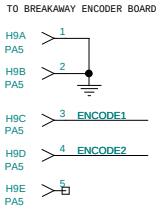

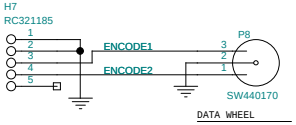

PCB #4
BREAKAWAY ENCODER BOARD

Digitech 8760 South Sandy Parkway Sandy, Utah 84070			
Title GSP-2112 / 2120 VGS ARTIST MAIN BOARD			
Size B	Document Number 056280AC.010		Rev AC
Date: Wednesday, August 02, 2000	Sheet 10 of 11		

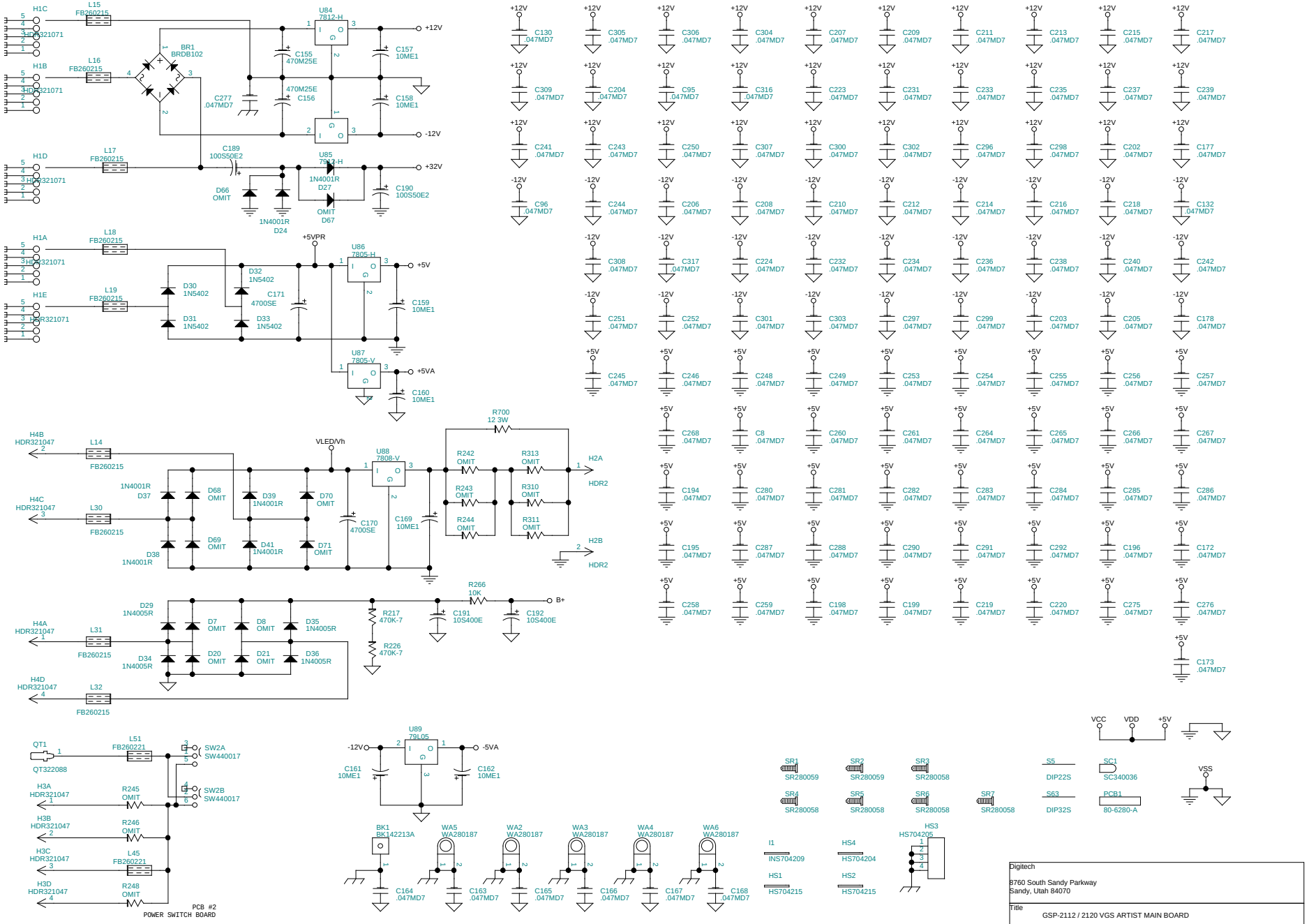

Digitech 8760 South Sandy Parkway Sandy, Utah 84070	
Title GSP-2112 / 2120 VGS ARTIST MAIN BOARD	
Size B	Document Number 056280AC.011	Rev AC
Date: Wednesday, August 02, 2000	Sheet 11 of 11

GSP-2112 / 2120 VGS ARTIST MAIN BOARD Revised: February 12, 1998
056280AC.001 Revision: AC
Bill Of Materials February 16, 1998 10:39:08

Quan	Reference	Part	SYMAN	Description
1	BK1	BK142213A	14-2213-A	Bracket, R/A, EMI Grounding, 2H Tapped 6-32
1	BR1	BRDB102	70-0129	Bridge Rectifer
1	BT1	BT241016	24-1016	3V Battery, Lithium, Eveready Part #CR2032
1	BTC1	BTC241014	24-1014	Holder For 3V Battery
1	C1	50PJD1	62-0008	50 pF Cap 50V 5% Ceramic Disc T&R
7	C2,C22,C43,C80,C126,C148, C151	120PKD1	62-0002	120 pF Cap 50V 10% Ceramic Disc T&R
2	C3,C24	.0022J	56-0002	.0022 uF Cap 50V 5% Poly Film 222J ammo
32	C4,C5,C7,C12,C14,C15,C18, C19,C20,C25,C29,C36,C39, C40,C47,C63,C66,C73,C77, C79,C81,C87,C89,C111, C112,C119,C123,C124,C125, C135,C136,C319	10NPME1	60-0051-01	10 uF Cap 16V -20/+20% Elect., NP T&R
43	C6,D7,D8,SW18,SW19,D20, SW20,D21,SW21,SW22,SW23, SW24,SW25,R46,D66,D67, D68,D69,D70,D71,C85,C86, U96,C197,R228,R238,R242, R243,R244,R245,R246,R247, R248,R310,R311,R313,C329, C344,R385,R386,R437,R438, R442	OMIT	00-0000	This part has been omitted
128	C8,C17,C31,C45,C51,C53, C56,C60,C65,C83,C95,C96, C113,C114,C130,C132,C143, C145,C146,C163,C164,C165, C166,C167,C168,C172,C173, C174,C177,C178,C194,C195, C196,C198,C199,C202,C203, C204,C205,C206,C207,C208, C209,C210,C211,C212,C213, C214,C215,C216,C217,C218, C219,C220,C223,C224,C231, C232,C233,C234,C235,C236, C237,C238,C239,C240,C241, C242,C243,C244,C245,C246, C248,C249,C250,C251,C252, C253,C254,C255,C256,C257, C258,C259,C260,C261,C264, C265,C266,C267,C268,C275, C276,C277,C280,C281,C282, C283,C284,C285,C286,C287, C288,C289,C290,C291,C292, C294,C295,C296,C297,C298, C299,C300,C301,C302,C303, C304,C305,C306,C307,C308, C309,C313,C314,C316,C317, C327	.047MD7	62-3129	.047 uF Cap 50V 20% Cerm, SMT 0805
3	C9,C62,C180	.047J	56-0010	.047 uF Cap 50V 5% Stacked Metal Pet 473J ammo
2	C10,C142	4.7ME1	60-0048-01	4.7 uF Cap 16V -20/+20% Elect., T&R
1	C11	2.2NPS25E1	60-0043	2.2 uF Cap 25V -20/+80% Elect., NP T&R

GSP-2112 / 2120 VGS ARTIST MAIN BOARD Revised: February 12, 1998
056280AC.001 Revision: AC
Bill Of Materials February 16, 1998 10:39:08
Quan Reference Part SYMAN Description

```
  6  C13,C153,C326,C337,C338,  1NPME1     60-0046-01   1.0   uF Cap  16V -20/+20%  Elect., N.P. T&R
     C339
  6  C16,C26,C127,C128,C139,   25PJD1     62-0001      25    pF Cap  50V   5%      Ceramic Disc T&R
     C144
  2  C21,C23                   .0068J     56-0005      .0068 uF Cap  50V 5% Poly Film 682J ammo
  2  C27,C30                   .022J      56-0008      .022  uF Cap  50V 5% Poly Film 223J ammo
  1  C32                       120PJD7    62-3135      120   pF Cap  50V   5%      Cerm, SMT 0805
  1  C33                       .0018J     56-0026      .0018 uF Cap  50V 5% Poly Film 182J ammo
  6  C34,C115,C116,C311,C312,  1M50E1     60-0044-01   1.0   uF Cap  50V -20/+20%  Elect., T&R C&F
     C315
  1  C35                       .0047J     56-0004      .0047 uF Cap  50V 5% Poly Film 472J ammo
  7  C37,C41,C93,C94,C181,     .010J      56-0006      .010  uF Cap  50V 5% Poly Film 103J ammo
     C182,C336
  2  C38,C44                   .015J      56-0007      .015  uF Cap  50V 5% Poly Film 153J ammo
  2  C42,C335                  .15J       56-0013      .15   uF Cap  50V 5% Stacked Metal Pet 154J ammo
  3  C52,C74,C147              33LLME1    60-0059-01   33    uF Cap  16V  20%      Elect., LL T&R
  1  C72                       220PMD     62-0022      220   pF Cap  50V  20%      Ceramic Disc T&R
  4  C75,C191,C192,C332        10S400E    60-0310      10    uF Cap 400V -20/+80%  Elect
  1  C78                       .0033J     56-0003      .0033 uF Cap  50V 5% Poly Film 332J ammo
  4  C90,C91,C137,C138         10S50E     60-0090      10    uF Cap  50V -20/+80%  Elect
  1  C104                      470PKD7    62-3133      470   pF Cap  50V  10%      Cerm, SMT 0805
  4  C110,C200,C333,C334       .0082K250F 56-2219      .0082 uF Cap 250V  10%      Poly Film
  4  C117,C118,C247,C310       .47J       56-0016      .47   uF Cap  50V 5% Stacked Metal Pet 474J ammo
  2  C129,C134                 150PMD1    62-0031      150   pF Cap  50V  20%      Ceramic Disc T&R
 11  C131,C133,C141,C152,C157, 10ME1      60-0049-01   10    uF Cap  16V -20/+20%  Elect.,-D Ammo
     C158,C159,C160,C161,C162,
     C169
  1  C140                      15PJD1     62-0007      15    pF Cap  50V   5%      Ceramic Disc T&R
  6  C149,C185,C186,C318,C320, .0010J     56-0000      .0010 uF Cap  50V 5% Poly Film 102J ammo
     C322
  1  C150                      180PMD1    62-0021      180   pF Cap  50V  20%      Ceramic Disc T&R
  2  C154,C325                 470PMD1    62-0003      470   pF Cap  50V  20%      Ceramic Disc T&R
  2  C155,C156                 470M25E    60-0058      470   uF Cap  25V -20/+20%  Elect
  2  C170,C171                 4700SE     60-0062      4700  uF Cap  16V -20/+20%  Elect
  2  C183,C184                 .0027J     56-0027      .0027 uF Cap  50V 5% Poly Film 272J ammo
  2  C189,C190                 100S50E2   60-1013      100   uF Cap  50V -20/+80%  Elect-AMMO
  3  C193,C278,C279            10KT       62-0163      10    uF Cap  16V  10%      Tantalum T&R
  1  C321                      240PMD1    62-0010      240   pF Cap  50V  20%      Ceramic Disc T&R
  1  C323                      .018J      56-0032      .018  uF Cap  50V 5% Poly Film 183J ammo
  1  C328                      .68J       56-0017      .68   uF Cap  50V 5% Stacked Metal Pet 684J ammo
  2  C330,C331                 470PK500D  62-0071      470   pF Cap 500V  10%      Ceramic Disc
  1  D1                        LEDR702082 70-2082      Red     Light Emitting Diode, T1 Encap, w/housing
 24  D2,D3,D4,D5,D6,D9,D10,    1N4148R    70-0004      1N4148   Diode Silicon Switching,  75 Volts PIV, RADIAL
     D11,D12,D13,D16,D17,D18,
     D23,D25,D26,D28,D40,D72,
     D76,D77,D78,D79,D81
  1  D22                       LEDY702091 70-2091      LED Yel,    T1.75 Case
  6  D24,D27,D37,D38,D39,D41   1N4001R    70-0000      1N4001   Silicon Rectifier, 1 Amp, 50 Volts PIV, RADIAL
  4  D29,D34,D35,D36           1N4005R    70-0017      1N4005   1N4005,Silicon Rectifier, RADIAL
  4  D30,D31,D32,D33           1N5402     70-0100      1N5402   Silicon Rectifier, 3Amp, 200 PIV
 21  D42,D43,D44,D45,D46,D47,  LEDG702114 70-2114      Green   Light Emitting Diode, T1 (AUTO INSERT)
     D48,D49,D50,D51,D52,D53,
 DOD Software                                                                                          Page
GSP-2112 / 2120 VGS ARTIST  MAIN BOARD        Revised:  February 12, 1998
056280AC.001                                  Revision: AC
Bill Of Materials           February 16, 1998     10:39:08
Quan Reference                 Part       SYMAN        Description
```

```
     D54,D55,D56,D57,D58,D59,
     D60,D61,D65
  3  D62,D63,D64               LEDR702113 70-2113      Red     Light Emitting Diode, T1 (AUTO INSERT)
```

Quan	Reference	Part	SYMAN	Description
1	H1	HDR321071	32-1071	5 Pin Header, 0.1" spacing, 0.025" sq pins Lockin
1	H2	HDR2	32-1069	2 Pin Header, 0.1" spacing, Cut fron 5 Pin Hdr
2	H3,H4	HDR321047	32-1047	4 Pin Header, 0.2" spacing, Locking
1	H5	HDR322000	32-2000	26 Pin Hdr, 13x2, 0.1" spacing, 0.025 pins
1	H6	HDR321083	32-1083	14 Pin Hdr, 7x2, 0.1" spacing, 0.025 pins, .375
1	H7	RC321185	32-1185	5 Pin Ribbon Cable Flex, 0.1" spacing, 2.00" Length, Open end
1	H8	PA13X2	00-0000	13X2 Pin Pad Pattern, Not a part
1	H9	PA5	00-0000	5 Pin Pad Pattern, Not a part
1	H10	RC321204	32-1204	10 Pin Ribbon Cable, 2mm spacing, 5.00" Length
1	H11	WT321164	32-1164	10 Circuit Wire Trap Connector, 2mm Pitch
1	H12	HDR323142	32-3142	6 Pin Hdr, 3X2, 0.025sq pin, 0.23" Long, 0.100" spacing
2	HS1,HS2	HS704215	70-4215	Heatsink, PCB Mount, Vert., for TO-220
1	HS3	HS704205	70-4205	Heatsink, L-Shape Base
1	HS4	HS704204	70-4204	Heatsink, 3 Regulator, Top
1	I1	INS704209	70-4209	Insulator, 3 Regulator Heatsink
1	J1	J320118	32-0118	1/4 Phone Jack, Hor. Mount, 1/2 Nose Thread Slimline
5	J2,J3,J4,J5,J8	J320119	32-0119	1/4 Phone Jack, Hor. Mount, Full Nose Thread Slimline
2	J6,J7	J320116	32-0116	JACK, Shielded 5 pin DIN, PCB mount
1	J9	J320092	32-0092	5 Pin DIN Jack
2	JP1,JP2	JP321075	32-1075	2 Pin Shunt Jumper for Header
22	L1,L2,L3,L4,L5,L6,L7,L8, L9,L10,L11,L12,L13,L34, L35,L36,L37,L38,L39,L40, L41,L42	FB260217	26-0217	Ferrite Bead, 2.5Kohms @70Mhz, SMT 0805
9	L14,L15,L16,L17,L18,L19, L30,L31,L32	FB260215	26-0215	OBSOLETE, USE RADIAL
8	L20,L21,R153,R167,R205, R206,R262,R263	200-7	50-1510	200 Ohm Resistor 5% 1/10 Watt TF, SMT 0805
8	L22,L23,L24,L25,L26,L27, L28,L29	FB260219	26-0219	Ferrite Bead, 600 ohms @100Mhz, SMT 0805
1	L44	600UH	26-0196	600 uH Inductor
2	L45,L51	FB260221	26-0221	Ferrite Bead w/axial lead
2	P1,P2	100K402011	40-2011	100 K "W" 16mm, Rot Pot x2, Rack Leads
5	P3,P4,P5,P6,P7	SW440172	44-0172	Encoder Switch,24 Pos/Dtnt,2-bit,R/A,16mm body,15mm D-shaft
1	P8	SW440170	44-0170	Encoder Switch, 32 Position, Vert, 17mm shaft
1	PA1	W360057	36-0057	3" Coax Cable
3	PA2,PA5,PA6	W360035	36-0035	8.5" Coax Cable
4	PA3,PA4,PA7,PA8	PACOAX	00-0000	NOT A PART, holes for other side of Coax Cable
1	PCB1	80-6280-A	80-6280-A	GSP2112 MAIN PCB, RAW (132.44 sq.in.)
13	Q1,Q2,Q9,Q10,Q11,Q12,Q13, Q14,Q15,Q16,Q17,Q18,Q19	2N4124	70-1009	2N4124 NPN, Gen. Purp. Amplifier/Switching Xstr T&R
5	Q4,Q5,Q7,Q8,Q26	2N5088	70-1007	2N5088 NPN, Transistor, T&R
1	Q6	2N4125	70-1008	2N4125 PNP, Gen. Purp. Amplifier/Switching Xstr
2	Q21,Q22	J112	70-1012	J112A JFET, National Only
1	QT1	QT322088	32-2088	Quick-tab, .110 x .032, PC Mount
3	R1,R4,R97	15K-7	50-1516	15 KOhm Resistor 5% 1/10 Watt TF, SMT 0805
16	R2,R40,R108,R157,R159, R174,R199,R200,R222,R229, R251,R361,R380,R382,R391, R395	51-7	50-1524	51 Ohm Resistor 5% 1/10 Watt TF, SMT 0805
16	R3,R7,R48,R201,R223,R230, R275,R276,R277,R278,R279, R281,R282,R354,R381,R383	3.3K-7	50-1525	3.3 KOhm Resistor 5% 1/10 Watt TF, SMT 0805
10	R5,R21,R55,R59,R75,R80, R124,R304,R398,R414	47K-7	50-1502	47 KOhm Resistor 5% 1/10 Watt TF, SMT 0805
32	R6,R8,R23,R34,R68,R77, R81,R94,R96,R98,R102,	1K-7	50-1505	1 KOhm Resistor 5% 1/10 Watt TF, SMT 0805

```
     R106,R107,R109,R119,R120,
     R150,R154,R163,R165,R181,
     R202,R219,R320,R402,R403,
     R404,R409,R431,R433,R435,
     R441
  4  R9,R10,R162,R176          39K-7      50-1528      39   KOhm Resistor  5%  1/10 Watt TF, SMT 0805
 71  R11,R19,R30,R31,R33,R35,  10K-7      50-1503      10   KOhm Resistor  5%  1/10 Watt TF, SMT 0805
     R41,R45,R47,R56,R61,R62,
     R65,R73,R99,R111,R113,
     R114,R123,R127,R128,R129,
     R130,R131,R132,R133,R138,
     R139,R140,R141,R155,R160,
     R161,R166,R169,R179,R193,
     R194,R208,R231,R239,R240,
     R256,R257,R258,R259,R267,
     R268,R269,R270,R271,R272,
     R273,R274,R331,R350,R351,
     R366,R367,R368,R369,R370,
     R371,R372,R373,R374,R375,
     R376,R377,R411,R428
 18  R12,R16,R24,R43,R87,R100, 100K-7     50-1504      100  KOhm Resistor  5%  1/10 Watt TF, SMT 0805
     R104,R110,R147,R152,R177,
     R180,R213,R237,R302,R305,
     R419,R423
 11  R13,R82,R92,R105,R117,    220K-7     50-1514      220  KOhm Resistor  5%  1/10 Watt TF, SMT 0805
     R225,R235,R255,R312,R337,
     R427
 18  R14,R15,R28,R37,R103,     10-7       50-1500      10    Ohm Resistor  5%  1/10 Watt TF, SMT 0805
     R115,R116,R182,R197,R198,
     R252,R253,R260,R261,R338,
     R379,R384,R388
 22  R17,R20,R25,R26,R27,R52,  20K-7      50-1507      20   KOhm Resistor  5%  1/10 Watt TF, SMT 0805
     R60,R90,R93,R144,R186,
     R216,R218,R264,R265,R321,
     R322,R323,R324,R325,R339,
     R362
 13  R18,R32,R54,R58,R84,R112, 4.7K-7     50-1509      4.7  KOhm Resistor  5%  1/10 Watt TF, SMT 0805
     R212,R215,R306,R336,R407,
     R408,R445
 32  R22,R49,R50,R51,R53,R66,  2K-7       50-1508      2    KOhm Resistor  5%  1/10 Watt TF, SMT 0805
     R67,R71,R74,R85,R91,R164,
     R184,R185,R207,R220,R301,
     R309,R326,R327,R328,R329,
     R400,R412,R415,R418,R422,
```



```
     R430,R432,R434,R436,R440
 16  R29,R36,R143,R188,R227,   1M-7       50-1506      1    MOhm Resistor  5%  1/10 Watt TF, SMT 0805
     R233,R234,R254,R307,R332,
     R333,R378,R387,R413,R417,
     R424
  2  R38,R39                   1M         50-0045      1    MOhm Resistor  5%  1/4  Watt Carbon Film
  3  R44,R95,R146              33K-7      50-1512      33   KOhm Resistor  5%  1/10 Watt TF, SMT 0805
 17  R57,R283,R284,R285,R286,  680-7      50-1511      680   Ohm Resistor  5%  1/10 Watt TF, SMT 0805
     R287,R288,R289,R290,R291,
     R292,R293,R294,R295,R296,
     R297,R298
  6  R63,R64,R209,R317,R346,   330-7      50-1517      330   Ohm Resistor  5%  1/10 Watt TF, SMT 0805
     R347
```

6	R72,R195,R196,R203,R204, R214	27K-7	50-1527	27 KOhm Resistor 5% 1/10 Watt TF, SMT 0805
11	R78,R175,R249,R299,R314, R315,R316,R318,R319,R335, R429	6.8K-7	50-1513	6.8 KOhm Resistor 5% 1/10 Watt TF, SMT 0805
19	R79,R83,R86,R88,R156, R158,R183,R187,R189,R190, R191,R192,R217,R224,R226, R303,R330,R420,R421	470K-7	50-1523	470 KOhm Resistor 5% 1/10 Watt TF, SMT 0805
3	R89,R232,R426	7.5K-7	50-1521	7.5 KOhm Resistor 5% 1/10 Watt TF, SMT 0805
5	R168,R178,R221,R236,R425	22K-7	50-1522	22 KOhm Resistor 5% 1/10 Watt TF, SMT 0805
13	R170,R171,R172,R210,R211, R250,R352,R355,R358,R364, R365,R392,R396	100-7	50-1515	100 Ohm Resistor 5% 1/10 Watt TF, SMT 0805
2	R241,R401	470-7	50-1518	470 Ohm Resistor 5% 1/10 Watt TF, SMT 0805
1	R266	10K	50-0020	10 KOhm Resistor 5% 1/4 Watt Carbon Film
4	R300,R334,R356,R416	62K-7	50-1501	62 KOhm Resistor 5% 1/10 Watt TF, SMT 0805
1	R308	75K-7	50-1520	75 KOhm Resistor 5% 1/10 Watt TF, SMT 0805
4	R389,R390,R393,R394	10.0K 1%-7	52-4500	10.0 KOhm Resistor 1% 1/10 Watt TF, SMT 0805
1	R700	12 3W	50-2250	12 Ohm Resistor 5% 3 Watt Carbon Film
1	RC1	RC321214	32-1214	26 Pin Ribbon Cable Conn, .1 spacing, 13X2
1	RCH1	RCH321221	32-1221	10 Pin Ribbon Cable, Holder, 2mm spacing
1	RCH2	RC321201	32-1201	5 Pin Ribbon Cable, 2mm spacing, 5.00" Length
2	RCH2X,RCH3X	RCH321220	32-1220	5 Pin Ribbon Cable, Holder, 2mm spacing
1	RCH3	PA5/2MM	00-0000	5 Pin Pad Pattern, Not a part, 2MM spacing
1	S5	DIP22S	70-3025	22 Pin Dip Socket, Skinny
1	S63	DIP32S	70-3017	32 Pin Dip Socket
1	SC1	SC340036	34-0036	Switch Cap, Black, Cylindrical, PHA Series
7	SC4,SC5,SC6,SC7,SC8,SC9, SC10	SC340035	34-0035	Switch Cap, Black, Round plastic, 12mm
2	SR1,SR2	SR280059	28-0059	Screw, 6-32 x 1/4", Pozi, Pan, Black
5	SR3,SR4,SR5,SR6,SR7	SR280058	28-0058	Screw, 6-32 x 3/8", Pozi, Pan, Black
2	SV1,SV2	TUBE9S	32-0250	9 Pin Tube Socket
1	SW1	SW440027	44-0027	DPDT I/O Switch (mini), PC Mount
1	SW2	SW440017	44-0017	DPDT Power Switch, 125Volt, 7 Amp
7	SW3,SW4,SW5,SW6,SW7,SW8, SW9	SW440167	44-0167	Lite Touch Switch, Right Angle
8	SW10,SW11,SW12,SW13,SW14, SW15,SW16,SW17	SW440083	44-0083	Lite Touch Switch, Mini

Quan	Reference	Part	SYMAN	Description
3	U1,U4,U36	2159	72-4262	VCA,THAT 2159 (DOD & Digitech)
3	U2,U40,U100	4053/SM	72-0087	74HC4053 Triple 2 to 1 Analog Multiplexer, SMT
6	U3,U10,U23,U39,U50,U90	NJM4560/SM	72-4233	NJM4560 Dual Op-Amp, SMT SOIC
1	U5	SSM2120A	72-4250	Dual VCA/ Dual Detector
18	U6,U7,U8,U11,U12,U14,U16, U22,U24,U28,U29,U32,U42, U58,U59,U60,U82,U83	LF353/SM	72-4032	LF353M Dual Op-Amp, SMT
4	U9,U13,U25,U41	LM1972/SM	72-4038	LM1972 2-Channel Audio Attenuator w/Mute, SMT
1	U15	4051/SM	72-0085	8 to 1 Analog Multiplexer, SMT
1	U17	CD4052DA/S	72-0079	Dual 4-CH MUX, SOIC, SMT
1	U33	TMS57070	72-3042	TMS57070 in QFP100 SPECIAL FOOTPRINT, SMT
5	U34,U71,U72,U73,U91	74HC574/SM	72-1263	Octal D-Type Edge Triggered Flip-Flops, SMT
3	U35,U92,U93	74HC244A/S	72-1111	Octal Buffer-Line Driver W/3-State Outputs, SMT
1	U37	74HC139/SM	72-5420	Dual 2 Line to 4 Line Decoder/Demultiplexer, SMT
1	U38	74HC00/SM	72-5418	Quadruple 2-Input Positive-Nand Gate, SMT
2	U43,U51	SDISC3181	72-3181	SDISCII W/I's Interface in QFP100 SPECIAL FOOTPRINT (AMI), SMT
4	U44,U45,U46,U47	256KX16-70	72-1419	DRAM, 256K x 16 70ns, SOJ, SMT
1	U61	Z8S180/S	72-4161	CPU Z8S180 Microprocessor, 20MHz, SMT

1	U62	6N138	70-2139	6N138 Opto-Isolator
1	U63	72-3142-06	72-3142-06	27C040-150, 512K X 8 CMOS Eprom V2.00 (2120 VGS ARTIST)
2	U64,U68	128KX8_SRA	72-5417	128K X 8 RAM Static, SMT
1	U65	MC34064P	70-5004	MC34064 Undervoltage Sensing Circuit
2	U66,U67	74HC138/SM	72-5419	3 Line to 8 Line Decoder/Demultiplexer, SMT
1	U69	74HC04/SM	72-1086	Hex Inverter 74HC04, SMT
3	U74,U75,U76	74HC574A/S	72-1263	Octal D-Type Edge Triggered Flip-Flops, SMT
3	U77,U78,U79	LA10502	54-0351	8 Bit R-2R Ladder, 5.00 kOhm 1% Thick Film
2	U80,U81	LM311/SM	72-5415	LM311 Analog Voltage Comparator, SMT
1	U84	7812-H	70-4013	7812 +12 Volt 1 Amp Voltage Regulator TO-220 HORIZ
1	U85	7912-H	70-4017	7912 -12 Volt 1 Amp Voltage Regulator TO-220 HORIZ
1	U86	7805-H	70-4014	7805 +5 Volt 1 Amp Voltage Regulator TO-220 HORIZ
1	U87	7805-V	70-4014	7805 +5 Volt 1 Amp Voltage Regulator TO-220 VERT
1	U88	7808-V	70-4020	7808 +8 Volt 1 Amp Voltage Regulator TO-220 VERT
1	U89	79L05	70-4127	79L05 -5 Volt 100 mA Voltage Regulator TO-92
1	U97	CS5335	72-3021	CS5335, 20 Bit Stereo, 105dB ADC, SMT
1	U98	CS4327	72-3020	CS4327, 20 Bit Stereo, 101dB DAC, SMT
2	V1,V2	12AX7A2	76-0002	12AX7A2 Tube
5	WA2,WA3,WA4,WA5,WA6	WA280187	28-0187-A	Washer, for grounding J320119
1	X1	22.579 MHZ	76-0320	20.579 MHZ Crystal, Vert
1	X2	20.00MHZ-V	76-0321	20.00 MHZ Crystal, Vert