## SCHEMATIC DIAGRAM
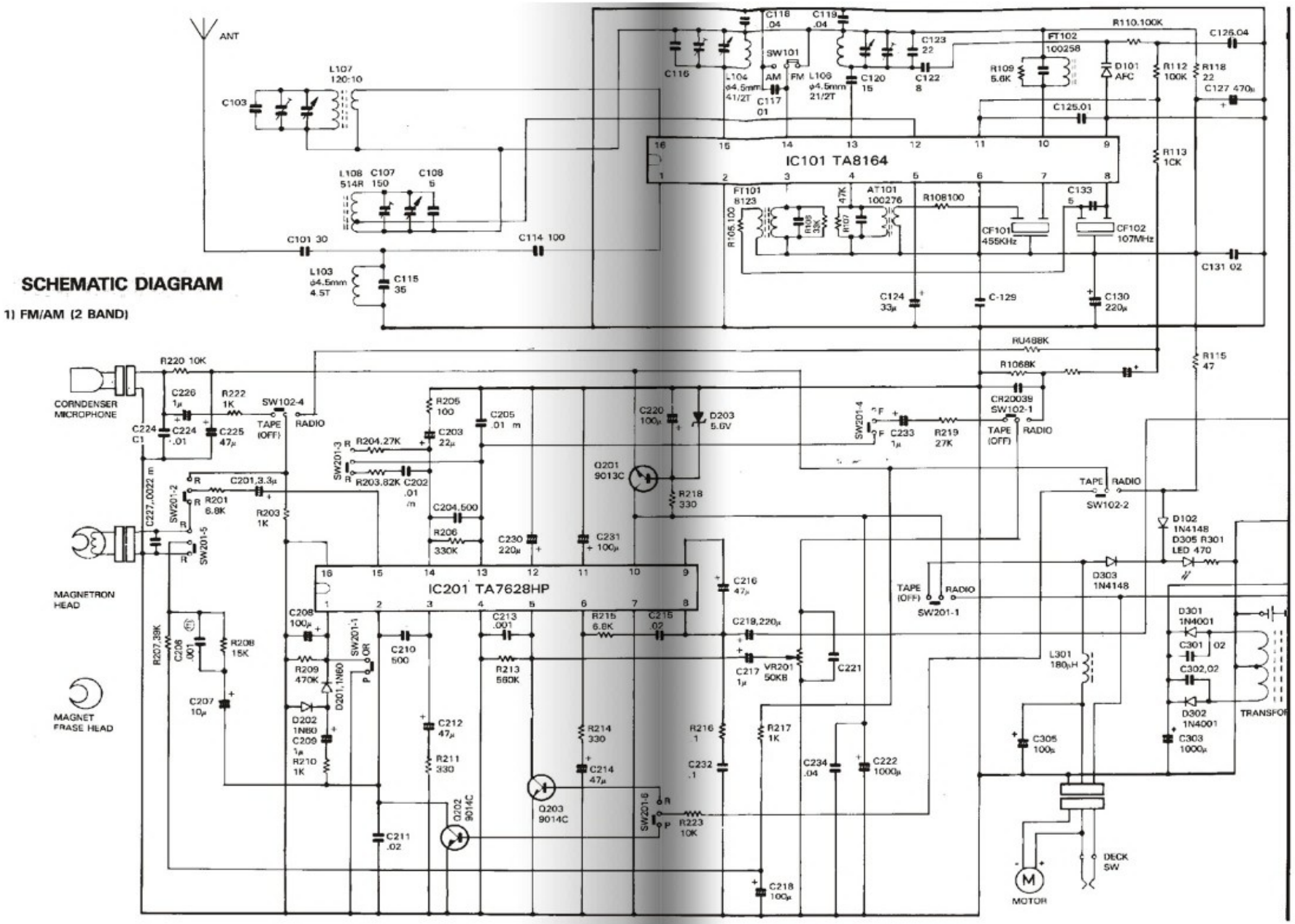
1) FM/AM (2 BAND)