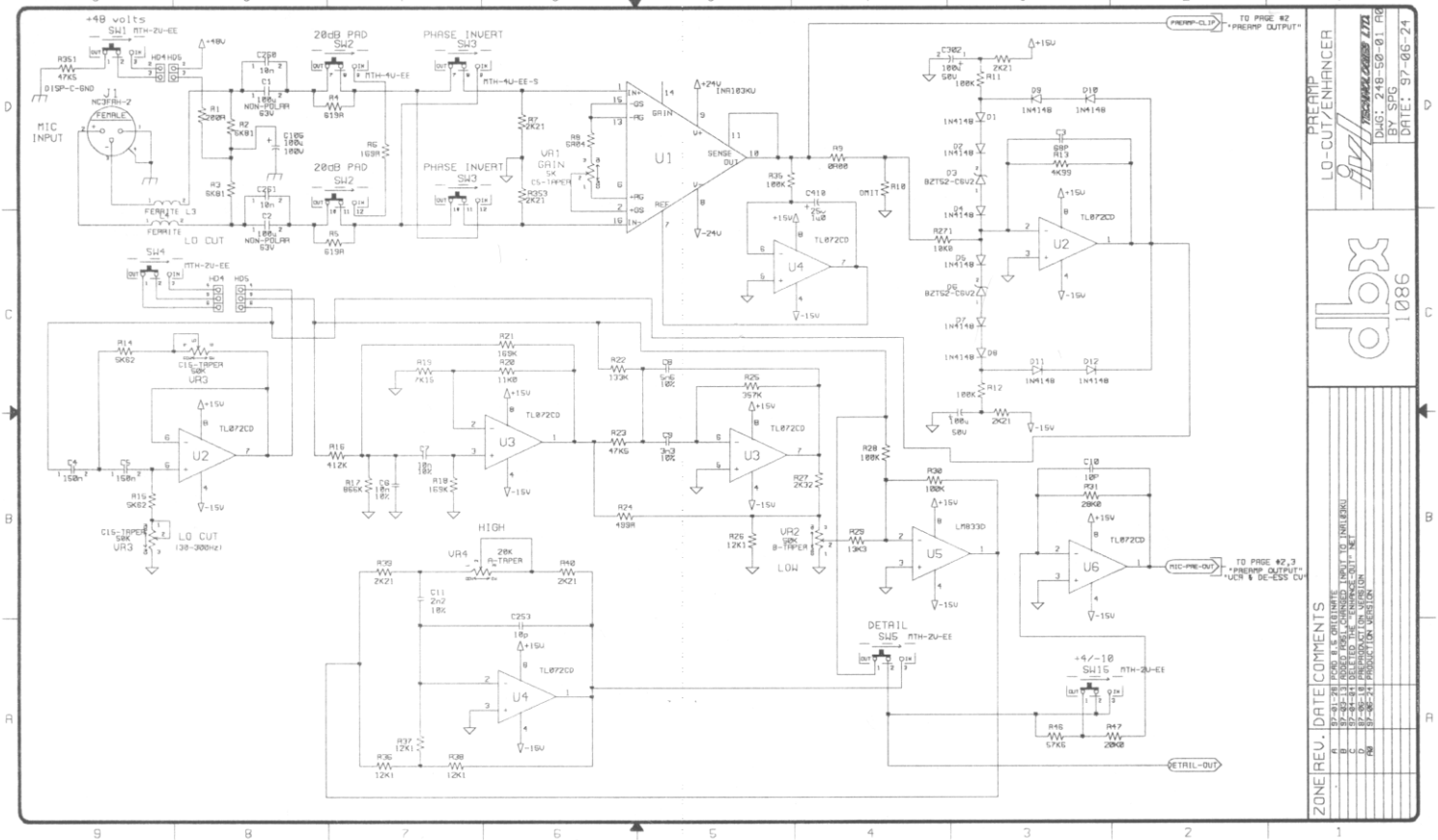

+48 volts
SW1 MTH-2U-EE
R351 47K5
DISP-C-GND
J1 NC3FAH-2
FEMALE
MIC INPUT
FERRITE L3
FERRITE
LO CUT
20dB PAD
SW2
MTH-4U-EE
PHASE INVERT
SW3
MTH-4U-EE-S
VR1 GAIN 5K C5-TAPER
U1
INA103KU
GAIN
SENSE OUT
REF
+24V
-24V
R9 0R00
R10
OMIT
C410 25u 1u0
U4
TL072CD
SW4
MTH-2U-EE
R14 5K62
C15-TAPER 50K
VR3
U2
C4 150n
C5 150n
R15 5K62
C15-TAPER 50K
VR3
LO CUT (30-300Hz)
R16 412K
R17 866K
C6 10n 10%
R18 169K
C7 10n 10%
R19 7K15
R20 11K0
R21 169K
U3
R22 133K
C8 5n6 10%
R23 47K5
C9 3n3 10%
R24 499R
R25 357K
R26 12K1
VR2 50K B-TAPER
LOW
R27 2K32
HIGH
VR4 20K A-TAPER
R39 2K21
R40 2K21
C11 2n2 10%
C253 10p
U4
R37 12K1
R36 12K1
R38 12K1
R28 100K
R29 13K3
R30 100K
U5
LM833D
DETAIL
SW5 MTH-2U-EE
C10 10P
R31 20K0
U6
MIC-PRE-OUT
TO PAGE #2,3 "PREAMP OUTPUT" "VCA & DE-ESS CV"
+4/-10
SW16 MTH-2U-EE
R46 57K6
R47 20K0
DETAIL-OUT
PREAMP-CLIP
TO PAGE #2 "PREAMP OUTPUT"
C302 100u 50V
R11 100K
2K21
D9 1N4148
D10 1N4148
D1 1N4148
D2 1N4148
D3 BZT52-C6V2
D4 1N4148
D5 1N4148
D6 BZT52-C6V2
D7 1N4148
D8 1N4148
R271 10K0
C3 68P
R13 4K99
U2
D11 1N4148
D12 1N4148
R12 100K
100u 50V
2K21
-15V
PREAMP
LO-CUT/ENHANCER
TECHNOLOGIES LTD
DWG: 248-50-01 A0
BY SPG
DATE: 97-06-24
dbx
1086
ZONE REV. DATE COMMENTS
A 97-01-28 RCAD 8.5 ORIGINATE
B 97-03-13 ADDED RESI.CHANGED INPUT TO INA103KU
C 97-04-01 DELETED THE "ENHANCE-OUT" NET
D 97-06-10 PREPRODUCTION VERSION
A0 97-06-24 PRODUCTION VERSION

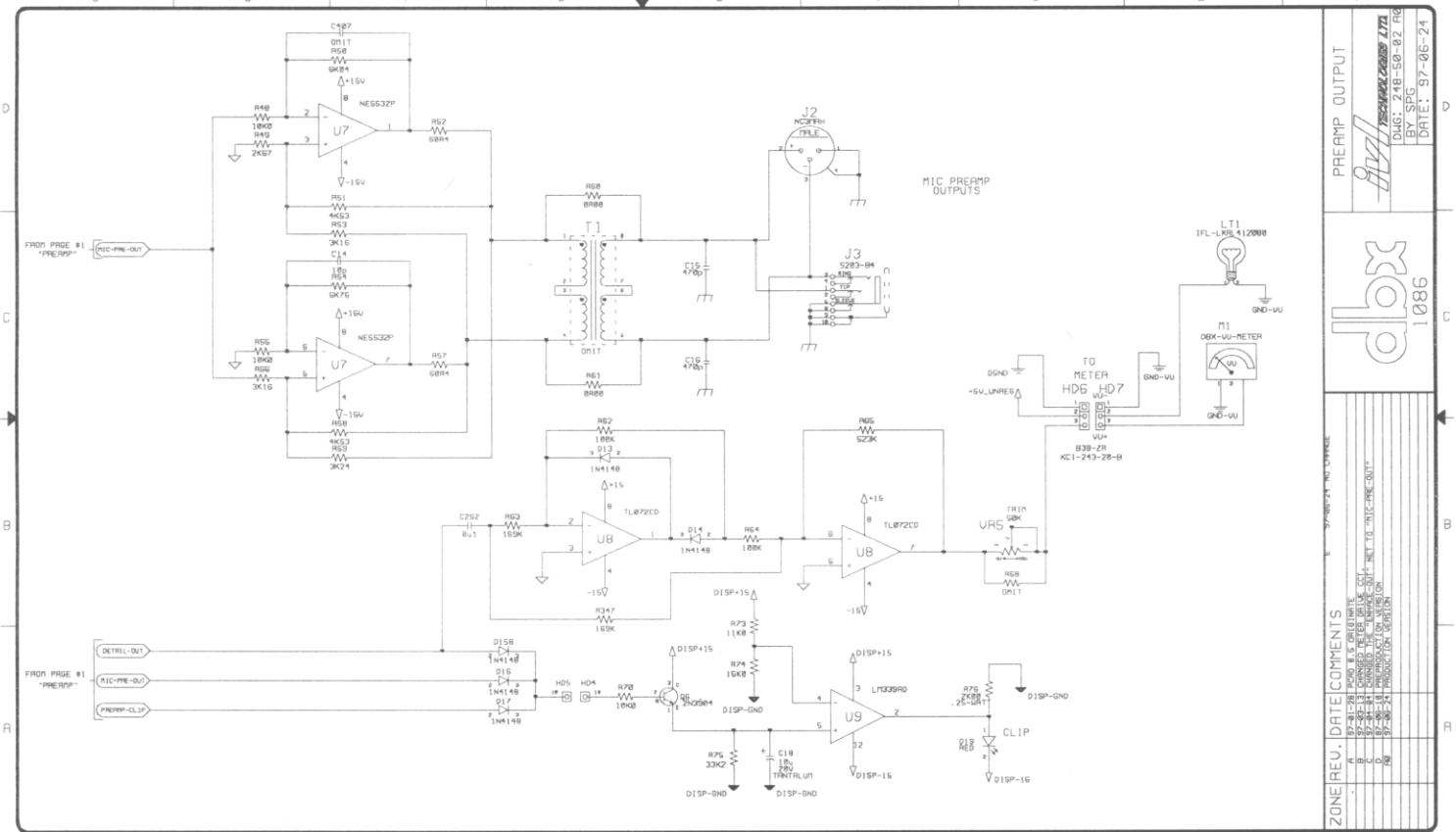

PREAMP OUTPUT
DWG: 248-50-02 A0
BY SPG
DATE: 97-06-24
dbx
1086
MIC PREAMP OUTPUTS
FROM PAGE #1 "PREAMP"
MIC-PRE-OUT
DETRIL-OUT
PREAMP-CLIP
NE5532P
U7
U8
U9
TL072CD
LM339AD
T1
J2
J3
S203-B4
LT1
IFL-LXRL412000
M1
DBX-VU-METER
TO METER
HD6 HD7
B3B-ZR
KC1-243-20-B
VR5
TRIM 50K
CLIP
DISP+15
DISP-GND
DISP-16
GND-VU
ZONE
REV.
DATE
COMMENTS
A 97-01-28 PCAD 8.5 ORIGINATE
B 97-03-13 CHANGED METER DRIVE CCT.
C 97-04-04 CHANGED THE "LINKAGE-OUT" NET TO "MIC-PRE-OUT"
D 97-06-18 PREPRODUCTION VERSION
A0 97-06-24 PRODUCTION VERSION

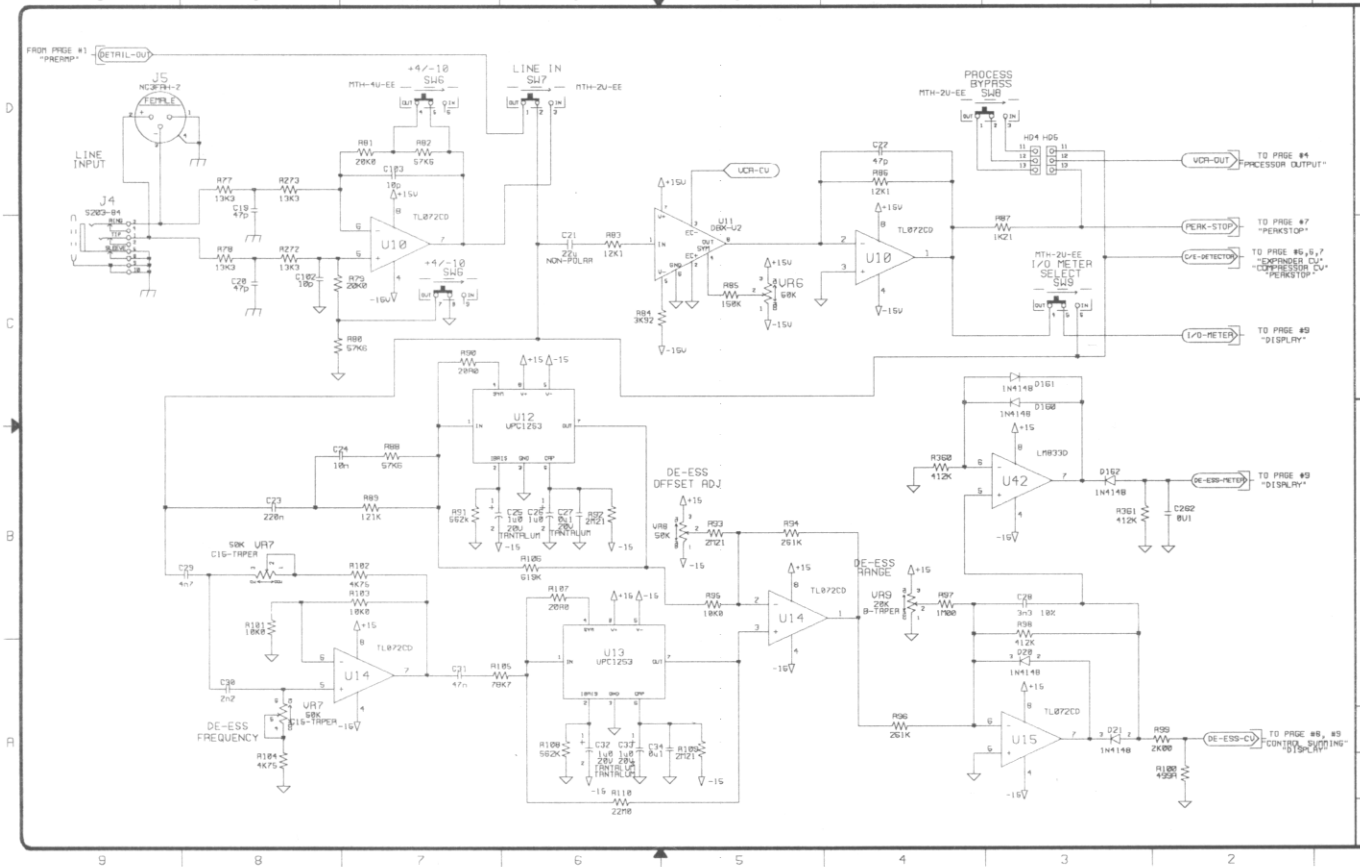

VCA & DE-ESS CV

TECHNICAL CABLES LTD.

DWG: 248-50-03 A0

BY SPG

DATE: 97-06-24

dbx 1086

ZONE	REV.	DATE	COMMENTS
	A	97-01-28	PCAD 6.5 ORIGINATE
	B	97-03-13	SWAPPED PINS ON VR7
	C	97-04-04	NO CHANGE
	D	97-06-10	PREPRODUCTION VERSION
	A0	97-06-24	SWAP PINS 2,3 ON U11 PRODUCTION VERSION

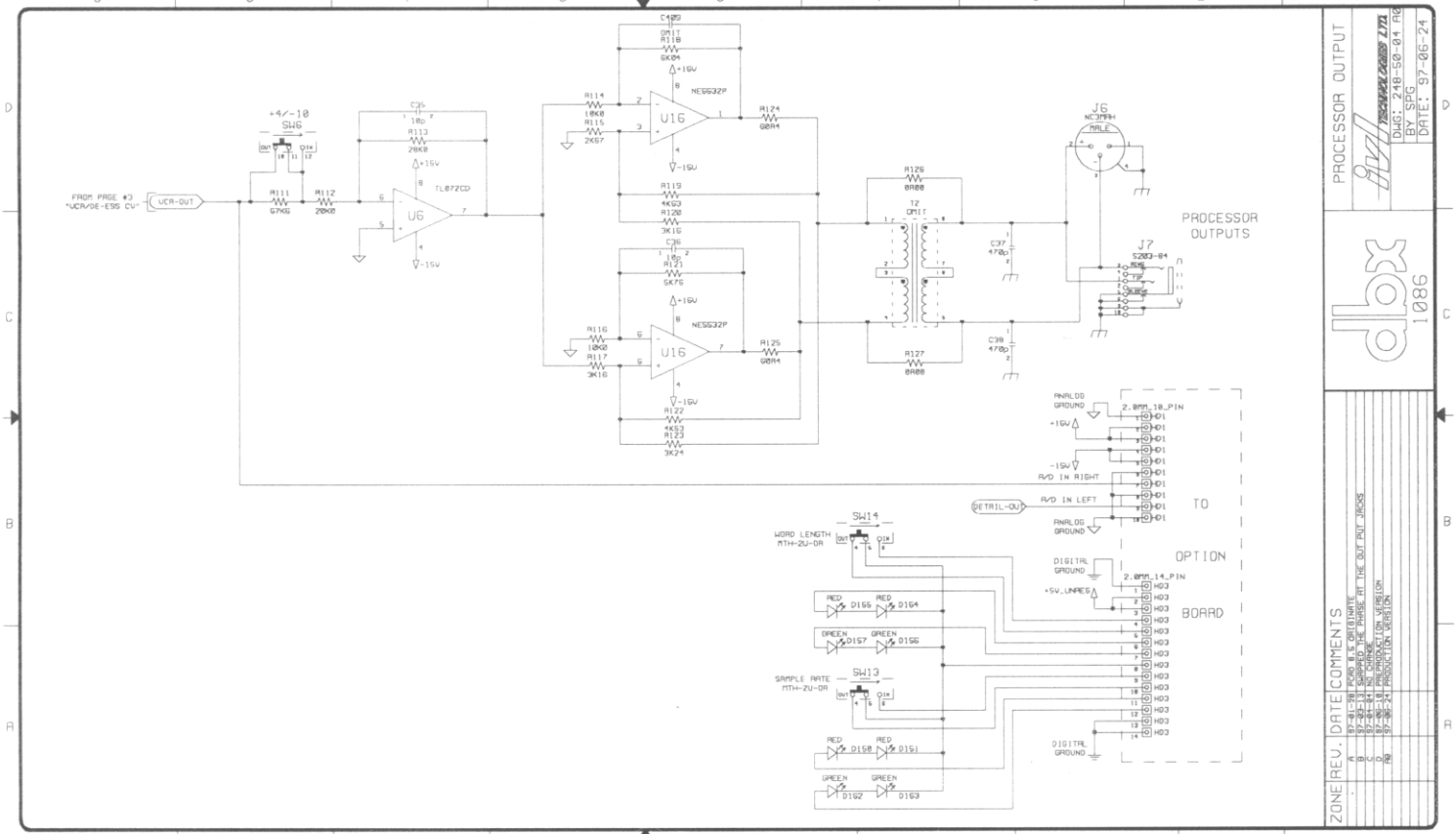
PROCESSOR OUTPUT
DWG: 248-50-04 R0
BY SPG
DATE: 97-06-24
1086
PROCESSOR OUTPUTS
TO OPTION BOARD
FROM PAGE #3 "VCA/DE-ESS CV"
VCA-OUT
+4/-10
SW6
R111 57K6
R112 20K0
C35 10p
R113 28K0
U6
TL072CD
C409 OMIT
R118 6K04
U16
NE5532P
R114 10K0
R115 2K67
R124 60A4
R119 4K53
R120 3K16
C36 10p
R121 5K76
R116 10K0
R117 3K16
R125 60A4
R122 4K53
R123 3K24
R126 0R00
T2 OMIT
R127 0R00
C37 470p
C38 470p
J6 NC3MAH MALE
J7 S203-84
ANALOG GROUND
2.0MM_10_PIN
A/D IN RIGHT
A/D IN LEFT
DETAIL-OUT
DIGITAL GROUND
2.0MM_14_PIN
+5V_UNREG
SW14
WORD LENGTH MTH-2U-OR
SW13
SAMPLE RATE MTH-2U-OR
RED D155 D164
GREEN D157 D156
RED D158 D151
GREEN D162 D163
ZONE REV. DATE COMMENTS
A 97-01-28 PCAD 8.5 ORIGINATE
B 97-02-13 SWAPPED THE PHASE AT THE OUT PUT JACKS
C 97-04-04 NO CHANGE
D 97-06-10 PREPRODUCTION VERSION
R0 97-06-24 PRODUCTION VERSION

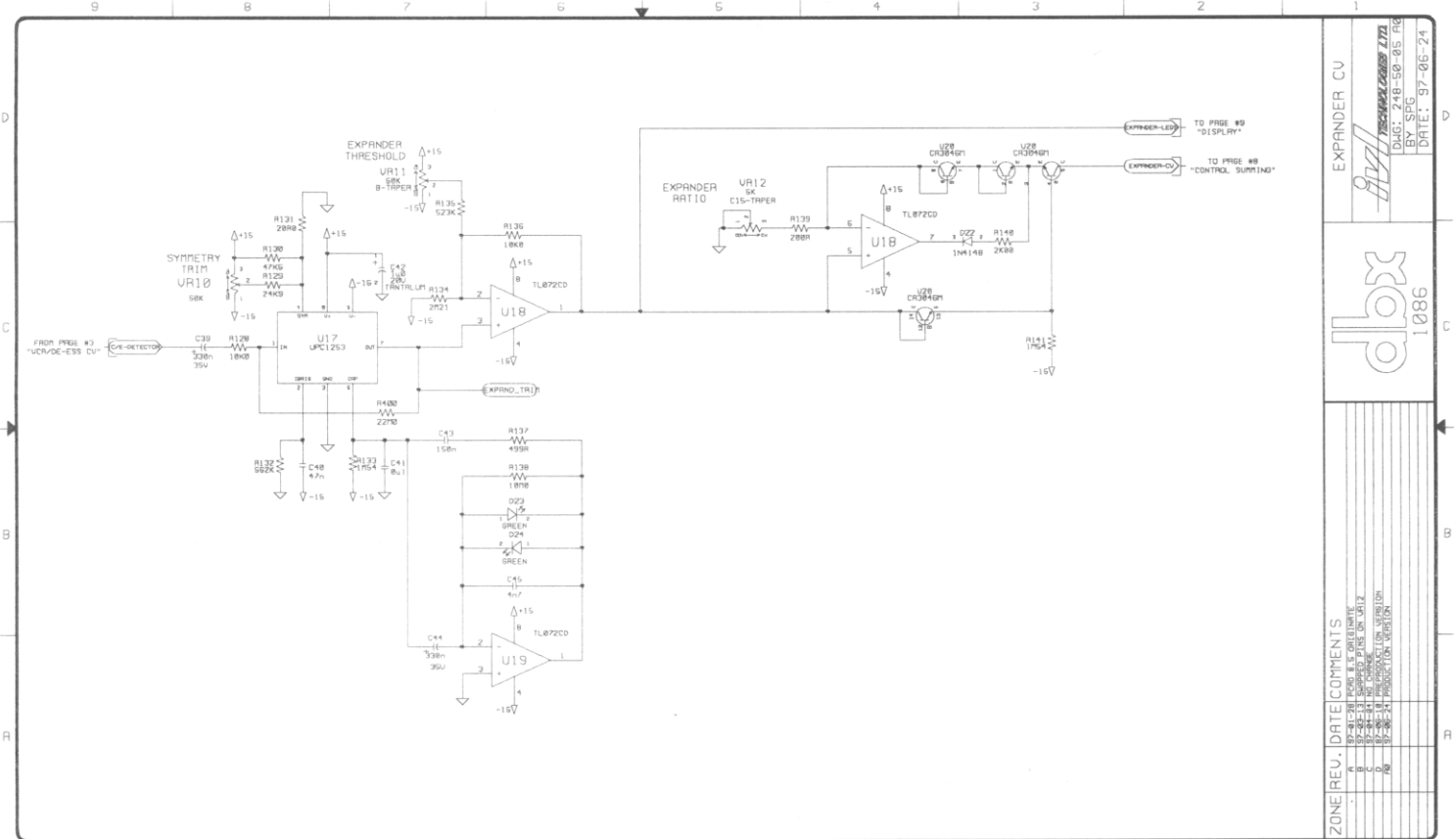
EXPANDER THRESHOLD
VR11
50K
B-TAPER
R135
523K
R131
20R0
R130
47K6
R129
24K9
SYMMETRY TRIM
VR10
50K
C42
1u0
20V
TANTALUM
R134
2M21
R136
10K0
U18
TL072CD
U17
UPC1253
FROM PAGE #3
"VCA/DE-ESS CV"
C/E-DETECTOR
C39
330n
35V
R120
10K0
EXPAND_TRIM
R400
22M0
C43
150n
R137
499R
R138
10M0
R132
562K
C40
47n
R133
1M54
C41
0u1
D23
GREEN
D24
GREEN
C45
4n7
C44
330n
35V
U19
TL072CD
EXPANDER RATIO
VR12
5K
C15-TAPER
R139
200R
U18
TL072CD
D22
1N4148
R140
2K00
U20
CR3046M
U20
CR3046M
U20
CR3046M
R141
1M54
EXPANDER-LED
TO PAGE #9
"DISPLAY"
EXPANDER-CV
TO PAGE #8
"CONTROL SUMMING"
EXPANDER CV
TECHNOLOGIES LTD
DWG: 248-50-05 A0
BY: SPG
DATE: 97-06-24
dbx
1086
ZONE
REV.
DATE
COMMENTS
A 97-01-28 PCAD 8.5 ORIGINATE
B 97-03-13 SWAPPED PINS ON VR12
C 97-04-04 NO CHANGE
D 97-06-10 PREPRODUCTION VERSION
A0 97-06-24 PRODUCTION VERSION

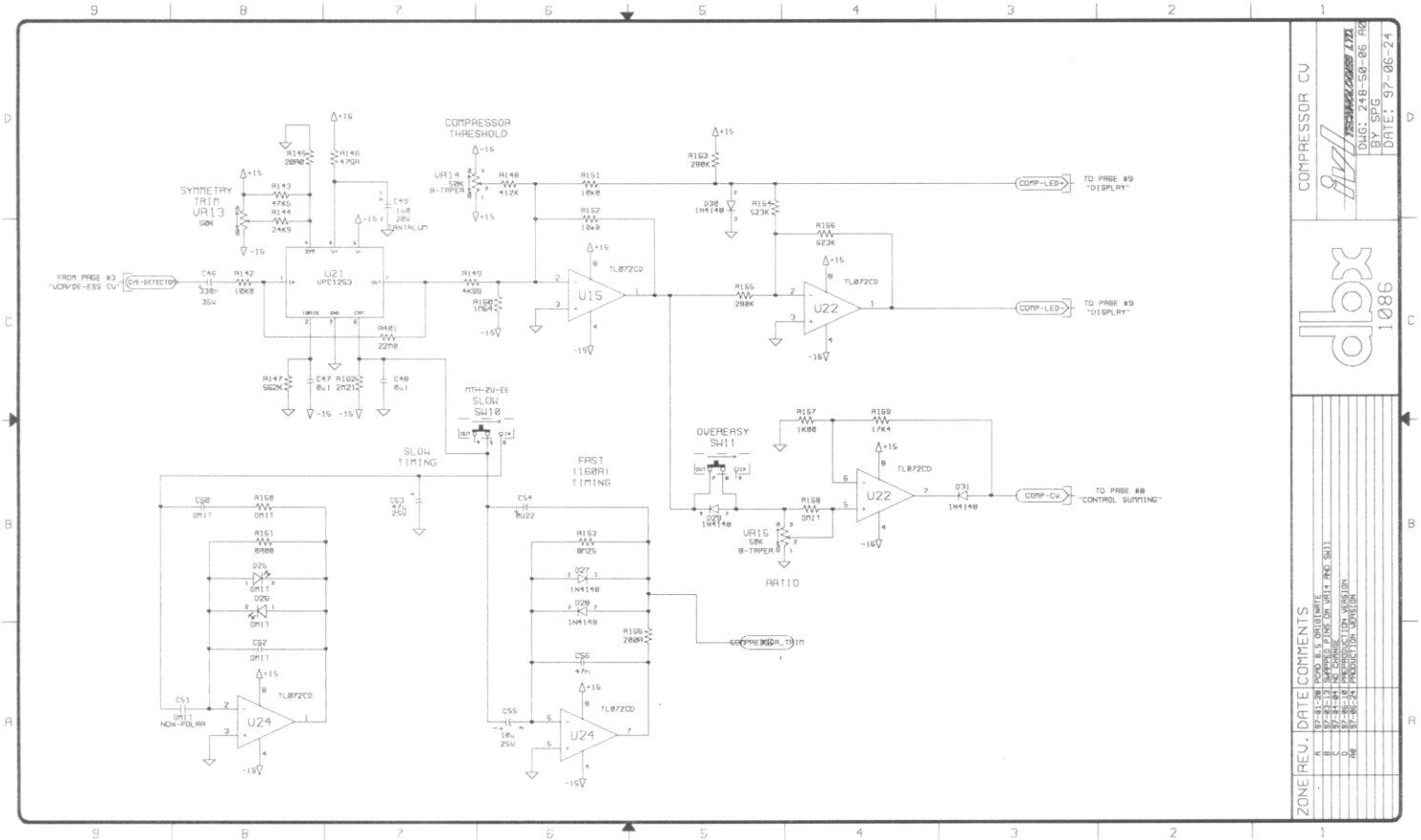
COMPRESSOR CV
TECHNOLOGIES LTD.
DWG: 248-50-06 A0
BY SPG
DATE: 97-06-24
dbx
1086
COMPRESSOR THRESHOLD
SYMMETRY TRIM
VR13
50K
FROM PAGE #3 "VCA/DE-ESS CV"
CV-DETECTOR
U21
UPC1253
U15
U22
U24
TL072CD
TO PAGE #9 "DISPLAY"
COMP-LED+
COMP-LED-
MTH-ZU-EE
SLOW SW10
SLOW TIMING
FAST (160A) TIMING
OVEREASY SW11
RATIO
COMP-CV
TO PAGE #8 "CONTROL SUMMING"
COMPRESSOR_TRIM
NON-POLAR
ZONE
REV.
DATE
COMMENTS
A 97-01-28 PCAD 8.5 ORIGINATE
B 97-03-13 SWAPPED PINS ON VR14 AND SW11
C 97-04-04 NO CHANGE
D 97-05-10 PREPRODUCTION VERSION
A0 97-06-24 PRODUCTION VERSION

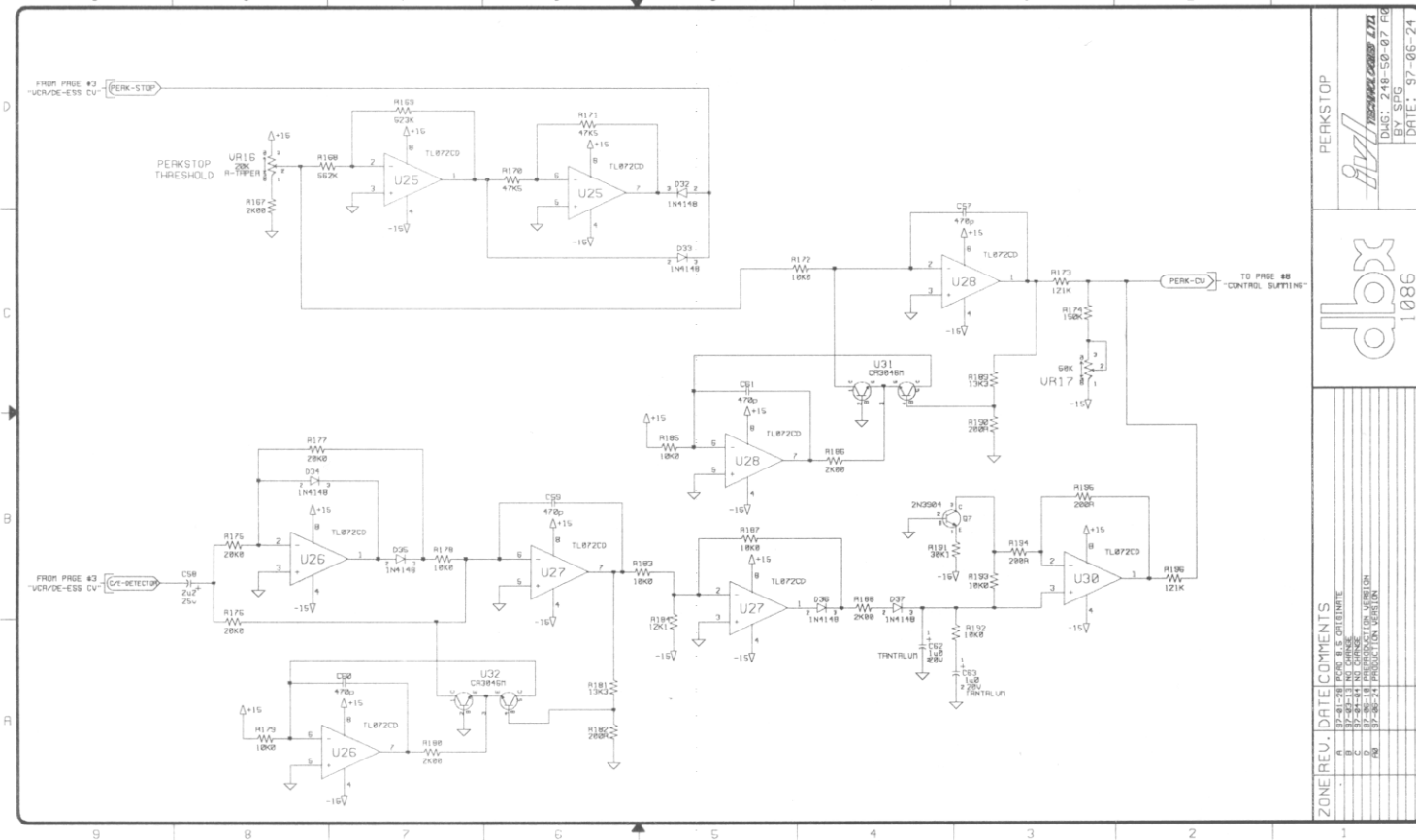

PERKSTOP

TECHNOLOGIES LTD.

DWG: 248-50-07 A0
BY SPG
DATE: 97-06-24

dbx 1086

ZONE	REV.	DATE	COMMENTS
	A	97-01-28	PCAD 8.5 ORIGINATE
	B	97-03-13	NO CHANGE
	C	97-04-04	NO CHANGE
	D	97-06-18	PRODUCTION VERSION
	A0	97-06-24	PRODUCTION VERSION

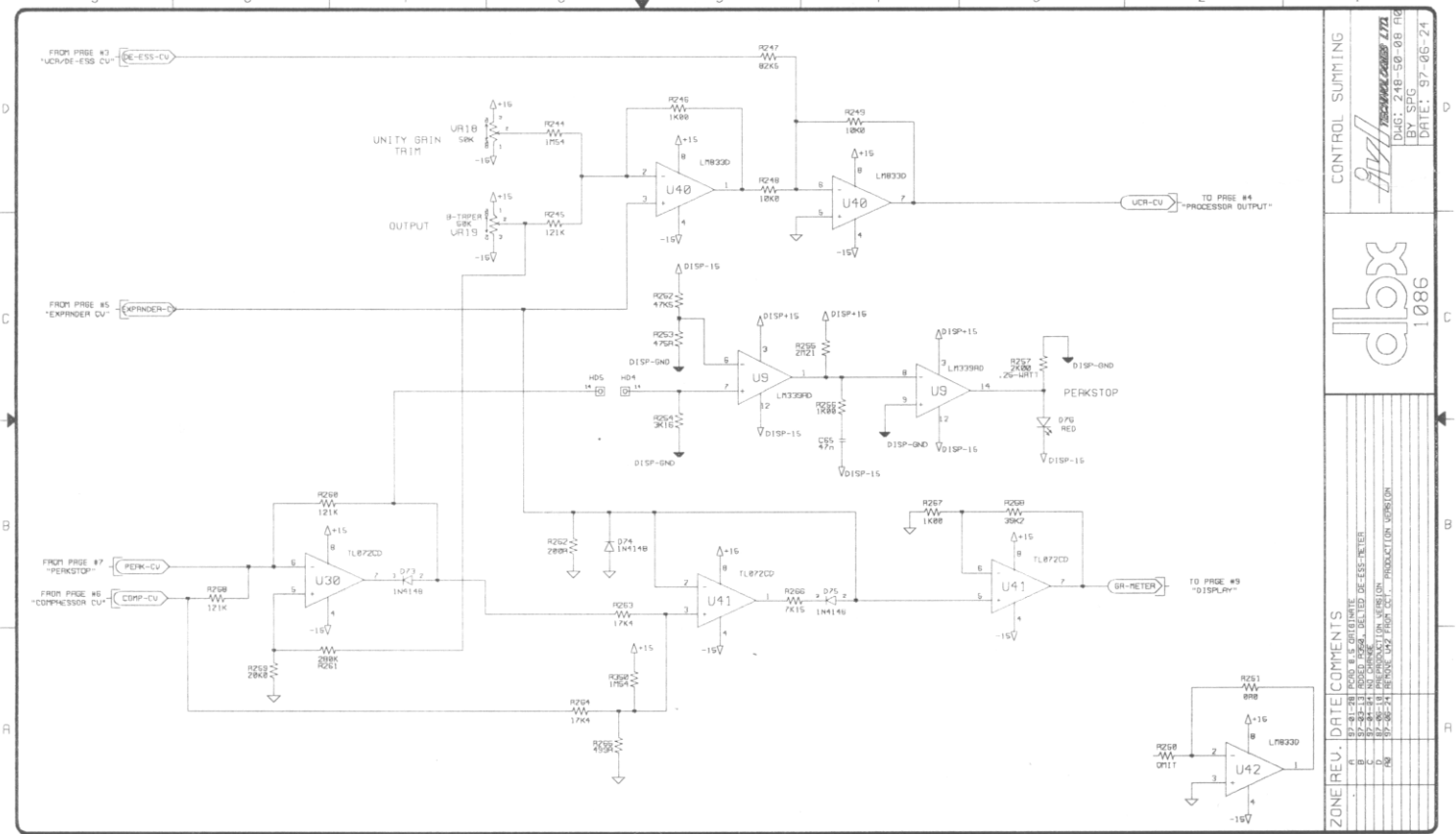
FROM PAGE #3 "VCA/DE-ESS CV"
DE-ESS-CV
R247 82K5
UNITY GAIN TRIM
VR18 50K
R244 1M54
R246 1K00
U40
LM833D
R249 10K0
R248 10K0
OUTPUT
B-TAPER 50K VR19
R245 121K
VCA-CV
TO PAGE #4 "PROCESSOR OUTPUT"
FROM PAGE #5 "EXPANDER CV"
EXPANDER-CV
R262 47K5
R253 475R
DISP-GND
HD5
HD4
U9
LM339AD
R256 2M21
R255 1K00
C65 47n
R254 3K16
R257 2K00 .25-WATT
PEAKSTOP
D76 RED
DISP-15
R260 121K
FROM PAGE #7 "PEAK-CV"
PEAK-CV
FROM PAGE #6 "COMPRESSOR CV"
COMP-CV
R268 121K
U30
TL072CD
D73 1N4148
R259 20K0
R261 288K
R262 200R
D74 1N4148
R263 17K4
U41
R266 7K15
D75 1N4148
R267 1K00
R268 39K2
GR-METER
TO PAGE #9 "DISPLAY"
R264 17K4
R265 499R
R251 0R0
R250 OMIT
U42
CONTROL SUMMING
TECHNOLOGIES LTD
DWG: 248-50-08 A0
BY SPG
DATE: 97-06-24
dbx
1086
ZONE
REV.
DATE
COMMENTS
A 97-01-28 PCAD 8.5 ORIGINATE
B 97-03-13 ADDED R268, DELTED DE-ESS-METER
C 97-04-04 NO CHANGE
D 97-05-10 PREPRODUCTION VERSION
A0 97-06-24 REMOVE U42 FROM CCT. PRODUCTION VERSION

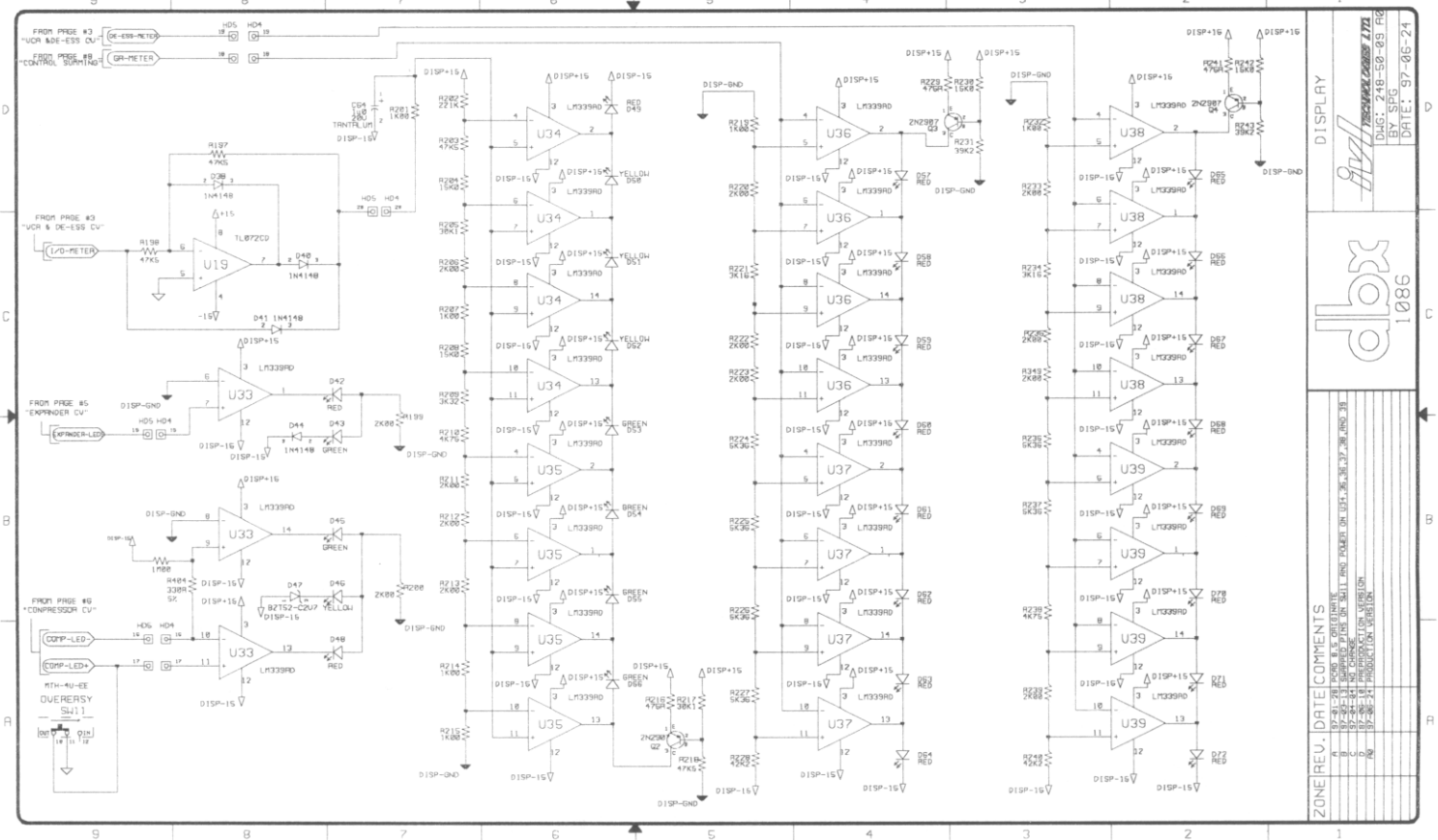

DISPLAY

TECHNICAL AUDIO LTD

DWG: 248-50-03 A0

BY: SPS

DATE: 97-06-24

dbx 1086

ZONE	REV.	DATE	COMMENTS
	A	97-01-28	PCB# 8.5 ORIGINATE
	B	97-03-13	SWAPPED PINS ON SW11 AND POWER ON U34,35,36,37,38,AND 39
	C	97-04-04	NO CHANGE
	D	97-05-10	PREPRODUCTION VERSION
	A0	97-06-24	PRODUCTION VERSION

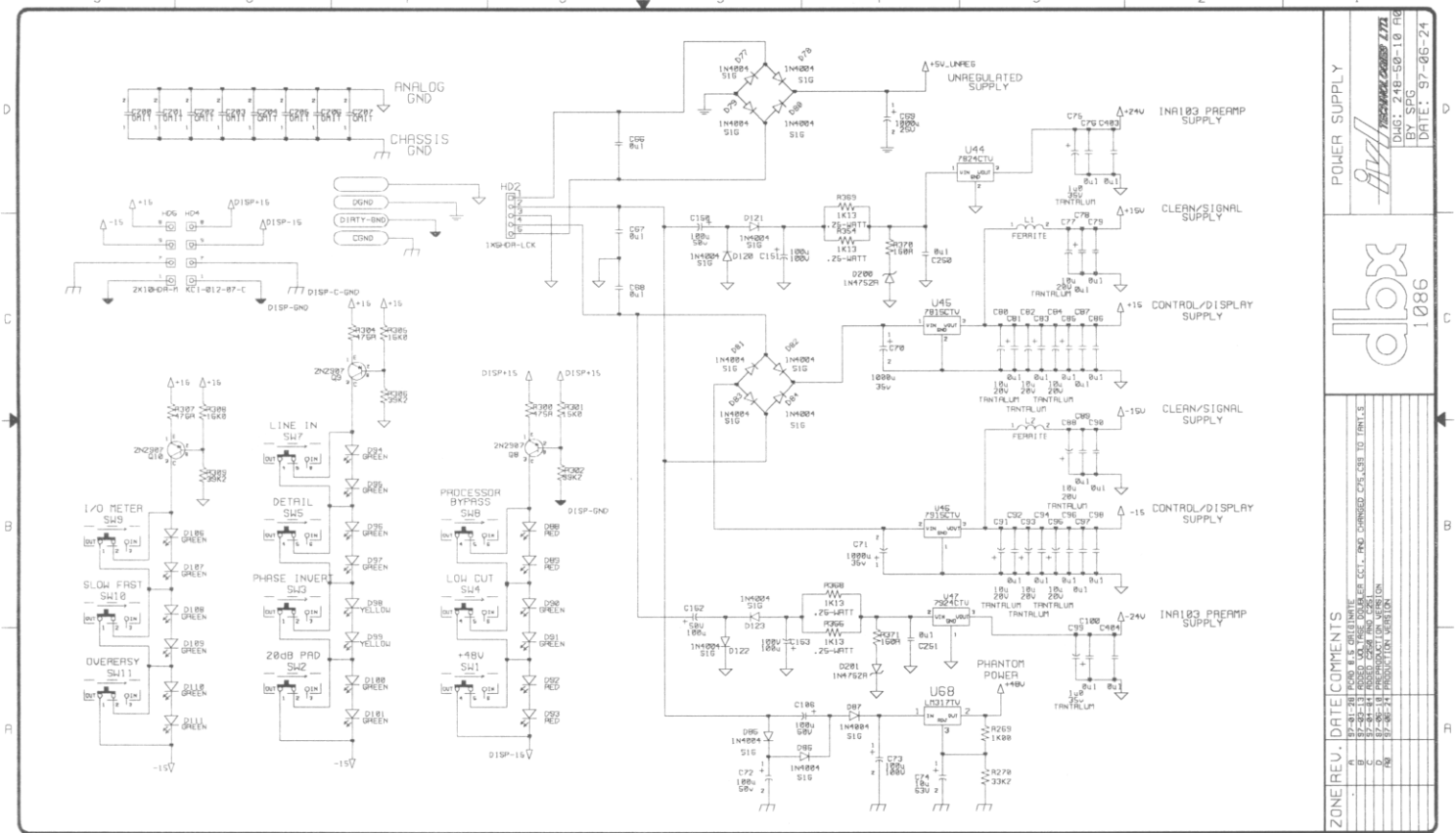

ANALOG GND
CHASSIS GND
DGND
DIRTY-GND
CGND
HD2
1X5HDR-LCK
2X10HDR-M
KC1-012-07-C
DISP-GND
DISP-C-GND
DISP+15
DISP-15
+5V_UNREG
UNREGULATED SUPPLY
INA103 PREAMP SUPPLY
CLEAN/SIGNAL SUPPLY
CONTROL/DISPLAY SUPPLY
CLEAN/SIGNAL SUPPLY
CONTROL/DISPLAY SUPPLY
INA103 PREAMP SUPPLY
PHANTOM POWER
+48V
U44
7824CTV
U45
7815CTV
U46
7915CTV
U47
7924CTV
U68
LM317TV
LINE IN SW7
DETAIL SW5
PHASE INVERT SW3
20dB PAD SW2
PROCESSOR BYPASS SW8
LOW CUT SW4
+48V SW1
I/O METER SW9
SLOW FAST SW10
OVERERSY SW11
POWER SUPPLY
DWG: 248-50-10 A0
BY SPG
DATE: 97-06-24
1086
ZONE
REV.
DATE
COMMENTS
A 97-01-28 ROAD 8.5 ORIGINATE
B 97-03-13 ROAD VOLTAGE DOUBLER CCT. AND CHANGED C75,C99 TO TANT.S
C 97-04-04 ROAD C250 AND C251
D 97-06-18 PREPRODUCTION VERSION
A0 97-06-24 PRODUCTION VERSION