TECH FILE

Preliminary Technical Service Manual

$350 - 600
BASED ON CONDITIO

MODEL 160/161/162

USED DISCRETE VCAS

Compressor/Limiters

dbx Professional Products
May 1, 1991

dbx®

User/Operator Description

Test Procedures

INITIAL FACTORY TEST & ALIGNMENT PROCEDURE

DBX MODELS 160 AND 161

WITHOUT R47 & R39 (LATE 160 & 161)

TEST EQUIPMENT REQUIRED:

QUANTITY	ITEM	TYPE OR EQUIVALENT
1	Signal Oscillator	Kron-Hite 4200, Heath 1272
1	Digital Multimeter	Dana 3300, B & K 282, Digitec 2110
1	Oscilloscope	Any (covering audio band)
1	Wide Range db meter	DBX SK-C-1026, HP 427
1	Harmonic distortion meter	DBX SK-B-1070, Heath 1M58, HP330, GR1500, GR1900
1	± 3 db meter (cal ref. 1 volt) (optional)	DBX SKC-1071
1	Resistor Substitution Box	Any. ½ W 5% values, typically 10K to 470K

NOTE: On model 160, tie " - " terminals to Gnd, for normal testing.

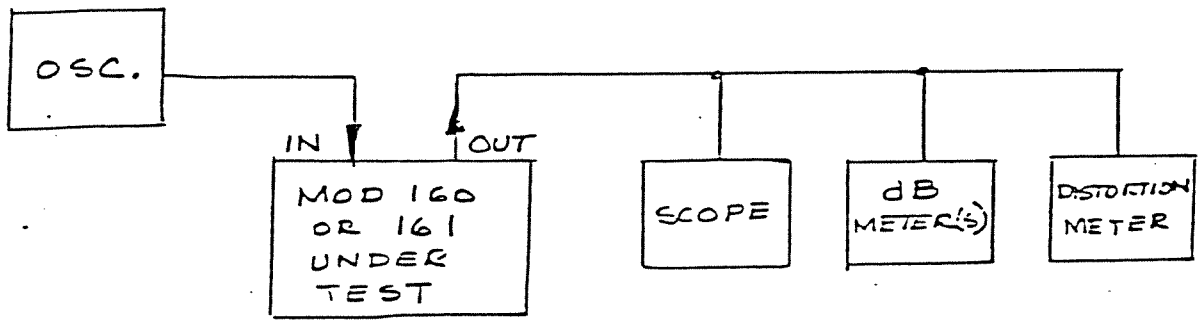

Revised 4-20-77
350025-03

160/161 INITIAL PROCEDURE

Before applying power to unit, check mechanical zero of meter.

1) Supply Trim: Put resistance substitution box across R14 and measure DC voltage at (+) side of C7. Turn sub box until voltage is +15 volts ± 50 MV (+14.950 to + 15.050). Solder appropriate resistor in place. Check (-) side of C8 to verify that it is -15 volts ± 200 MV (-14.800 to -15.200)

2) RMS Trim: (205) Connect sub box across the two RMS trim pins, and measure the offset at the input pin of the RMS module. Trim the sub box until voltage is zero ± 15 MV, and solder appropriate resistor in place.

2A) (209) With input of 1.228 VRMS at 100 Hz, place sub box between + v and the trim pin on the RMS module. Drop input level to - 60 db and adjust sub box until a symmetrical waveform is observed on comp pin, insert value chosen in R36 spot (typ 8K to 75KR)

3) VCA & RMS Symmetry:
Set oscillator to 1.228 VRMS
   a) 100 Hz (Tune for peak on distortion meter) Set front panel compression knob to "3" and output gain to +20. Turn threshold control counter clockwise from "3v" until external db meter reads "0" db. Turn trim pots R27 and R34 until distortion reads minimum.

4) Level Calibration:
Set oscillator to 1.228 VRMS
   a) 100Hz turn R63 until the voltage at the end of R79 (closest to the center of unit) is -.011 VDC

5) Threshold Calibration:
Turn front panel "Threshold Control" until both led's are off. Loosen knob and position so that pointer indicates just past "1V" and retighten. (When both leds are off the input signal is at threshold level.) (See fig. 1.) Step the oscillator up and down in 10 db steps verifying that the threshold level matches the input signal at successive calibration marks on the threshold dial.

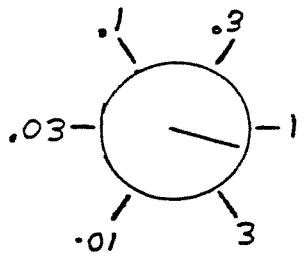

FIGURE 1

dBx Model

163 TEST PROCEDURES

Before and After Burn-In

Rev. 2

H. Gardiner

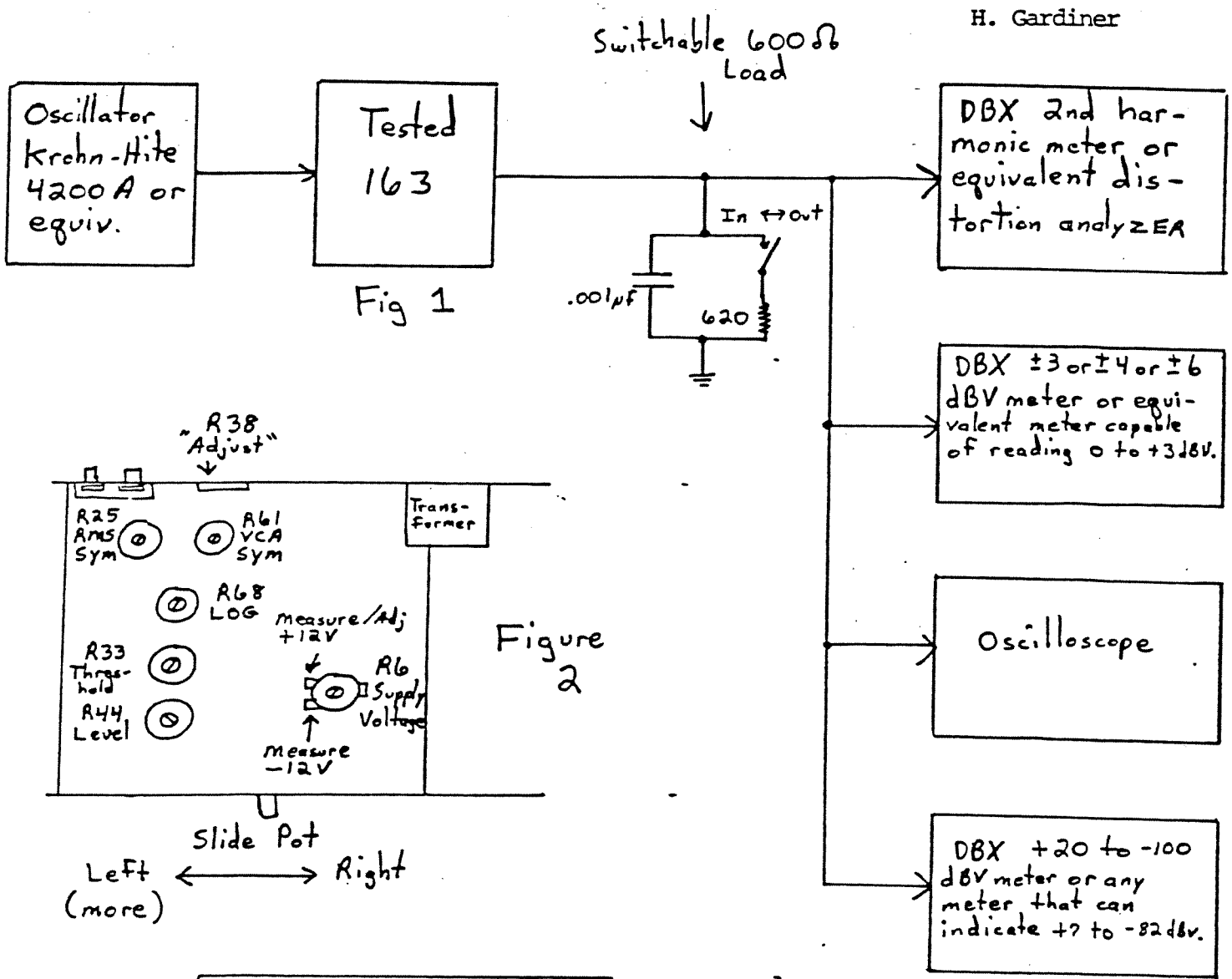

Fig 1

Figure 2

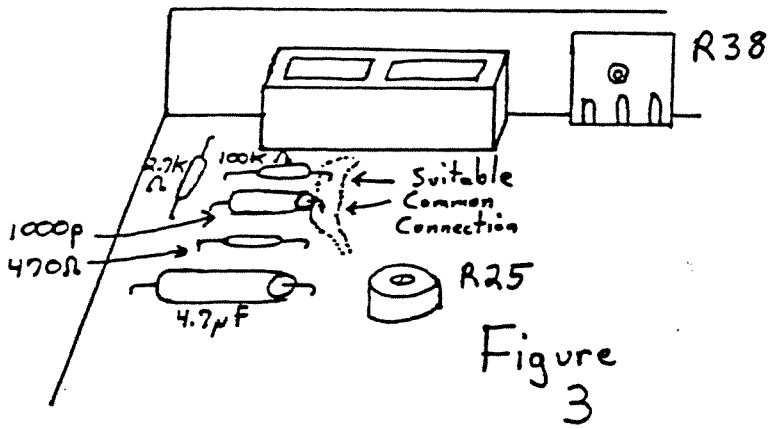

Figure 3

350109

In addition to equipment shown on first page, use a known good 163 as a visual reference for repair purposes.

Switchable load can be built on banana plug such as Pomona MDP.

Test Phase Prior to Burn-In

Preparation

a) Connect equipment as shown in Figure 1.
b) Adjust oscillator for 1 kHz and 1.26 VRMS (+2 dBv) using a voltmeter.
c) Determine frequency response errors of dB meters at 20 Hz, 200 Hz and 20kHz using 2 kHz as reference. If the meters read low at a particular frequency expect them to read low by the same amount when fed through a flatly responding 163.

1) 163 Preparation
Set R25 (RMS Sym), R61 (VCA Sym), and R68 (Log) to midrange.

2) Supply Voltage
a) Adjust R6 (Supply Voltage) for +12 +/- .1 VDC at point indicated in Figure 2. Common lead of voltmeter can be connected to point shown in Figure 3.
b) Measure for -12 +/- .4 VDC at point shown in Figure 2.

3) Distortion
a) Set oscillator to 100 Hz and +2 dBv.
b) Set rear panel switch to +4.
c) Switch out 600 ohm load.
d) Set sliding pot to right (less). See Figure 2.
e) Adjust R33 (Threshold) so that the -6 dB lamp just lights.
f) Set R44 (Level) for +2 dBv out.
g) Set sliding pot to left.
h) Alternate between R61 (VCA Sym) and R25 (RMS Sym) as you adjust for minimum distortion. Two passes is usually enough.
i) Reduce oscillator output by about 20 dB.
j) Adjust R68 (Log) for minimum distortion.
k) Set oscillator to +2 dBv.
l) Adjust R61 (VCA Sym) for distortion less than .056%.

4) DC Tracking
a) Set oscillator to 2 kHz and +2 dBv.
b) Switch in 600 ohm load.
c) Set sliding pot to right.
d) Adjust R33 (Threshold) so that -6 dB light just comes on.
e) Adjust R44 (Level) for +2 dBv out.
f) Set sliding pot to left. Observe that leds all light.
g) Suddenly reduce oscillator output to below -50 dBv. Observe that leds extinguish at a uniform rate.
h) Set oscillator to +2 dBv.
i) Reduce oscillator output by 40 dB. The -4 dB lamp must be on and the -8 dB lamp must be off.

5) Rear Panel Switch
a) Set oscillator to +2 dBv.
b) Set sliding pot somewhere in mid-range. Observe output level.
c) Check that output does not change by more than 1 dB when the sliding pot is moved to either extreme from the center position.

350109

dBx Model 163 Pre Burn-In Test Rev d

H. Gardiner

Underlined entries represent changes from previous step.

	c Freq	c Lev dBv	iding Pot	ar Panel Sw	0 Ohm Load	
Set-up prep	-	-	-	-	-	Attach special load; adjust oscillator for 1.26 VRMS (+2 dBv) at 1 kHz. Check meter accuracy.
163 Prep.	-	-	-	-	-	Set R68, R61 and R25 midrange.
Supply Voltage	-	-	-	-	-	Adjust R6 for +12 +/- .1 VDC, check for -12 +/- .4 VDC.
Distortion	100	+2	R	+4	Out	Adjust R33 so -6 dB lamp just lights, adjust R44 for +2 dBv out.
	100	+2	L	+4	Out	Adjust R61 and R25 for minimum distortion.
	100	↓20	L	+4	Out	Adj R68 for minimum distortion.
	100	+2	L	+4	Out	Adj R61 for minimum distortion less than .056%.
DC Tracking	2kHz	+2	R	+4	In	Adj R33 so -6 lamp just lights, R44 for +2 dBv out.
	2kHz	+2	L	+4	In	All lamps evenly lit.
	2kHz	Off	L	+4	In	Lamps extinguish at even rate.
	2kHz	+2	L	+4	In	-
	2kHz	↓40	L	+4	In	-4 lamp on, -8 lamp off.
	2kHz	+2	L--R	+4	In	Output within 1 dB from that at slider pots center position.
Rear Switch	2kHz	+2	L	-10	In	Output -11 +/- 3 dBv.
	2kHz	+2	L	Adj.	In	Rotate R38 rear panel cw; Output +6 +/- 3 dBv.
	2kHz	+2	L	Adj.	In	Rotate R38 rear panel ccw; output -19 +/- 3 dBv.
Freq. Resp.	2kHz	+2	R	+4	In	Output is reference level.
	20k	+2	R	+4	In	Reference level +/- 1 dB.
	20Hz	+2	R	+4	Out	"
	200	+2	R	+4	In	"
Noise	200	+2	R	+4	In	Short input after disconnecting from oscillator. Output less than -82 dBv. Reconnect to oscillator.
peat Distortion +						Wax pots.

350109

VCA

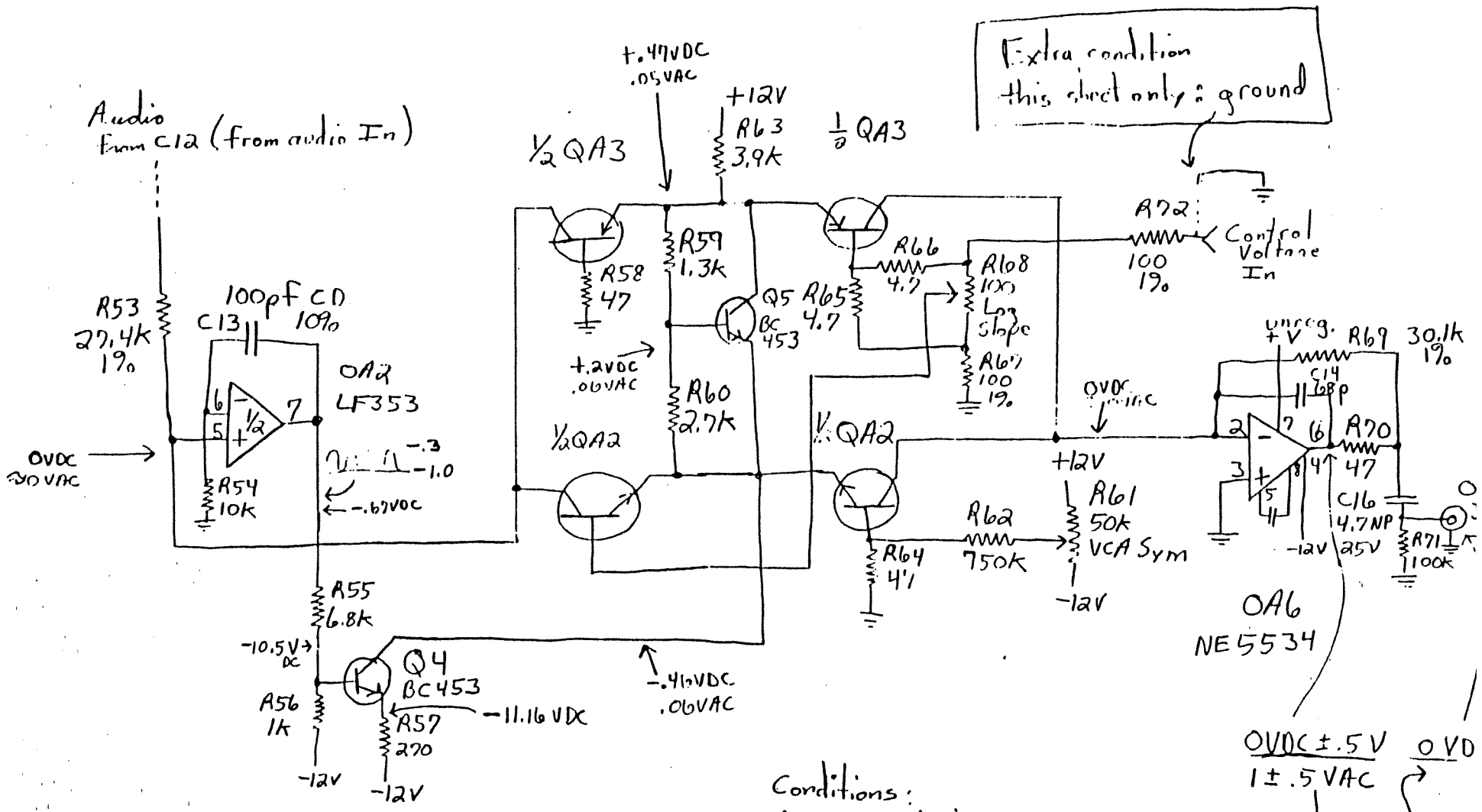

Conditions:
Power supply is ok
R68 centered.
Signal In 2khz +4dbm or +2dbV
Back Panel Switch +4.
600 Ω load attached.
R27 (slide pot), R25, R61, R33, R44 wipers set to 0 ± .1 VDC.

3/10/09

Control Signal Processor

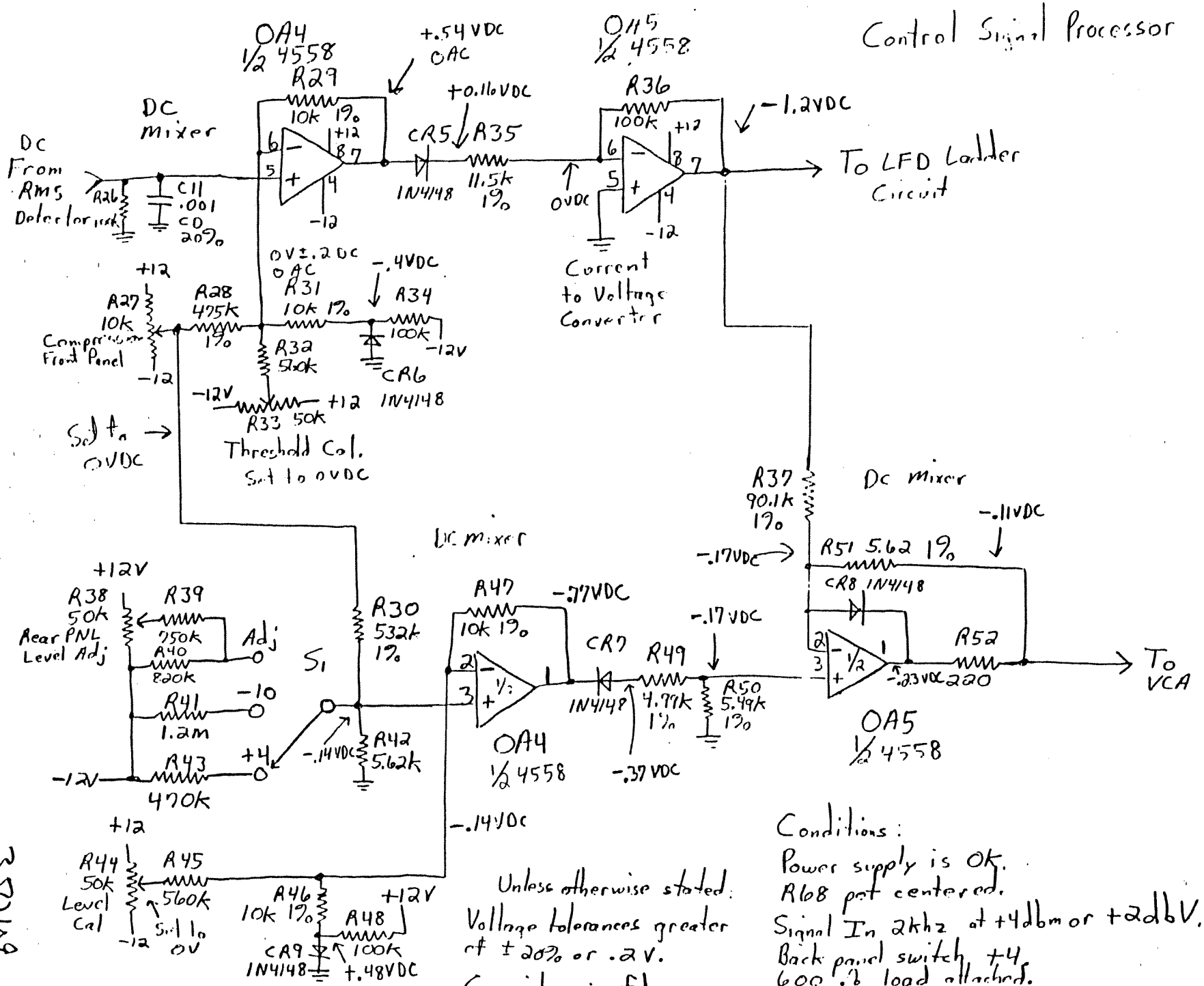

3501A

163

Voltage Supply

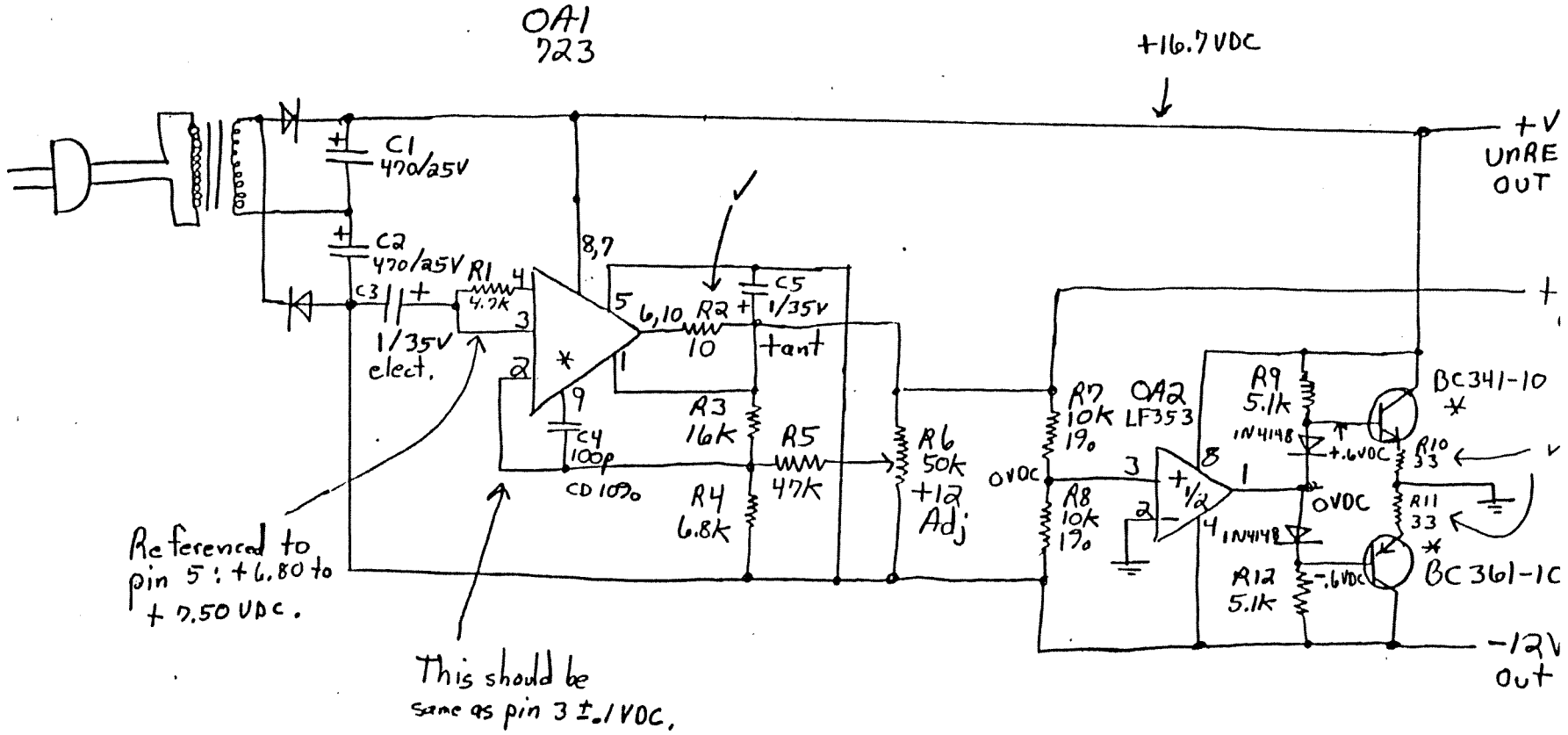

Unless specified otherwise:
Resistors 5% 1/4 W.
Capacitors in microfarads.

* Indicates heat sink on device.

601055

INITIAL FACTORY TEST AND ALIGNMENT PROCEDURES

DBX MODEL 162

TEST EQUIPMENT REQUIRED:

Quantity	ITEM	MFG. TYPE OR EQUIVALENT
1	Signal Oscillator	Kron-Hite 4200
1	Digital Multimeter	Dana 3300
1	Oscilloscope	Any (covering audio range)
1	Wide Range dB Meter	DBX SK-C-1026, HP427
1	Harmonic Distortion Meter	DBX SK-B-1070, Heath IM58 or IM5258 HP330, GR1500, 1900
1	± 3 dB Meter (Cal. Ref. 1 Volt)	DBX SK-C-1071
1	Test Unit	DBX Model 162
1	Test Adaptor (optional)	DBX TA-162
1	Tone Burst Generator	GR1396 B, DBX #260247
3	Phono-to-Phono Shielded Cables	
2	Input/Output Phono Shielded Cables	

162 TEST SET-UP

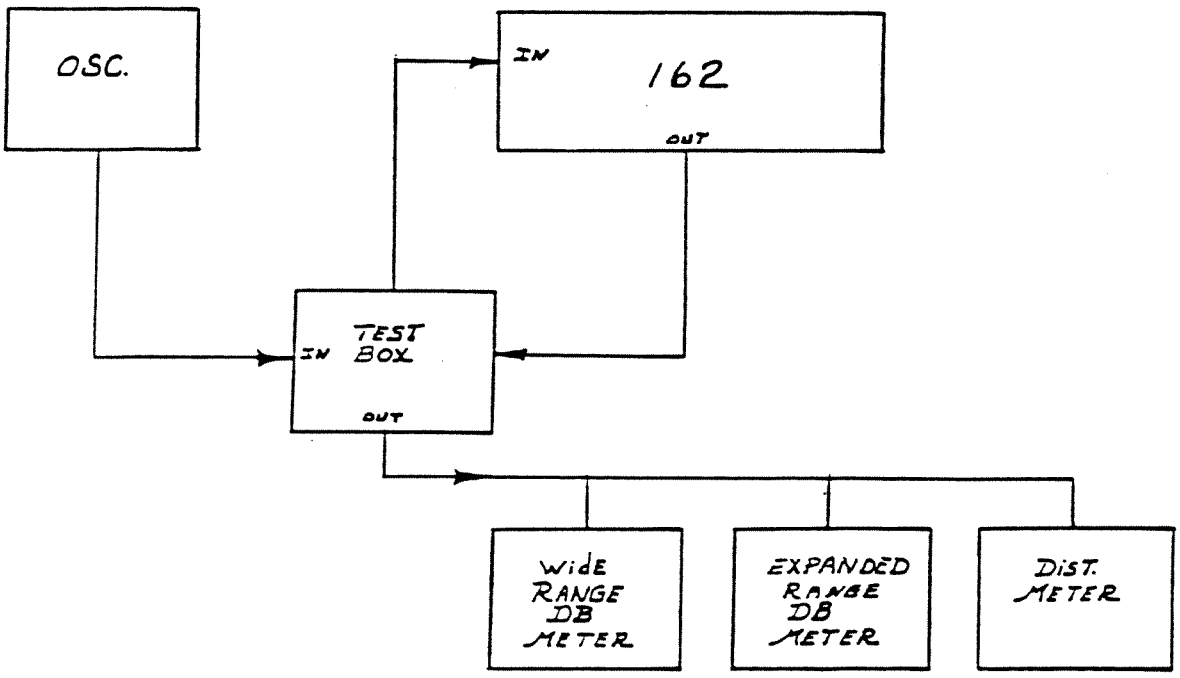

1) Power Supply Adjust:

1.1) Measure the voltage at pin 7 of the PC 7 connector, and adjust R21 for +15 volts ± .01 volts. Measure the voltage at pin 8 of the same connector. Must measure between - 14.85 to - 15.15 volts.

2) Dual RMS Calibration:

In the following procedure, anything written in double parenthesis (( )) concerns channel 2.

2.1) Apply 1.0 VRMS @ 1 khz to both channels, measure the voltage on the minus side of C29 ((minus side of C26)). Adjust R20 ((R10)) for " 0 " volts ± .001 volts . (with switch set for input mode)

2.2) Monitor the half wave rectified signal at the junction of R13 and R14 ((junction of R3 and R4)) of the dual RMS module. Step the oscillator to -60 db and adjust R23((R21)) if necessary, for a half wave.

2.3) Short the oscillator and adjust R24 ((R22)) for a DC voltage of +.430 volts. (Re-adjust R23((R21)) if required).

2.4) Measure "pin 3 " on both VCA'S, reading must be within ± .030 vdc. (If not, aijust R18 on VCA).

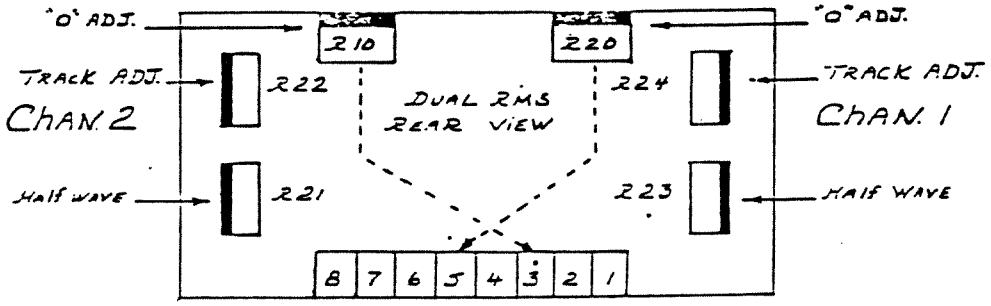

2.5) Repeat steps 2.1 thru 2.3 until the Dual RMS tracks as follows:

+10 db	-.060 vdc	(± .001)
0 db	+.000 vdc	(.000)
-10 db	+.060 vdc	(±.001)
-20 db	+.120 vdc	(±.002)
-30 db	+.180 vdc	(±.003)
-40 db	+.240 vdc	(±.004)
-50 db	+.300 vdc	(±.012)
-60 db	+.360 vdc	(±.024)
Shorted	+.430 vdc	(+.425 to +.480)

6.3) Turn power off and adjust the mechanical zeroes of M1 and M2. Turn power back on.

Control Location Diagram

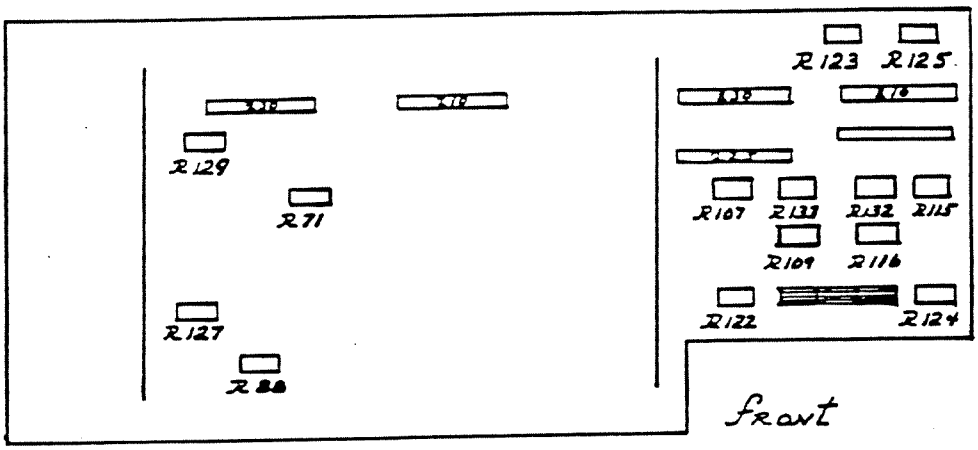

6.4) Mode switch " input ". Apply 1 VRMS @ 1 khz to " both" channels. Adjust R124 (R122) for odb on M1 (M2).

6.5) Step oscillator from - 30 db to + 10 db. Adjust R115 (R107) so that M1 (M2) track properly from - 30 to + 10 db.

7) C.M.R.:

7.1) Set mode switch (F.P.) to " output". Set compression control to " ∞ " . Apply 1 VRMS @ 1 khz to " both " channels. Step oscillator to - 30 db and adjust threshold control until both LEDS go out.

7.2) Step oscillator to + 10 db and adjust front panel gain control for a convenient reading on M1 (M2). Step oscillator to - 30db and adjust R132 (R133) for minimum change on M1 (M2), from previously set reading.

8) Gain Change M1:

8.1) Apply 1 VRMS @ 1 khz to " both "channels. Set compression control to " 1 ". Place mode switch to " gain change" adjust R124 to obtain a "0" db reading on M1.

8.2) Place mode switch to " input". Adjust R125 (R.P.) for "0" db on M1.

11) Output Gain Check:

11.1) Apply 1.00 VRMS at 1 khz to "both" channels. Place mode switch to " output". Set compression control to " 1 ". Set front panel gain control to "0". M1 and M2 should both read "0" as well as the external meters.

11.2) Set front panel gain control fully clockwise. M1 and M2 must read +20db. Check external meter both channels (± 1db)

11.3) Set front panel gain control fully counter-clockwise. M1 and M2 must read -20 db. Check external meter both channels (± 1db)

12) Compression Check:

12.1) Apply 1.00 VRMS at 1khz to " both " channels. Set mode switch to " output". Set compression control to "∞ ". Monitor channel 1 on the external meter. Step oscillator to -30 db and adjust the threshold control so that both LEDS are off. Note reading on the meters. Step oscillator to +10 db. Neither M1 or M2 or the external meter should change, more than ± 1db.

12.2) Repeat step(12.1) while monitoring channel 2 on the external meters.

12.3) Set compression to "4". While still monitoring channel 2 on the external meters, step oscillator to -30 db and adjust the front panel gain control for a convenient reading on the external meter. E.G. -30 db. Step oscillator to +10 db. Reading should change 10db adjust R88, if necessary.

12.4) After R88 is properly adjusted, step oscillator from -30 db to +10 db in 10 db steps. External meter should vary in 2.5 db steps.

12.5) Set threshold fully CW, apply 1.0 VRMS at 1KHz to both channels. Vary compression pot. Should be no change noted on external meters.

13) Distortion Adjustment:

13.1) Apply 1.00 VRMS at 100hz to "both" channels. Place mode switch to " output ". Place compression control to "∞ ". Set front panel gain control fully clockwise. Monitor channel 1 and adjust the threshold control for a reading of "0" on the external meter. Adjust the pot on the channel 1 VCA for minimum distortion. Must be less than .1%.

13.2) Repeat step (13.1) while monitoring channel 2 and adjust the pot on the channel 2 VCA.

18) Ground Compensation:

18.1) Apply 1.00 VRMS at 1khz t o "both" channels. Set U.U.T. for unity gain on the external meters. Place ground comp. switch to " GROUND COMP.". The external meter must read less than -40db. Perform this step for "both" channels. Return ground comp. switch to its normal position. ((Low side of DBM'S must be ungrounded for this test)).

19) Output Level:

19.1) Apply +10dbv at 1khz to "both" channels. Set compression control to "1". Monitor the output to the scope with an AC DVM.

19.2) Place the 600/10K switch to 10K. Adjust the front panel gain control until clipping is observed. Must occur at over 15.46 VRMS.

19.3) Place the switch to 600. Adjust front panel gain control until clipping is observed. Must occur at over 12.28 VRMS.

19.4) Perform steps (19.1) thru (19.4) on both channel 1 and channel 2.

19.5) Place 600/10K switch to the 10K position.

20) Quad Coupler Test:

20.1) Master Position

1) Connect the connector from the Quad Coupler Test Box to the Jones connector on the rear of U.U.T. Note that both "PLUS" and "MINUS" LED'S are lit. Monitor the output of the test box with a D.V.M. apply 1.00 VRMS at 1khz to"BOTH" channels. Set "THRESHOLD" fully CCW. Set "COMPRESSION" to "1". Place mode switch to "OUTPUT". Place "MASTER/SLAVE" switch to "MASTER".
2) Place test box to position #1. D.V.M. should read -.018± .002 VDC.
3) Place test box to position #2. D.V.M. should read 0± .1VDC.
4) Place test box to position #3. Vary the front panel gain control to fully CW D.V.M. should vary from > +1VDC to > -1VDC.
5) Place test box to position #4. D.V.M. should read 0 ± .1VDC.
6) Place test box in position #5 D,V.M. should read 0±.002 VDC. Rotate "COMPRESSION" fully CW. D.V.M. should read> -.2 VDC.
7) Place test box in position #6. D.V.M. should read 0± 1 VDC.

23) Seal Potentiometers:

23.1) Seal all pots except R125 and R123.

23.2) Install tie wraps to secure all modules.

24) Burn-In:

24.1) Place burn-in racks with appropriate input power applied. (120 or 240 volts.)

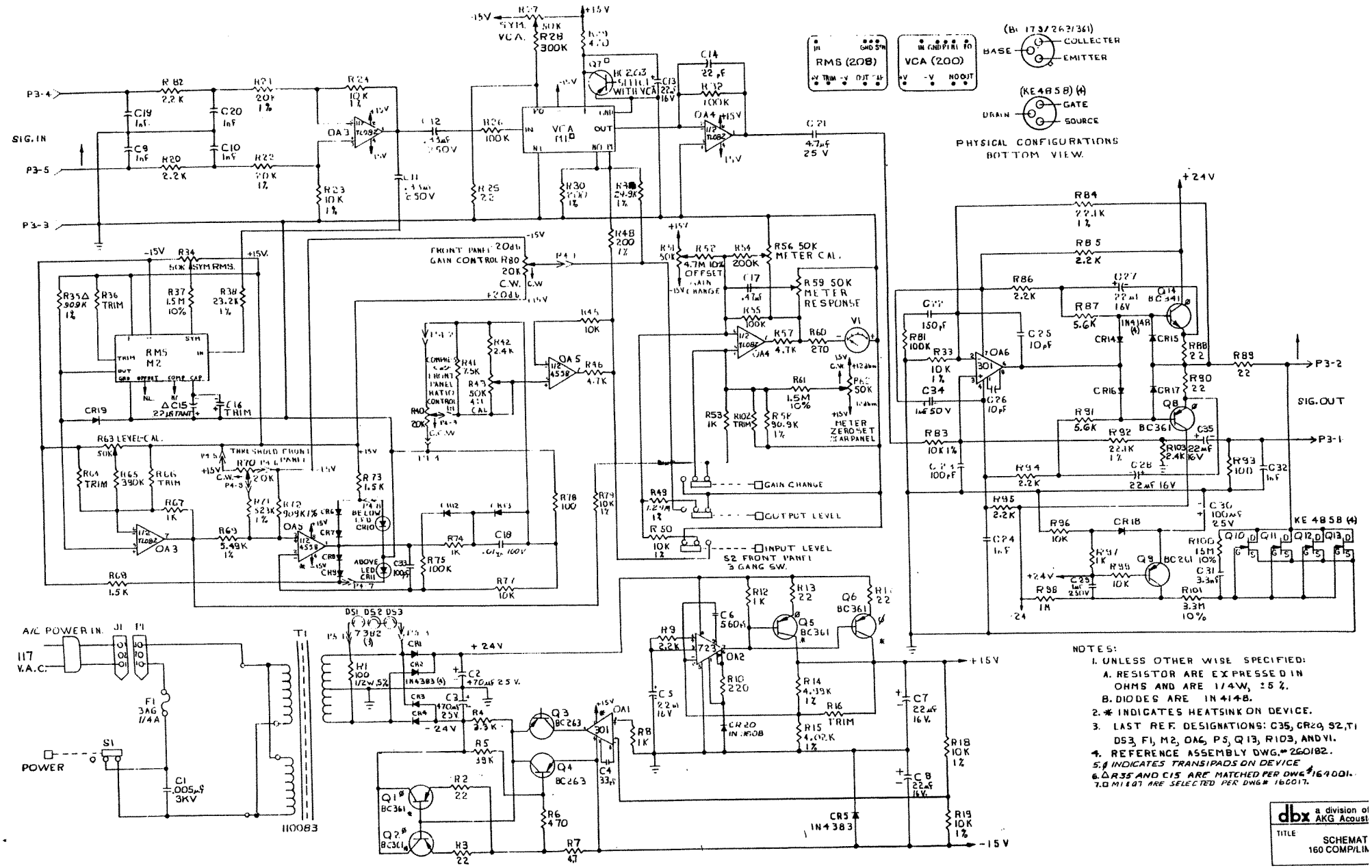

NOTES:

1. UNLESS OTHER WISE SPECIFIED:
   A. RESISTOR ARE EXPRESSED IN OHMS AND ARE 1/4W, ±5%.
   B. DIODES ARE IN4148.
2. * INDICATES HEATSINK ON DEVICE.
3. LAST REF. DESIGNATIONS: C35, CR20, S2, T1, DS3, F1, M2, OA6, P5, Q13, R103, AND V1.
4. REFERENCE ASSEMBLY DWG.# 260182.
5. ∅ INDICATES TRANSIPADS ON DEVICE
6. △R35 AND C15 ARE MATCHED PER DWG.# 164001.
7. ○M1 & Q7 ARE SELECTED PER DWG# 160017.

dbx a division of AKG Acoust

TITLE SCHEMAT 160 COMP/LIM

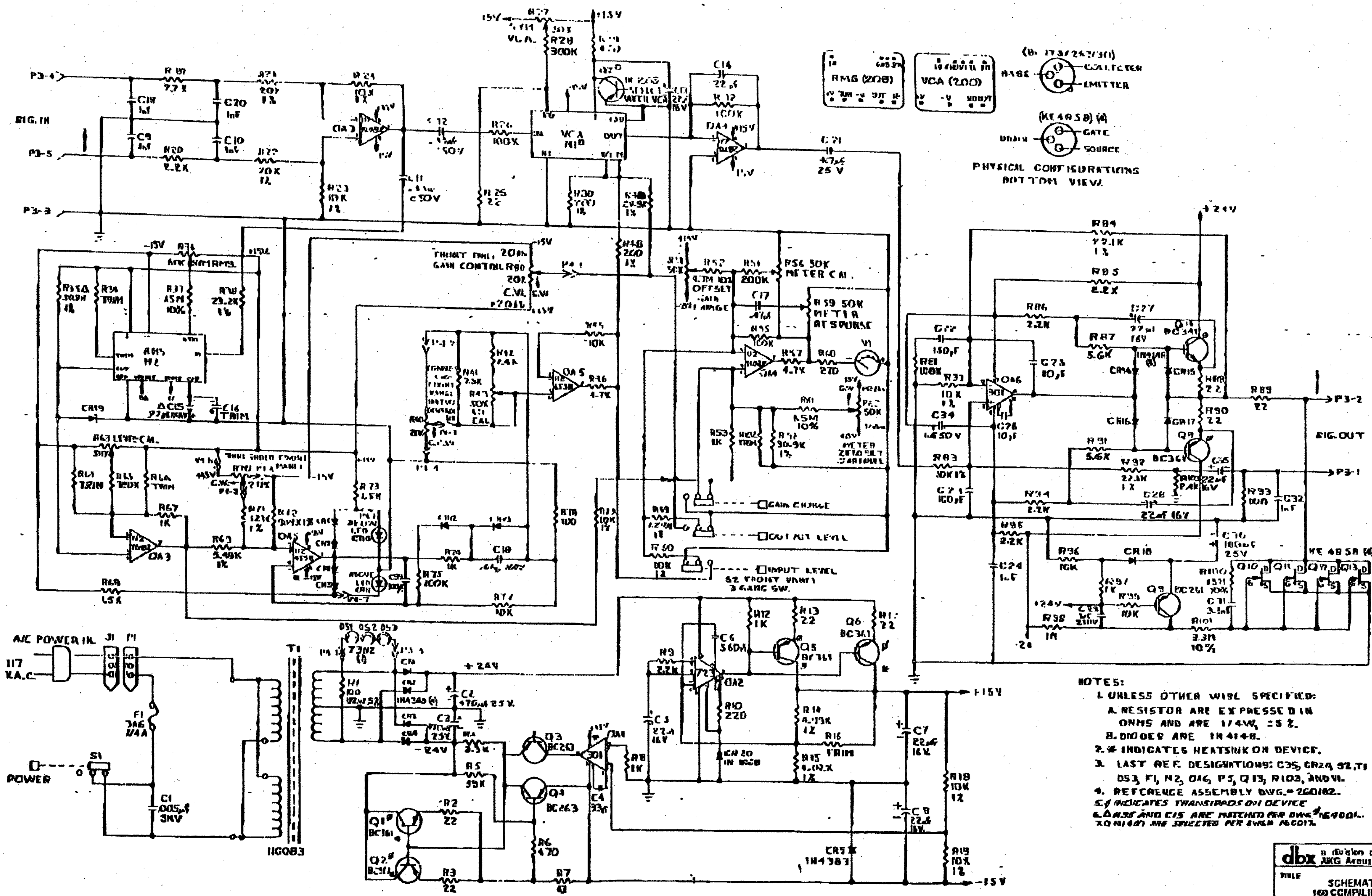

NOTES:

1. UNLESS OTHERWISE SPECIFIED:
   A. RESISTOR ARE EXPRESSED IN OHMS AND ARE 1/4W, ±5 %.
   B. DIODES ARE 1N4148.
2. # INDICATES HEATSINK ON DEVICE.
3. LAST REF. DESIGNATIONS: C35, CR2?, S2, T1, DS3, F1, M2, OA6, P5, Q13, R103, AND V1.
4. REFERENCE ASSEMBLY DWG. # 260182.
5. ∮ INDICATES TRANSIPADS ON DEVICE
6. Δ R35 AND C15 ARE MATCHED PER DWG # 16400A. Q10-Q13 ARE SELECTED PER SWG # 16001.

dbx a division of AKG Acoustics

TITLE SCHEMATIC 160 COMP/LIMIT