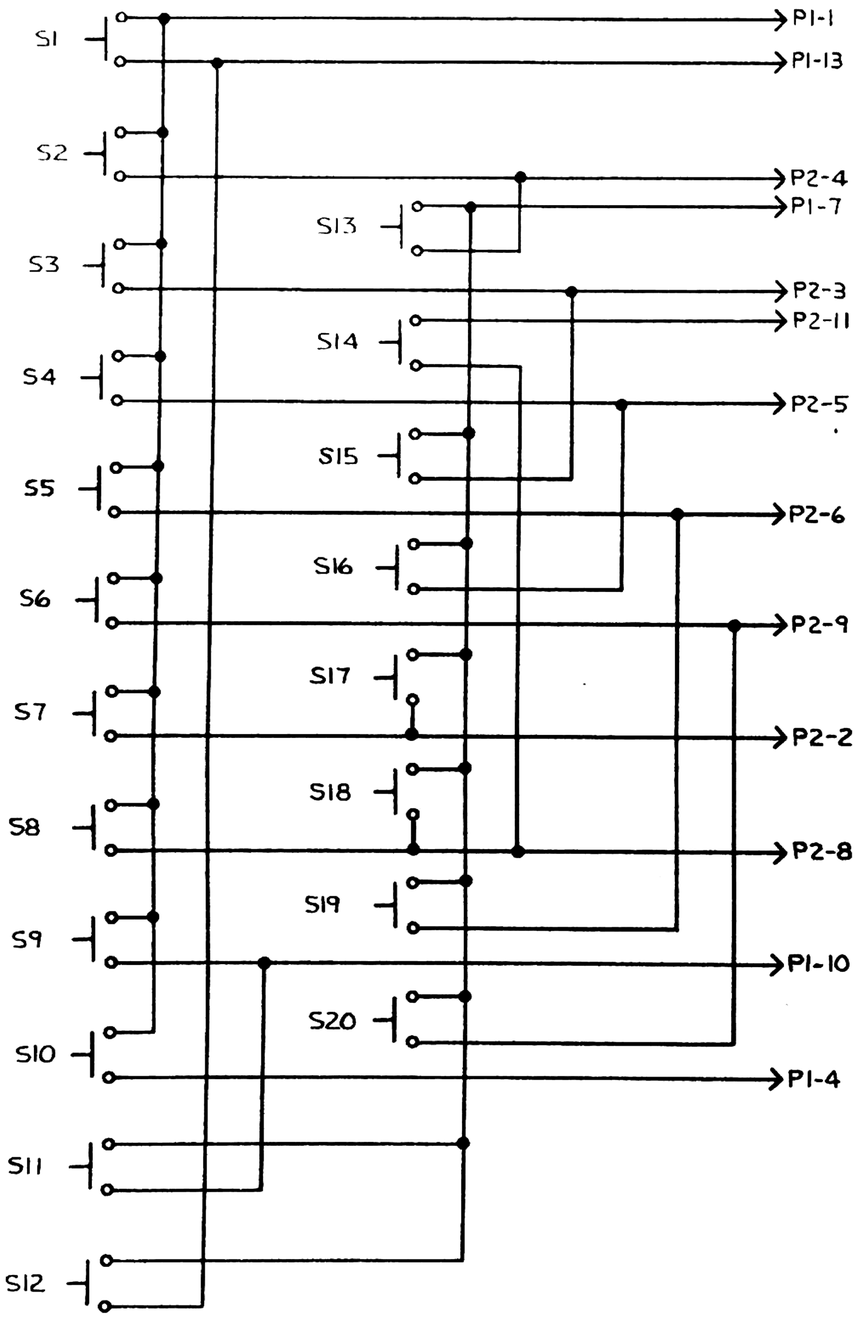

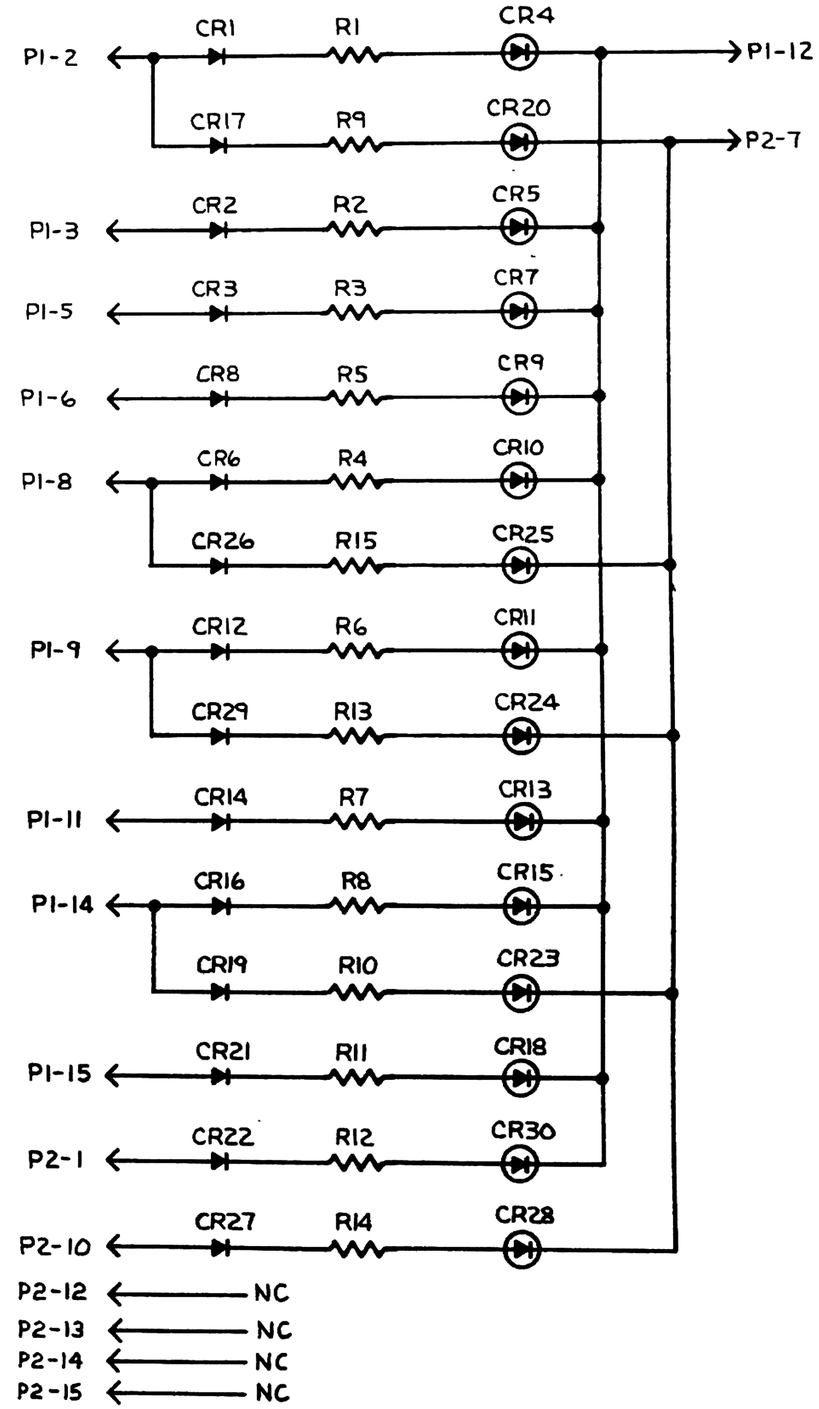

NOTES:

1. UNLESS OTHERWISE SPECIFIED:
   A. ALL RESISTORS ARE 100 OHMS AND ARE ¼ WATT 5%.
   B. ALL DIODES ARE 140031.
   C. ALL LEDS ARE 140073 AND ARE REPRESENTED BY ⊕.
   D. ALL SWITCHES ARE 250063

REF DESIGNATION	
J2	
CR30	
R15	
S20	
LAST	NOT USED

BRUNING 40-107 37785

REV.	DESCRIPTION	DATE	DRAWN/APPD
	REVISIONS		

THESE DRAWINGS AND SPECIFICATIONS ARE THE PROPERTY OF DBX, INC. AND SHALL NOT BE REPRODUCED, COPIED OR USED AS THE BASIS FOR MANUFACTURE OR SALE OF APPARATUS WITHOUT EXPRESSLY WRITTEN AUTHORIZATION. © dbx

UNLESS OTHERWISE SPECIFIED ALL DIMENSIONS ARE IN INCHES AND/OR MILLIMETERS (mm)
TOLERANCE ON INCHES
.XX ± .015 .XXX ± .005
TOLERANCE ON MILLIMETERS (mm)
(.XX) ± .38 (mm) (.XXX) ± .15 (mm)
ANGLES ± 1/2° FRACTIONS ± 1/32
APPROVED FOR PRODUCTION TOOLING
APPR'D DATE

APPROVAL	DATE
DRAWN PV	6/10/80
CHECKED GFS	7/22/80
PROJ. ENG. R.O.	8/12/80
CH. ENG. LBT	8/18/80
RELEASED	8/18/

20/20 USED ON

dbx Inc. Newton, Ma.

SCHEMATIC
SWITCH BOARD #1

SCALE: — SIZE C NUMBER 340351 REV 00

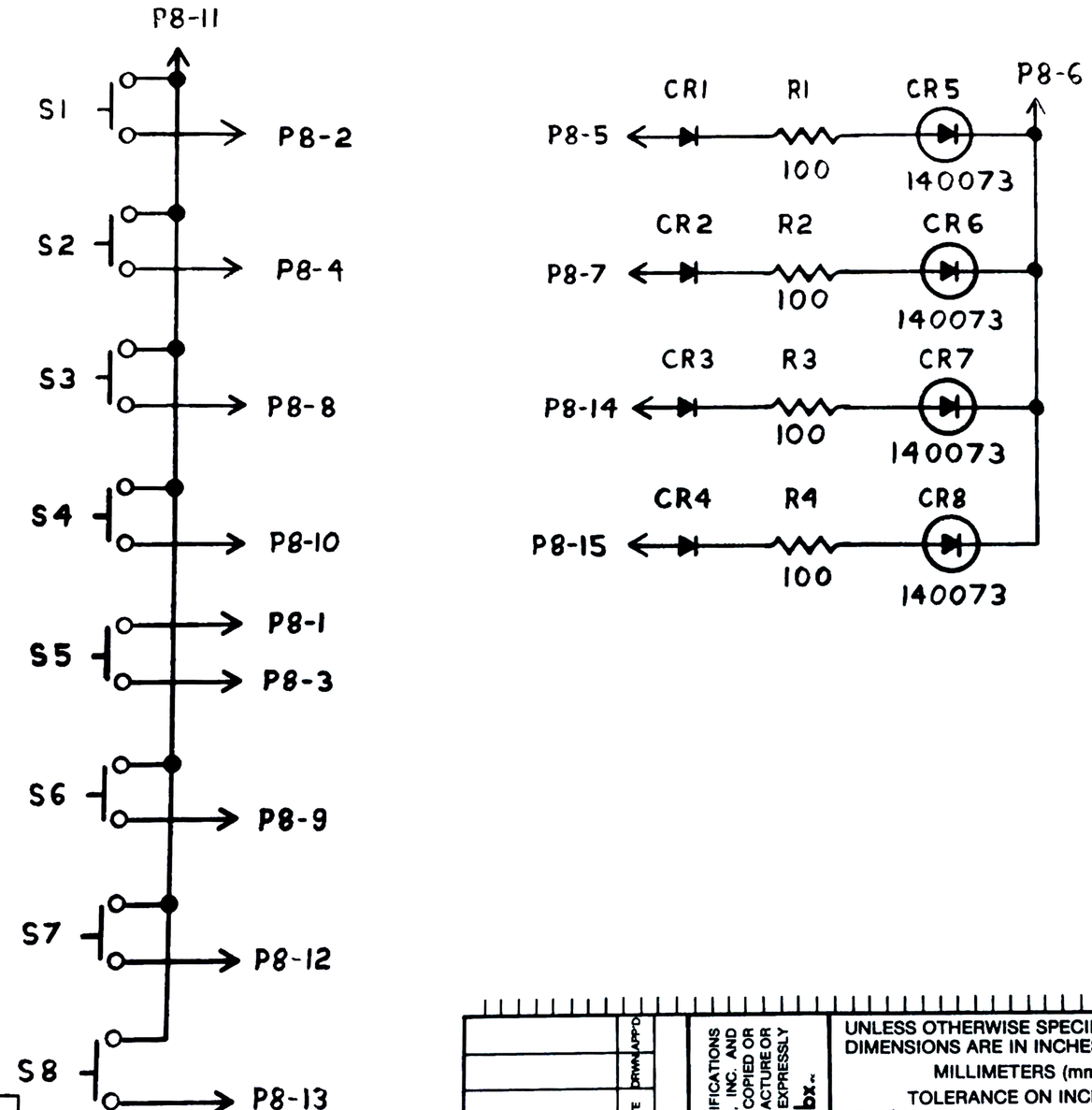

NOTES:

1. UNLESS OTHERWISE SPECIFIED:
   A. ALL RESISTORS ARE EXPRESSED IN OHMS AND ARE 1/4 W, 5 %.
   B. ALL DIODES ARE DBX P/N 140031.
   C. ALL SWITCHES ARE DBX P/N 250063
2. REF : PC BOARD ASSY. NO. 260426.

REF. DES.	
HIGHEST DES. USED	NOT USED
S8	
P8	
CR 8	
R4	

BRUNING 40-T07 37785

20/20	USED ON

REV.	DESCRIPTION	DATE	DRWN	APP'D

REVISIONS

THESE DRAWINGS AND SPECIFICATIONS ARE THE PROPERTY OF DBX, INC. AND SHALL NOT BE REPRODUCED, COPIED OR USED AS THE BASIS FOR MANUFACTURE OR SALE OF APPARATUS WITHOUT EXPRESSLY WRITTEN AUTHORIZATION. © dbx.

UNLESS OTHERWISE SPECIFIED ALL DIMENSIONS ARE IN INCHES AND/OR MILLIMETERS (mm)

TOLERANCE ON INCHES
.XX ± .015 .XXX ± .005

TOLERANCE ON MILLIMETERS (mm)
(.XX) ± .38 (mm) (.XXX) ± .15 (mm)

ANGLES ± 1/2° FRACTIONS ± 1/32

APPROVED FOR PRODUCTION TOOLING

APPR'D	DATE

APPROVAL	DATE
DRAWN MJC	6/12/80
CHECKED GFG	8/24/80
PROJ. ENG. R.J.	7/12/80
CH. ENG. CBT	8/13/80
RELEASED	8/13/80

dbx inc. Newton, Ma.

SCHEMATIC
SWITCH BD. # 2
EQ

SCALE:	SIZE	NUMBER	REV
SHT 1 OF 1	B	340352	00

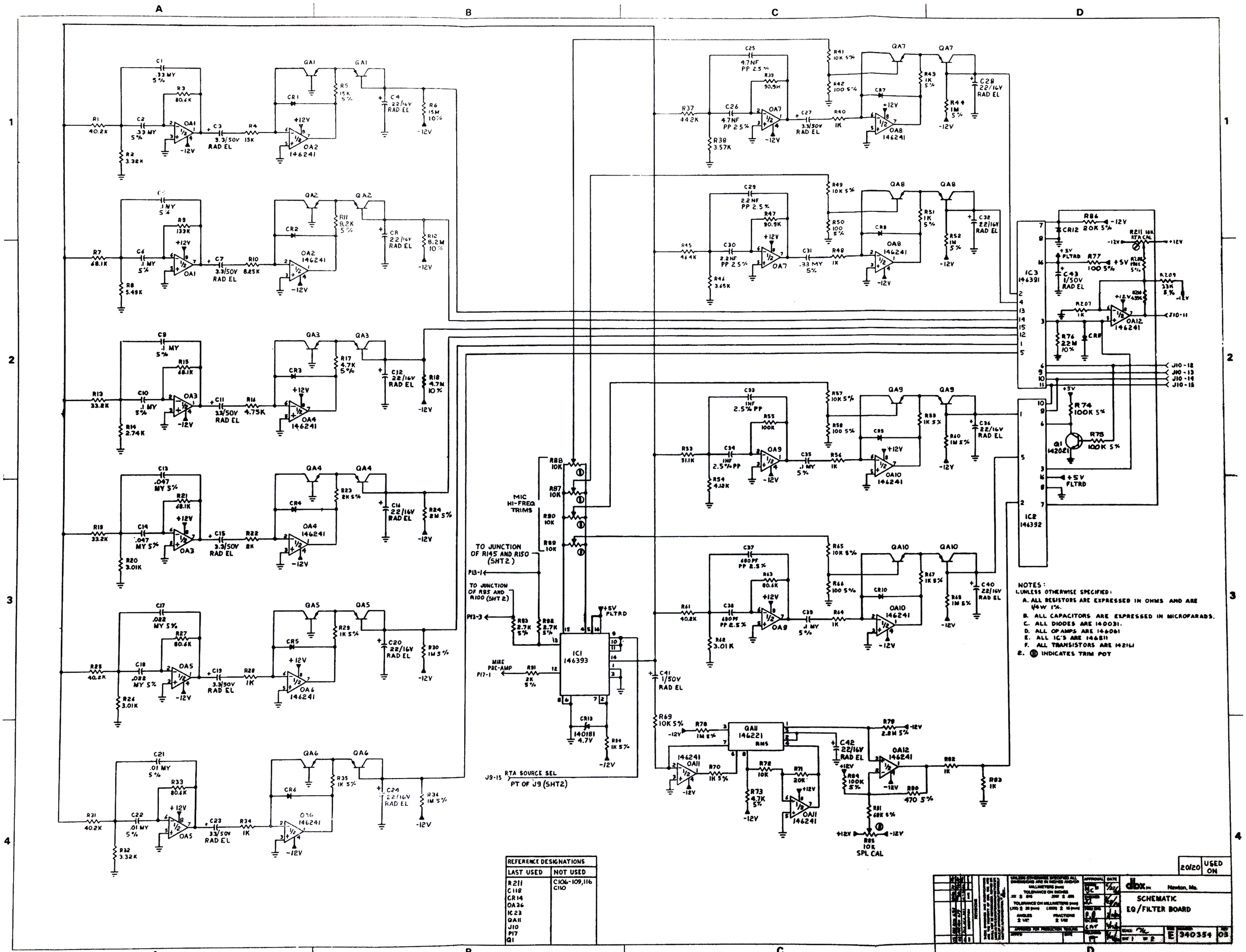

REFERENCE DESIGNATIONS	
LAST USED	NOT USED
R211	C106-109,116
C118	C110
CR14	
OA36	
IC23	
QA11	
J10	
P17	
Q1	

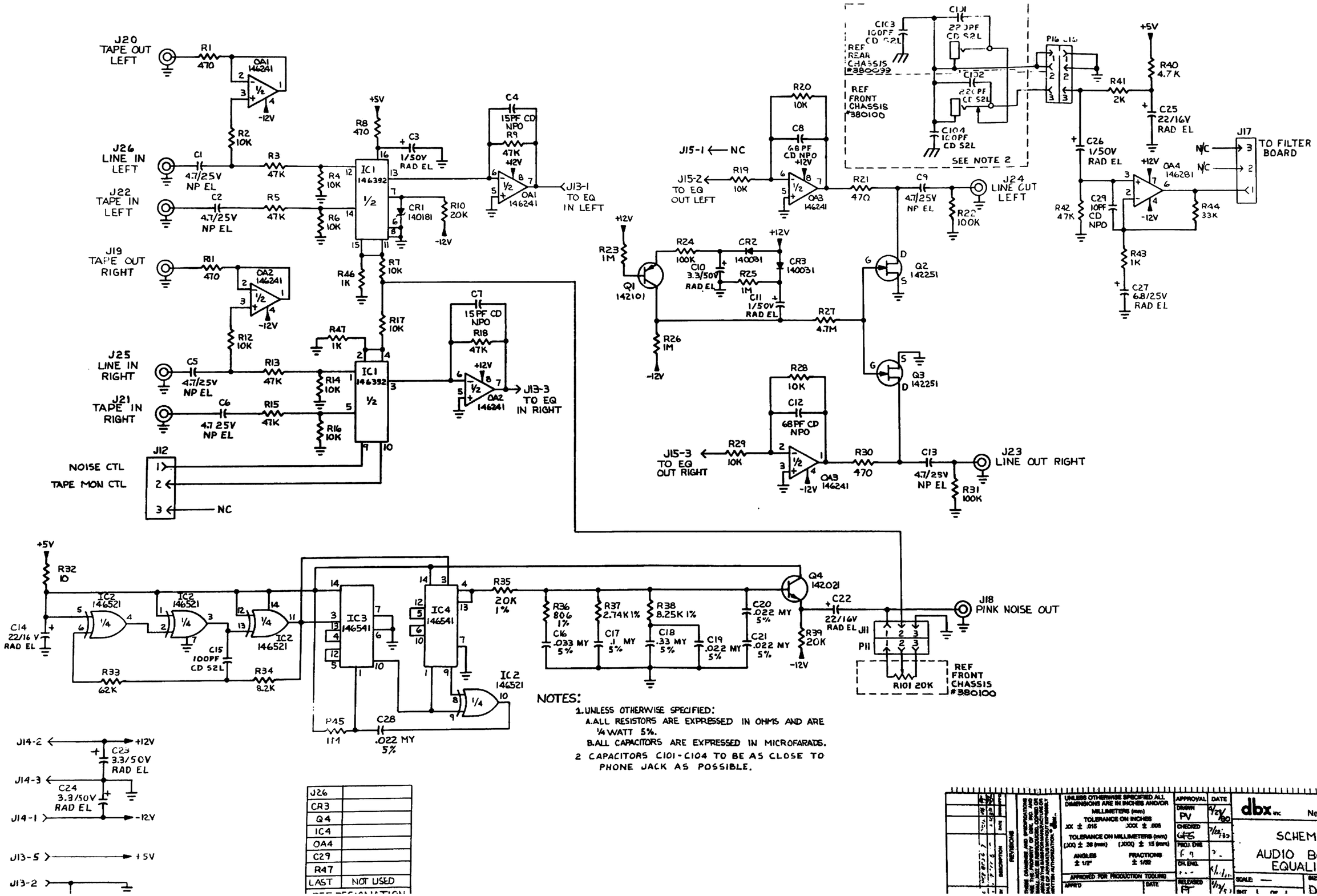

NOTES:

1. UNLESS OTHERWISE SPECIFIED:
   A. ALL RESISTORS ARE EXPRESSED IN OHMS AND ARE ¼ WATT 5%.
   B. ALL CAPACITORS ARE EXPRESSED IN MICROFARADS.
2. CAPACITORS C101-C104 TO BE AS CLOSE TO PHONE JACK AS POSSIBLE.

J26	
CR3	
Q4	
IC4	
OA4	
C29	
R47	
LAST	NOT USED

REVISIONS

UNLESS OTHERWISE SPECIFIED ALL DIMENSIONS ARE IN INCHES AND/OR MILLIMETERS (mm)
TOLERANCE ON INCHES .XX ± .015 .XXX ± .005
TOLERANCE ON MILLIMETERS (mm) (.XX) ± .38 (mm) (.XXX) ± .15 (mm)
ANGLES ± 1/2° FRACTIONS ± 1/32
APPROVED FOR PRODUCTION TOOLING

APPROVAL	DATE
DRAWN PV	4/23/80
CHECKED GHS	7/22/80
PROJ. ENG.	
CK. ENG.	
RELEASED	7/22/80

dbx inc Newton, Ma.

SCHEMATIC
AUDIO BOARD
EQUALIZER

SIZE D NUMBER 340360

20/20 USED ON

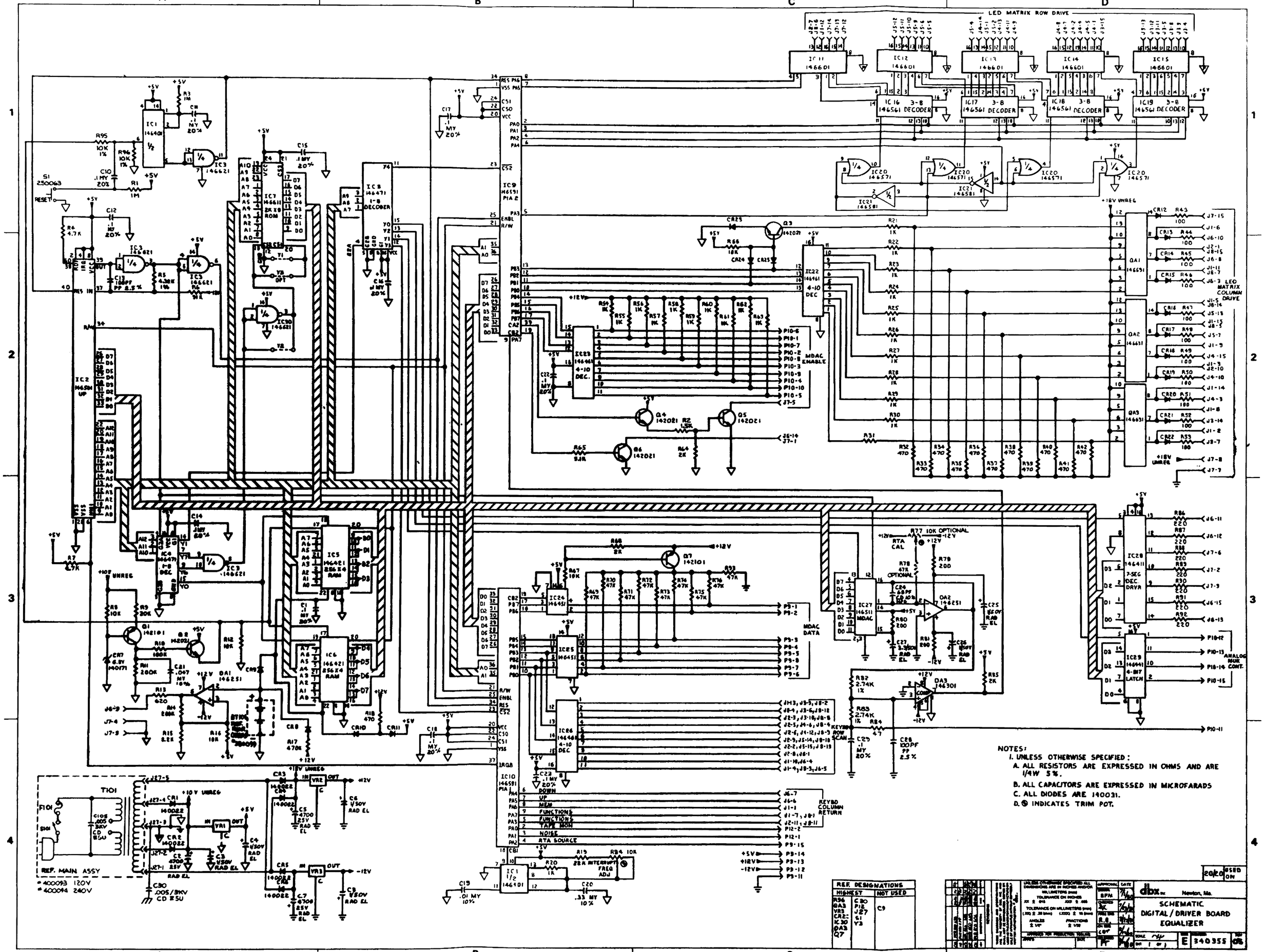
LED MATRIX ROW DRIVE
LED MATRIX COLUMN DRIVE
MDAC ENABLE
MDAC DATA
KEYBD ROW SCAN
KEYBD COLUMN RETURN
ANALOG MUX CONT.
RTA CAL
R77 10K OPTIONAL
R78 47K OPTIONAL
INTERRUPT FREQ ADJ
REF. MAIN ASSY
400093 120V
400094 240V
NOTES:
1. UNLESS OTHERWISE SPECIFIED:
A. ALL RESISTORS ARE EXPRESSED IN OHMS AND ARE 1/4W 5%.
B. ALL CAPACITORS ARE EXPRESSED IN MICROFARADS
C. ALL DIODES ARE 1N0031.
D. ⊗ INDICATES TRIM POT.
REF. DESIGNATIONS
HIGHEST
NOT USED
dbx INC
Newton, Ma.
SCHEMATIC
DIGITAL / DRIVER BOARD
EQUALIZER
E 340355

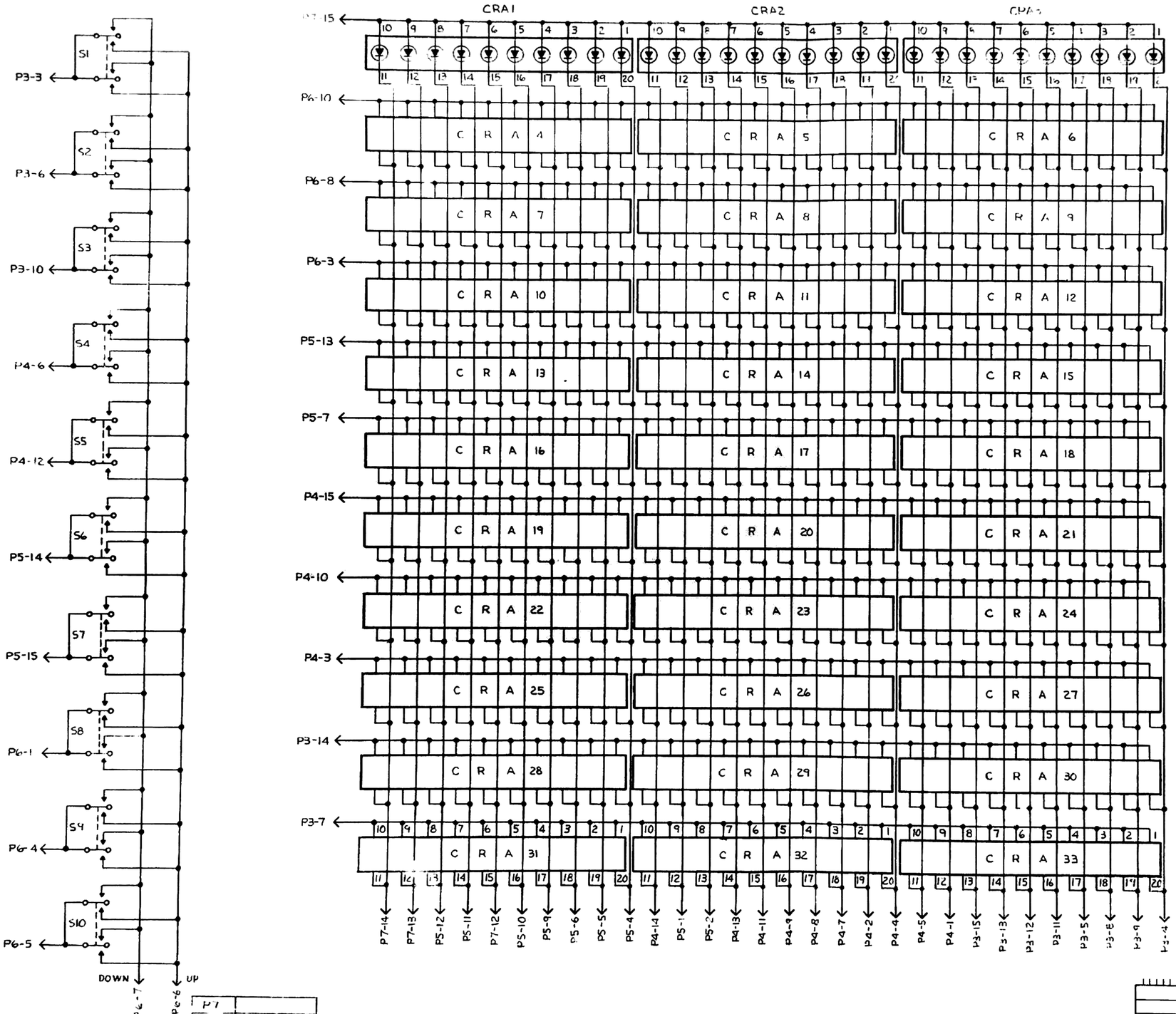

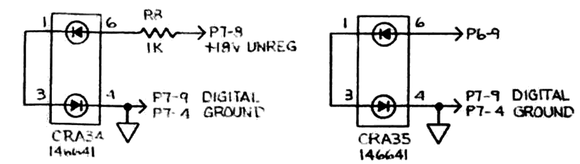

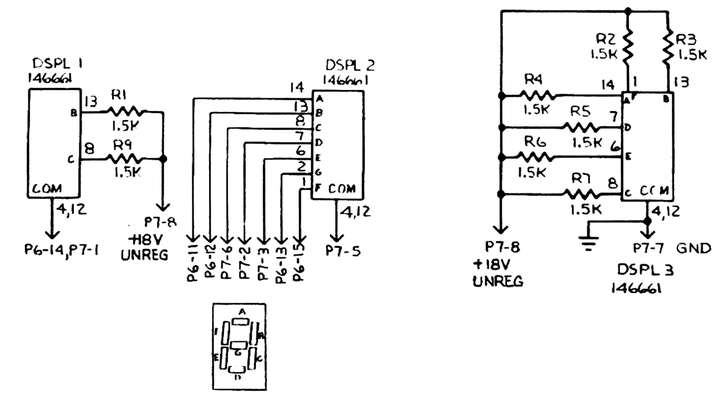

NOTES:

1. UNLESS OTHERWISE SPECIFIED:
   A. ALL RESISTORS ARE EXPRESSED IN OHMS AND ARE ¼W 5%.
   B. ALL DISPLAYS (CRA) ARE dbx P/N 146651.
   C. ALL SWITCHES ARE DBX P/N 250064

P3-1,2 ← NC
P5-3,8 ← NC
P6-2 ← NC
P7-10,11 ← NC

P7	
R1	
DSPL 3	
CRA 35	
R4	
R2	R3
DESIGNATION	

20/20 USED ON

UNLESS OTHERWISE SPECIFIED ALL DIMENSIONS ARE IN INCHES AND/OR MILLIMETERS (mm)
TOLERANCE ON INCHES
XX ± .015 XXX ± .005
TOLERANCE ON MILLIMETERS (mm)
(XX) ± .38 (mm) (XXX) ± .15 (mm)
ANGLES ± 1/2° FRACTIONS ± 1/32
APPROVED FOR PRODUCTION TOOLING

APPROVAL	DATE
DRAWN PV	4/16/7
CHECKED P	1/1
PROJ ENG	
CH ENG	1/1
RELEASED P	

dbx inc Newton, Ma.

SCHEMATIC
DISPLAY BOARD
EQUALIZER

SIZE D NUMBER 3402E2 REV

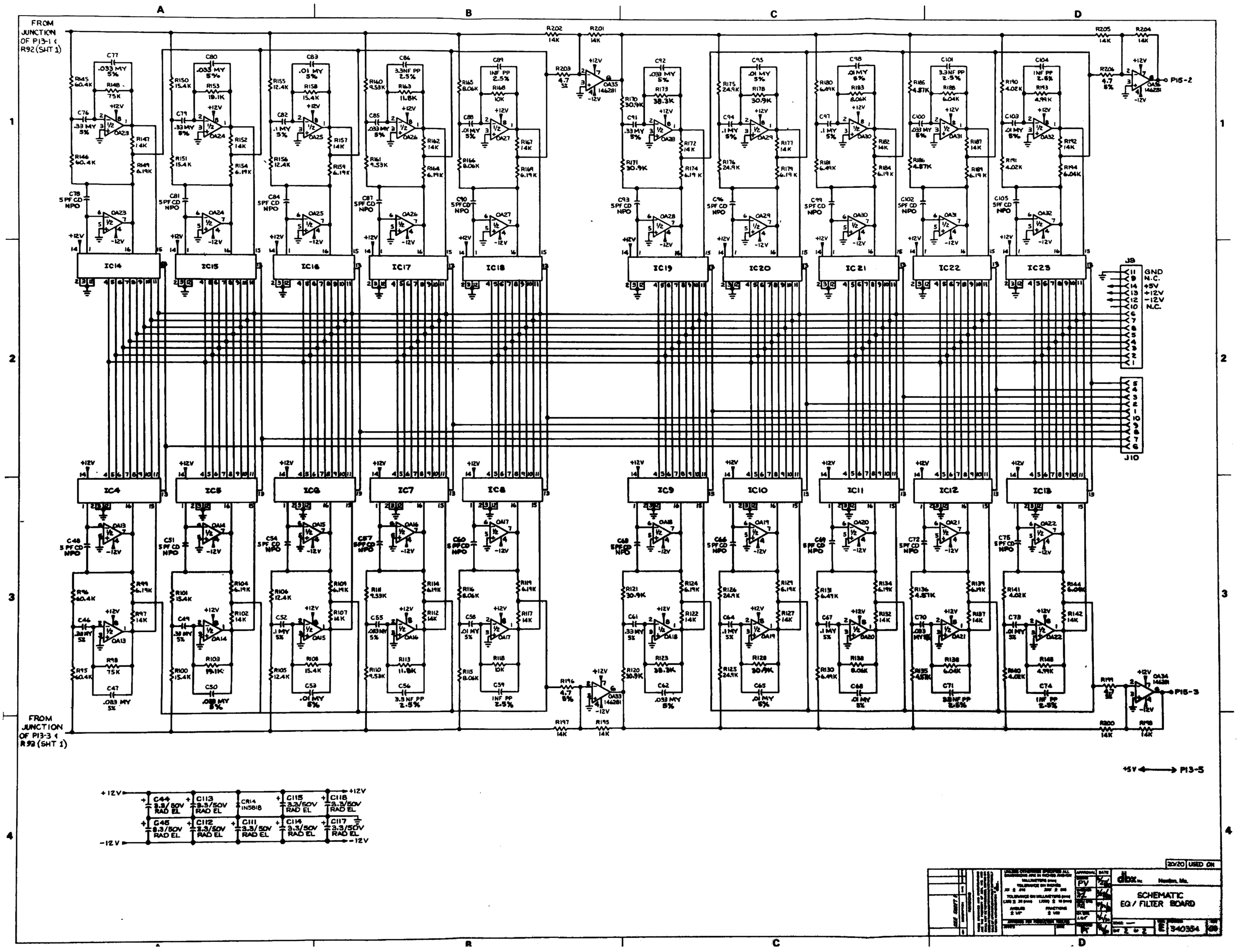
FROM JUNCTION OF P13-1 & R92 (SHT 1)
FROM JUNCTION OF P13-3 & R92 (SHT 1)
P15-2
P15-3
P13-5
J9
GND
N.C.
+5V
+12V
-12V
N.C.
J10
IC4
IC5
IC6
IC7
IC8
IC9
IC10
IC11
IC12
IC13
IC14
IC15
IC16
IC17
IC18
IC19
IC20
IC21
IC22
IC23
CR14 1N5818
C44 3.3/50V RAD EL
C113 3.3/50V RAD EL
C115 3.3/50V RAD EL
C118 3.3/50V RAD EL
C45 3.3/50V RAD EL
C112 3.3/50V RAD EL
C111 3.3/50V RAD EL
C114 3.3/50V RAD EL
C117 3.3/50V RAD EL
20/20 USED ON
dbx Inc. Newton, Ma.
SCHEMATIC
EQ/FILTER BOARD
E
340354