dbx

COMPUTER-CONTROLLED 5 BAND
DYNAMIC RANGE CONTROLLER

Model 5BX-DS

Service Manual

CONTENTS

SPECIFICATIONS 2
ADJUSTMENT PROCEDURES 3–7
PERFORMANCE TESTS 8–13
ADJUSTMENT LOCATIONS 14
BLOCK DIAGRAM 15
WIRING LAYOUT 16
WIRING BOARD LAYOUT (1) 17
WIRING BOARD LAYOUT (2) 18
WIRING BOARD LAYOUT (3) 29
WIRING BOARD LAYOUT (4) 20
SCHEMATIC DIAGRAM (1) 21
SCHEMATIC DIAGRAM (2) 22
EXPLODED VIEW 23
REPLACEMENT PARTS LIST 24–38

SPECIFICATIONS

● ELECTRICAL

Frequency response(20 Hz to 20 kHz).....	+/–0.5 dB(no expansion)
Total harmonic distortion	0.15% any setting
Intermodulation distortion	0.15% any setting(IHF)
	0.15% any setting(SMPTE)
Dynamic range(peak A–weited noise).....	106 dB
Maximum input	5 Vrms
Maximum output	5 Vrms
Expansion	to 50 % increase, 20 dB downward(maximum)
	Five bands : (50 Hz, 300 Hz, 2.5 kHz and 10 kHz crossovers for all signal–processing functions)
Impact recovery(to potential +10 dB)....	Program–dependent : Five bands
Compression (overeasy, from none to infinity)	40 dB of gain(maximum)
Transition level(set at 200 mV).....	Ranges from 18 mV to 2.2 V

● GENERAL

Dimensions(W x H x D).....	19"(17–1/8") x 3–1/2" x 11–7/8"
	483mm(435mm) x 88mm x 302mm
	(without rack mounting bracket)
Weight	10 lbs 6 oz.
	4.71 kg.
Power consumption	28 W
Power requirement	100–120 V/220–240 V, 50/60 Hz

Notes : IHF IMD is measured with 19 kHz and 20 kHz mixed 1:1, output 1 V.
SMPTE IMD is measured with 60 Hz and 7 kHz mixed 4:1, output 1 V.

ADJUSTMENT PROCEDURE

BEFORE TEST

- Confirm that the voltage-selector switch is in the proper position.
- Inspect the unit to be tested and verify that all interconnect cables are properly installed.
- Allow a minimum of 10 minutes warm-up for the test equipments and the unit under test.

INSTRUMENTS REQUIRED

- Audio signal generator
- AC voltmeter
- DC voltmeter
- Oscilloscope
- Digital voltmeter
- Frequency counter

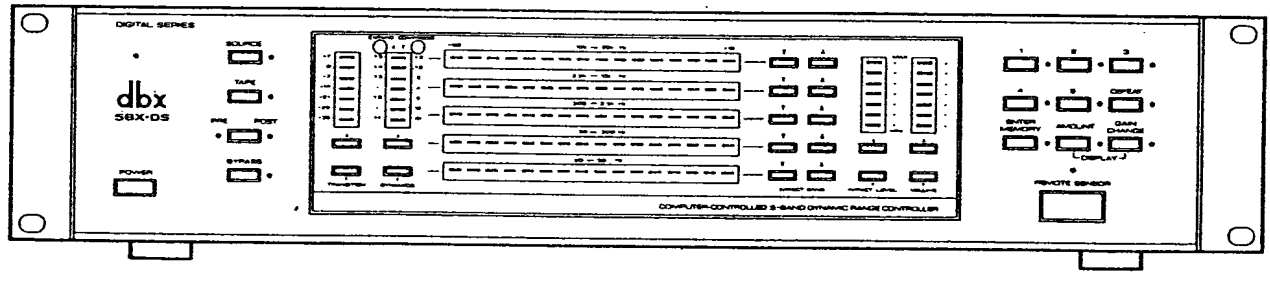

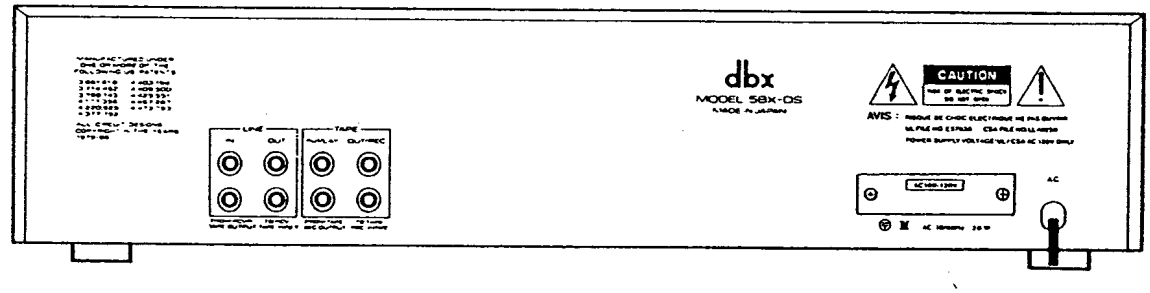

● POWER SUPPLY VOLTAGE CHECK

1. Depress the power switch and verify that the power LED lights.
2. Monitor the following points (with respect to ground) and verify the following power supply conditions:

	Probe location	Test condition	Tolerance
1	Output of U803	+5.6 V	±0.3 V
2	Output of U801	+12.0 V	±0.6 V
3	Output of U802	−12.0 V	±0.6 V
4	D804 cathode side	+7.5 V	±0.4 V
5	D805 anode side	−7.5 V	±0.4 V

ADJUSTMENT PROCEDURE

● TRANSITION OFFSET ADJUSTMENT

1. Set the switches as follows:

DEFEAT switch	In position
SOURCE switch	In position
PRE/POST switch	PRE position
BYPASS switch	Out position

2. Connect the oscilloscope to TP10.
3. Adjust RV701 for 0 Vdc ±25 mV.

● VCA SYMMETRY ADJUSTMENT

1. Set the switches as follows:

DEFEAT switch	In position
SOURCE switch	In position
PRE/POST switch	PRE position
BYPASS switch	Out position

2. Short the "FROM RECEIVER/TAPE OUTPUT" inputs to ground.
3. Connect the signal generator to TP2–10 (HB2) and apply a 100 Hz, –20 dBV(100 mV rms).
4. Connect the oscilloscope to TP3L, and set it to 20 mV/div and 50 ms/div.
5. Adjust a potentiometer RV501 for minimum waveshape. Wave shape is substantially as shown below.

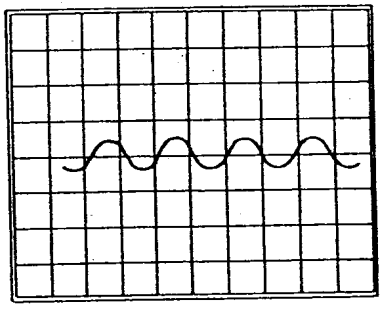

Wrong

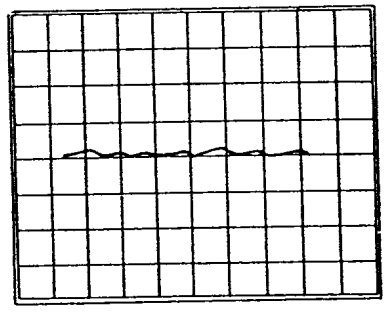

Right

6. Repeat for the following potentiometers at TP3L for left channel.

	potentiometer	SG input connection
HB1	RV502	TP2–9
MB	RV503	TP2–8
LB1	RV504	TP2–7
LB2	RV505	TP2–6

7. Repeat for the right channel, but connect the oscilloscope to TP3R.

	potentiometer	SG input connection
HB2	RV301	TP2–1
HB1	RV302	TP2–2
MB	RV303	TP2–3
LB1	RV304	TP2–4
LB2	RV305	TP2–5

● RMS SYMMETRY ADJUSTMENT

1. Set the switches as follows:

DEFEAT switch ..... In position
SOURCE switch ..... In position
PRE/POST switch ..... PRE position
BYPASS switch ..... Out position

2. Short the pin1 and pin4 of TPs on the control P.C. Board.
3. Apply a 30 Hz, 110 mV rms signal to left and right "FROM RECEIVER/TAPE OUTPUT" input jacks.
4. Connect the oscilloscope to TP9, and adjust the potentiometer RV605 for the output becomes symmetrical and clear.

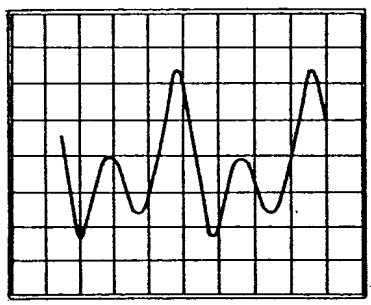

Wrong

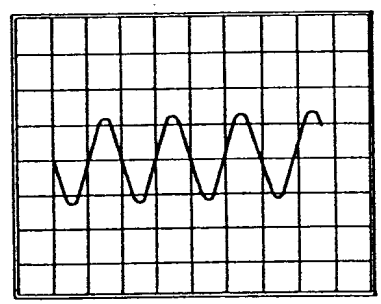

Right

5. Connect the oscilloscope to TP8, reset the input signal to a 100 Hz 150 mV rms, adjust RV604 for best symmetry.
6. Connect the oscilloscope to TP7, reset the input signal to a 1 kHz 220 mV rms, adjust RV603 for best symmetry.
7. Connect the oscilloscope to TP6, reset the input signal to a 6 kHz 80 mV rms, adjust RV602 for best symmetry.
8. Connect the oscilloscope to TP5, reset the input signal to a 15 kHz 25 mV rms, adjust RV601 for best symmetry.

ADJUSTMENT PROCEDURE

● EXPANSION ADJUSTMENT

1. Set the switches as follows:

   DEFEAT switch ..... In position
   SOURCE switch ..... In position
   PRE/POST switch ..... PRE position
   BYPASS switch ..... Out position

2. Short the pin1 and pin4 of TPs on the control PCB.
3. Apply a 1 kHz signal to left and right "FROM RECEIVER/TAPE OUTPUT" input jacks, and adjust the audio signal generator's output for 0 Vdc ±5 mV at TP4–3.
4. Connect the oscilloscope to TP11–5 (MB–EX), adjust RV611 for 20 mVdc ±5 mV.
5. Apply a 100 Hz signal to left and right "FROM RECEIVER/TAPE OUTPUT" input jacks, and adjust the audio signal generator's output for 0 Vdc ±5 mV at TP4–4.
6. Connect the oscilloscope to TP11–7 (LB1–EX), adjust RV612 for 20 mVdc ±5 mV.
7. Apply a 30 Hz signal to both left and right "FROM RECEIVER/TAPE OUTPUT" input jacks, and adjust the audio signal generator's output for 0 Vdc ±5 mV at TP4–5.
8. Connect the oscilloscope to TP11–9 (LB2–EX), adjust RV614 for 20 mVdc ±5 mV.
9. Apply a 6 kHz signal to left and right "FROM RECEIVER/TAPE OUTPUT" input jacks, and adjust the audio signal generator's output for 0 Vdc ±5 mV at TP4–2.
10. Connect the oscilloscope to TP11–3 (HB1–EX), adjust RV608 for 20 mVdc ±5 mV.
11. Apply a 15 kHz signal to left and right "FROM RECEIVER/TAPE OUTPUT" input jacks, and adjust the audio signal generator's output for 0 Vdc ±5 mV at TP4–1.
12. Connect the oscilloscope to TP11–1 (HB2–EX), adjust RV606 for 20 mVdc ±5 mV.

● COMPRESSION ADJUSTMENT

1. Set the switches as follows:

   DEFEAT switch ..... In position
   SOURCE switch ..... In position
   PRE/POST switch ..... PRE position
   BYPASS switch ..... Out position

2. Short the pin1 and pin3 of TPs on the control P.C. Board.
3. Apply a 1 kHz signal to left and right "FROM RECEIVER/TAPE OUTPUT" input jacks, and adjust the audio signal generator's output for 0 Vdc ±5 mV at TP4–3.
4. Connect the oscilloscope to TP11–6 (MB–COP), adjust RV610 for –20 mVdc ±5 mV.
5. Apply a 100 Hz signal to left and right "FROM RECEIVER/TAPE OUTPUT" input jacks, and adjust the audio signal generator's output for 0 Vdc ±5 mV at TP4–4.
6. Set the unit to BYPASS mode, observe the "TAPE OUT" signal level (as a reference output level).
7. Reset to BYPASS OUT mode, increase the audio signal generator's output in 20 dB.
8. Adjust RV613 so that the output level at "TAPE OUT" is 1 dB greater than the reference output level.
9. Readjust the input signal generator to a frequency of 30 Hz, and repeat steps 6 and 7 for TP4–5 (LB2–COP) and adjust RV615 as in step 8.
10. Readjust the input signal generator to a frequency of 6 kHz, and repeat steps 6 and 7 for TP4–2 (HB1–COP) and adjust RV609 as in step 8.
11. Readjust the input signal generator to a frequency of 15 kHz, and repeat step 6 and 7 for TP4–1 (HB2–COP) and adjust RV607 as in step 8.
12. Repeat the steps 5 – 11.

ADJUSTMENT PROCEDURE

● UNITY GAIN ADJUSTMENT

1. Set the switches as follows:

   DEFEAT switch ..... In position
   SOURCE switch ..... In position
   PRE/POST switch ..... PRE position
   BYPASS switch ..... In position

2. Connect the signal generator to left and right "FROM RECEIVER/TAPE OUTPUT" input jacks.
3. Apply a 1 kHz and adjust signal generator's output for 1.0 V at "TO RECEIVER/TAPE INPUT" output jacks.
4. Adjust RV515 (MB) for left channel unity gain (output voltage should be 1.0 V ±0.1 dB).
5. Adjust RV315 (MB) for right channel unity gain.
6. Reset the signal generator to 100 Hz, 1.0 V.
7. Adjust RV517 (LB1, left) and RV317 (LB1, right) for 1.0 V ±0.1 dB.
8. Readjust the input signal generator to a frequency of 30 Hz, and adjust RV519 (LB2, left) and RV319 (LB2, right) as in step 4.
9. Readjust the input signal generator to a frequency of 6 kHz, and adjust RV513 (HB1, left) and RV313 (HB1, right) as in step 4.
10. Readjust the input signal generator to a frequency of 15 kHz, and adjust RV511 (HB2, left) and RV311 (HB2, right) as in step 4.

● LED LEVEL ADJUSTMENT

1. Set the switches as follows:

   DEFEAT switch ..... In position
   SOURCE switch ..... In position
   PRE/POST switch ..... PRE position
   BYPASS switch ..... Out position

2. Short the pin1 and pin4 of TPs on the control P.C. Board.
3. Connect the signal generator to left and right "FROM RECEIVER/TAPE OUTPUT" input jacks.
4. Apply a 1 kHz and adjust signal generator's output for 1.0 V at "TO RECEIVER/TAPE INPUT" output jacks, then adjust "VOLUME" on the front panel for 1.5 dB lower than the input signal level.
5. Adjust RV101 so that the 3 LEDs on the MB LED row light.

PERFORMANCE TESTS

● LED TEST

1. Set the switches as follows:

   DEFEAT switch ..... In position
   SOURCE switch ..... In position
   PRE/POST switch ..... PRE position
   BYPASS switch ..... Out position

2. Depress the power switch and verify that the POWER, DEFEAT, SOURCE, PRE LEDs and 4 red LEDs(−35, −28, −21, −14) on the "TRANSITION" LED row, all red LEDs on the "VOLUME" LED rows are illuminated.
3. Depress the tape switch and verify that the SOURCE LED is extinguished and TAPE LED lights.
4. Press the PRE/POST switch, verify the POST LED lights and PRE LED is extinguished.
5. Verify the BYPASS LED lights when the BYPASS switch is pressed.
6. Press the memory switches 1–5, verify that their respective LEDs light.
7. Verify the ENTER MEMORY LED lights, and MEMORY LED 1–5 are extinguised when ENTER MEMORY switch is pressed.
8. Press the AMOUNT switch, LED designated AMOUNT will light, all LEDs on the 5 LED rows of the dynamics display will light.
   Continuously press DOWN switch of a IMPACT BAND, verify that the LEDs on its band go off from +10 dB side, one at a time, in decending order.
   Press UP switch, LEDs go on up to +10 dB.
9. Press the GAIN CHANGE switch, verify the red LED designeted GAIN CHANGE lights, all LEDs of 5 bands on the INPACT side will be distinguished
10. Continuously press the UP switch of the TRANSITION, red LEDs light up in ascending order −7, 0, +7, press the DOWN switch of them, LEDs go off, in descending order +7, 0, −7 .... −35, after all the LEDs are distinguished, hit the UP switch once, the −35 LED begins to light.
11. Press the UP switch of the DYNAMICS , yellow LEDs on EXPAND LED row ???

● UNITY GAIN TEST

1. Set the switches as follows:

   DEFEAT switch ..... In position
   SOURCE switch ..... In position
   PRE/POST switch ..... PRE position
   BYPASS switch ..... Out position

2. Connect the audio signal generator to "FROM RECEIVER/TAPE OUTPUT" input jacks, the oscilloscope to "TO RECEIVER/TAPE INPUT"input jacks, and apply a 1 kHz (MB) 1.0 V sinewave.
3. Verify that the output voltage is 1.0 V ±0.5 dB.
4. Repeat the above test for the 100 Hz (LB1), 30 Hz (LB2), 6 kHz (HB1), 15 kHz (HB2).

PERFORMANCE TESTS

● FREQUENCY RESPONSE TEST

1. Set the switches as follows:

   DEFEAT switch ..... In position
   SOURCE switch ..... In position
   PRE/POST switch ..... PRE position
   BYPASS switch ..... Out position

2. Connect the oscilloscope to "TO RECEIVER/TAPE INPUT" output jacks, the audio signal generator to "FROM RECEIVER/TAPE OUTPUT" input jacks.
3. Apply a 1.0 V sinewave and sweep the input frequency from 20 Hz to 20 kHz.
4. Verify that the output voltage is 1.0 V ±0.5 dB over this frequency range.

● THD TEST

1. Set the switches as follows:

   DEFEAT switch ..... In position
   SOURCE switch ..... In position
   PRE/POST switch ..... PRE position
   BYPASS switch ..... Out position

2. Connect the oscilloscope and distortion meter to "TO RECEIVER/TAPE INPUT" output jacks, the audio signal generator to "FROM RECEIVER/TAPE OUTPUT" input jacks.
3. Set the input signal generator to frequencies of 100 Hz, 1 kHz, 10 kHz and adjust its output voltage for 3.16 V rms at "TO RECEIVER/TAPE INPUT" output jacks.
4. Verify that THD is less than 0.15 %.

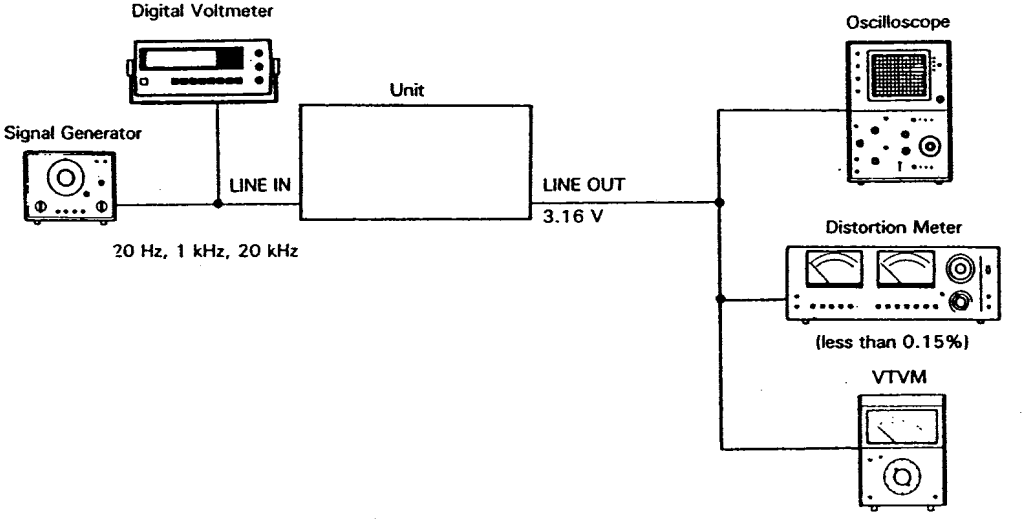

PERFORMANCE TESTS

● EXPANSION TEST

1. Set the switches as follows:

   DEFEAT switch ..... In position
   SOURCE switch ..... In position
   PRE/POST switch ..... PRE position
   BYPASS switch ..... Out position
   EXPAND ..... Max. position

2. Connect the the signal generator to left and right "FROM RECEIVER/TAPE OUTPUT" input jacks.
3. Connect the output of one channel to an AC voltmeter (digital voltmeter).
4. Set the signal generator to 1 kHz at −40 dB.
5. Adjust the "TRANSITION" level on the front panel for −40 dB at "TO RECEIVER/TAPE INPUT" output jacks.
6. Reduce the signal generator's output to −50 dB.
7. Verify that the "TO RECEIVER/TAPE INPUT" output level decreases to −65 dB ±1 dB.
8. Repeat for the other channel.
9. Repeat the steps 5 − 7, but use a 30 Hz for the LB2, a 100 Hz for the LB1, a 6 kHz for the HB1 and a 15 kHz for the HB2.

● COMPRESSION TEST

1. Set the switches as follows:

   DEFEAT switch ..... In position
   SOURCE switch ..... In position
   PRE/POST switch ..... PRE position
   BYPASS switch ..... Out position
   COMPRESS ..... Max. position

2. Connect the the signal generator to left and right "FROM RECEIVER/TAPE OUTPUT" input jacks.
3. Connect the output of one channel to an AC voltmeter (digital voltmeter).
4. Set the signal generator to a 1 kHz at 220 mV.
5. Adjust the "TRANSITION" level control for 220 mV at "TO RECEIVER/TAPE INPUT" output jacks.
6. Increase the signal generator's output in 20 dB.
7. Verify that the "TO RECEIVER/TAPE INPUT" output level increases ±1.5 dB from the "BYPASS IN"
8. Repeat for the other channel.
9. Repeat the steps 5 − 7, but use a 30 Hz for the LB2, a 100 Hz for the LB1, a 6 kHz for the HB1 and a 15 kHz for the HB2.

PERFORMANCE TESTS

● IMPACT RESTORATION TEST

1. Set the switches as follows:

   DEFEAT switch ..... In position
   SOURCE switch ..... In position
   PRE/POST switch ..... PRE position
   BYPASS switch ..... Out position
   IMPACT LEVEL ..... Max. position

2. Connect the toneburst generator output to "FROM RECEIVER/TAPE OUTPUT" input jacks.
3. Apply a 0.3 V, 1 kHz toneburst of approximately a 50-ms(10 cycles) on and a 500-ms(100 cycles) off.
4. Observe the wave shape at the output on one channel of "TO RECEIVER/TAPE INPUT" output jacks and verify that the wave shape is substantially as shown below.

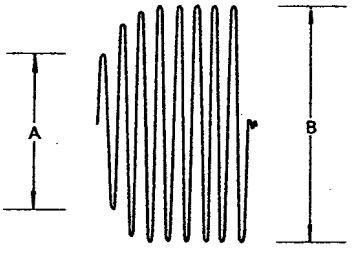

$\frac{B}{A}$ = 9 dB±2 dB

5. Repeat for the other channel.
6. Observe that the "IMPACT" LED row lights at least 6 out of the 7 LEDs.
7. Repeat above steps for 30 Hz, 100 Hz, 6 kHz and 10 kHz.

● SIGNAL PATH TEST

1. Set the switches as follows:

   DEFEAT switch ..... In position
   SOURCE switch ..... In position
   PRE/POST switch ..... PRE position
   BYPASS switch ..... Out position
   IMPACT LEVEL ..... Max. position

2. Connect the toneburst generator to "FROM RECEIVER/TAPE OUTPUT" input jacks, an audio signal generator to "FROM TAPE REC OUTPUT" input jacks, apply a 1.0 V, 1 kHz.
3. Monitor the output wave shape at both "TO RECEIVER/TAPE INPUT" output jacks and "FROM TAPE REC OUTPUT" output jacks, verify that it is a varied wave shape of toneburst.
4. Press the "BYPASS" switch and verify that the output wave shape at both "TO RECEIVER/TAPE INPUT" output jacks and "TO TAPE REC INPUT" output jacks is the 1 kHz which is applied to "FROM RECEIVER/TAPE OUTPUT" input jacks.
   Verify that all LEDs of "IMPACT" are extinguished.
5. Press the "TAPE" switch.

6. Verify the output wave shape at "TO RECEIVER/TAPE INPUT" output jacks is a 1 kHz signal and at "TO TAPE REC INPUT" output jacks is a toneburst signal.
7. Release the "BYPASS" switch and verify the wave shape at both "TO RECEIVER/TAPE INPUT" output jacks and "TO TAPE REC INPUT" output jacks. One is a 1 kHz signal and another is of a varied toneburst signal.
8. Press the "POST" switch and verify that the wave shape as monitored at both "TO RECEIVER/TAPE INPUT" output jacks and "TO TAPE REC INPUT" output jacks remains unchanged toneburst.

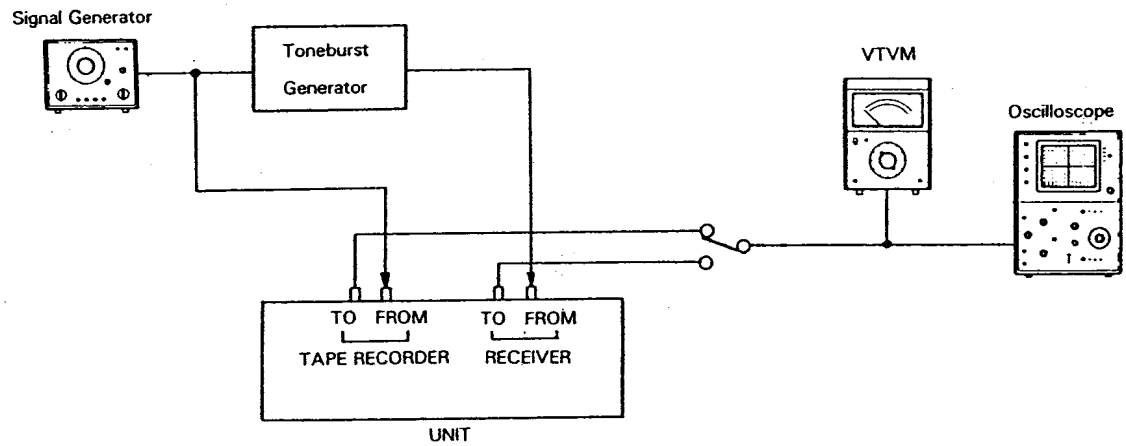

● TRANSITION LEVEL TEST

1. Set the switches as follows:

DEFEAT switch	In position
SOURCE switch	In position
PRE/POST switch	PRE position
BYPASS switch	Out position
EXPAND	Max. position

2. Connect the signal generator to "FROM RECEIVER/TAPE OUTPUT" input jacks.
3. Connect the oscilloscope to one channel of "TO RECEIVER/TAPE INPUT" output jacks.
4. Set the input signal generator to a frequency of 1 kHz and an output magnitude of 2
5. Change the "TRANSITION" level on the front panel from minimum to its maximum positi
6. Verify that the output magnitude changes of 10 dB ±3 dB.
7. Repeat for the right channel and for the following frequencies.

30 Hz, 100 Hz, 6 kHz	10 dB ±3 dB
15 kHz	8 dB ±3 dB

PERFORMANCE TESTS

● MAXIMUM OUTPUT LEVEL TEST

1. Set the switches as follows:

   DEFEAT switch ..... In position
   SOURCE switch ..... In position
   PRE/POST switch ..... PRE position
   BYPASS switch ..... Out position

2. Apply a 1 kHz sinewave to "FROM RECEIVER/TAPE OUTPUT" input jacks.
3. Verify that the output voltage is greater than approximately 5.0 V rms at 1 % THD.
3. Repeat for the 100 Hz and 10 kHz.

● NOISE TEST

1. Set the switches as follows:

   DEFEAT switch ..... In position
   SOURCE switch ..... In position
   PRE/POST switch ..... PRE position
   BYPASS switch ..... Out position

2. Terminate the "FROM RECEIVER/TAPE OUTPUT" input jacks and "FROM TAPE REC OUTPUT" input jacks with 1 k-ohm resistor in parallel with 1000 pF to ground.
3. Verify that the noise level is less than -85 dBV.(with DIN audio filter)

ADJUSTMENT LOCATION

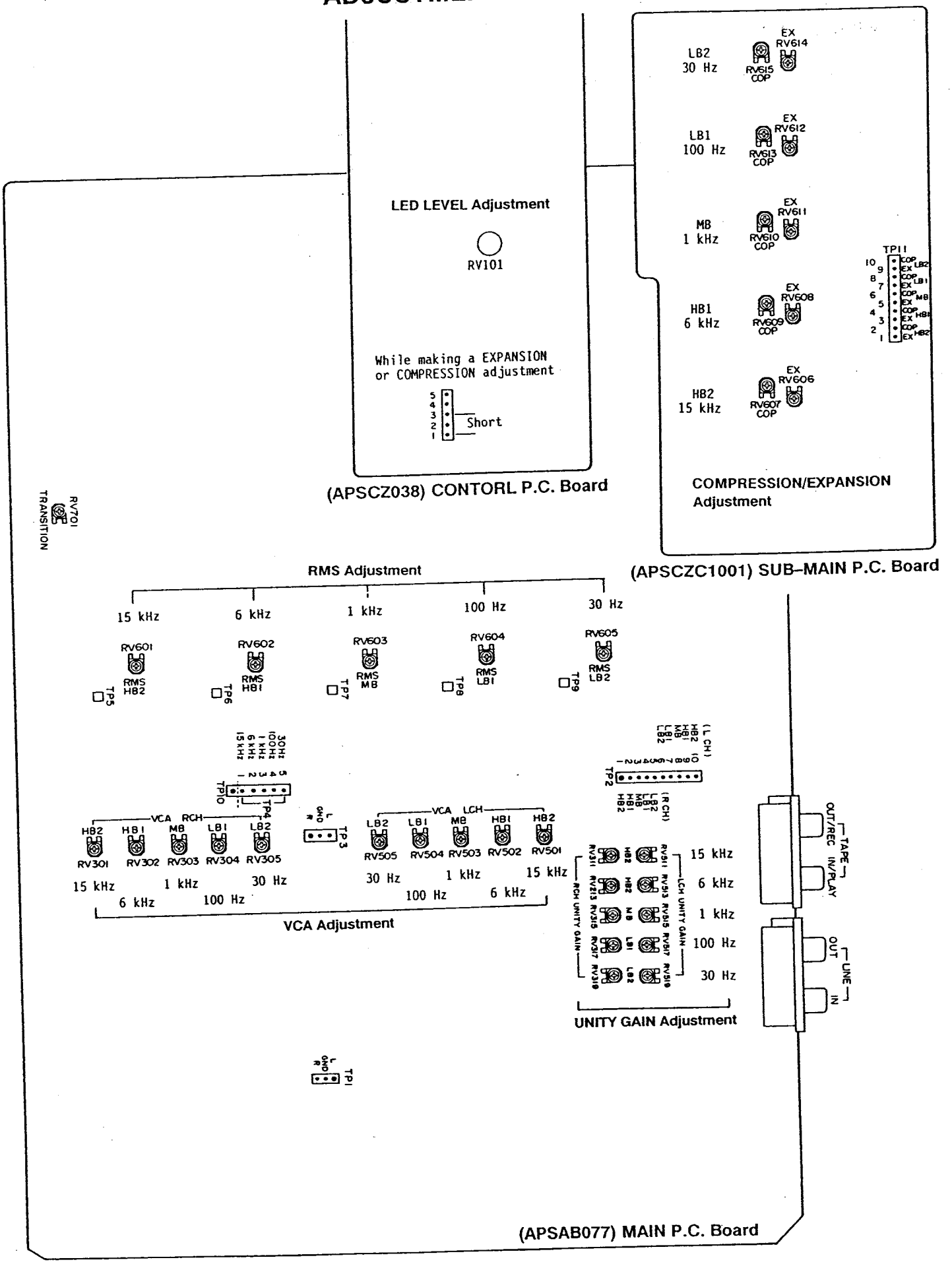

BLOCK DIAGRAM

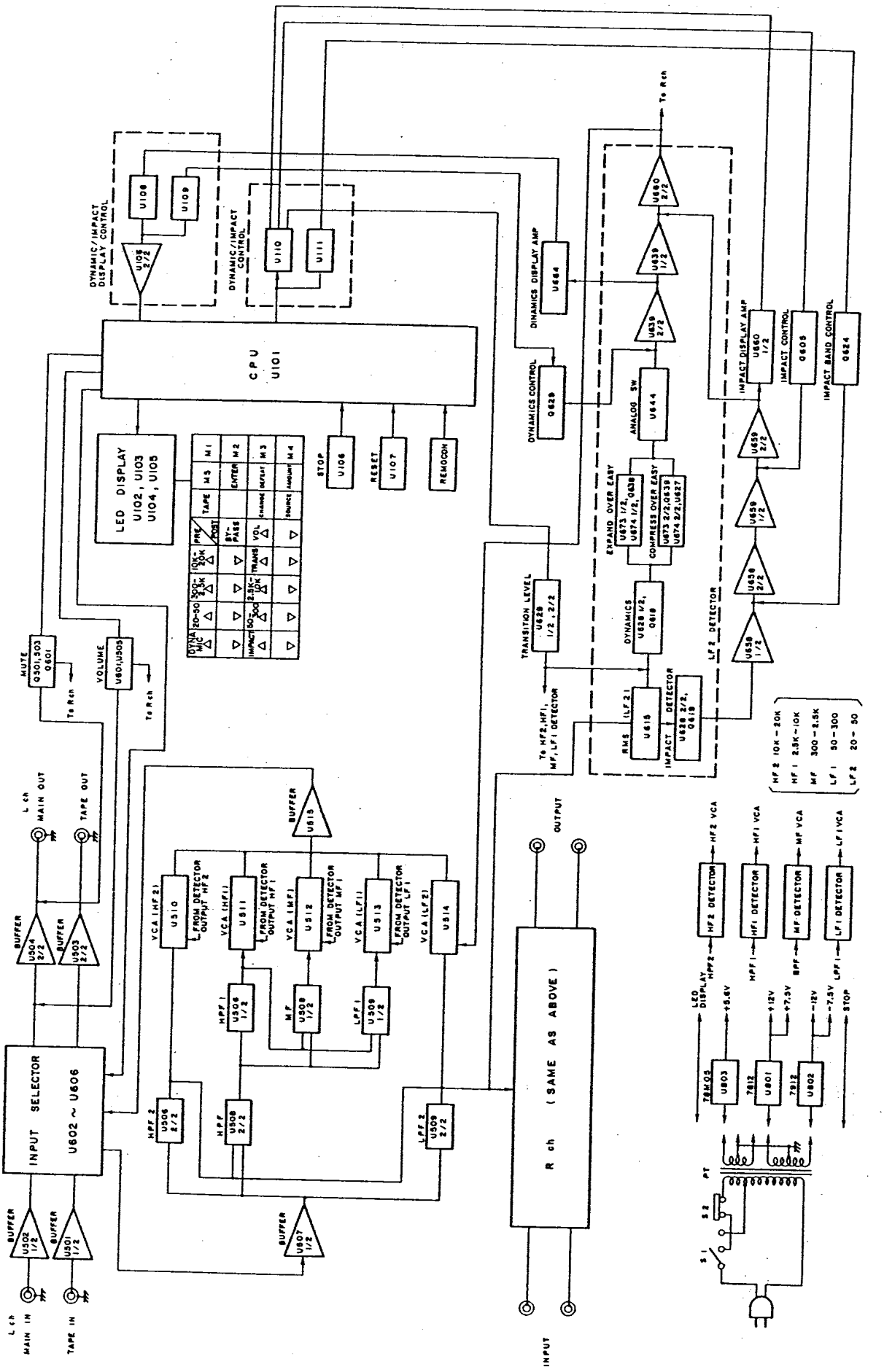

WIRING LAYOUT

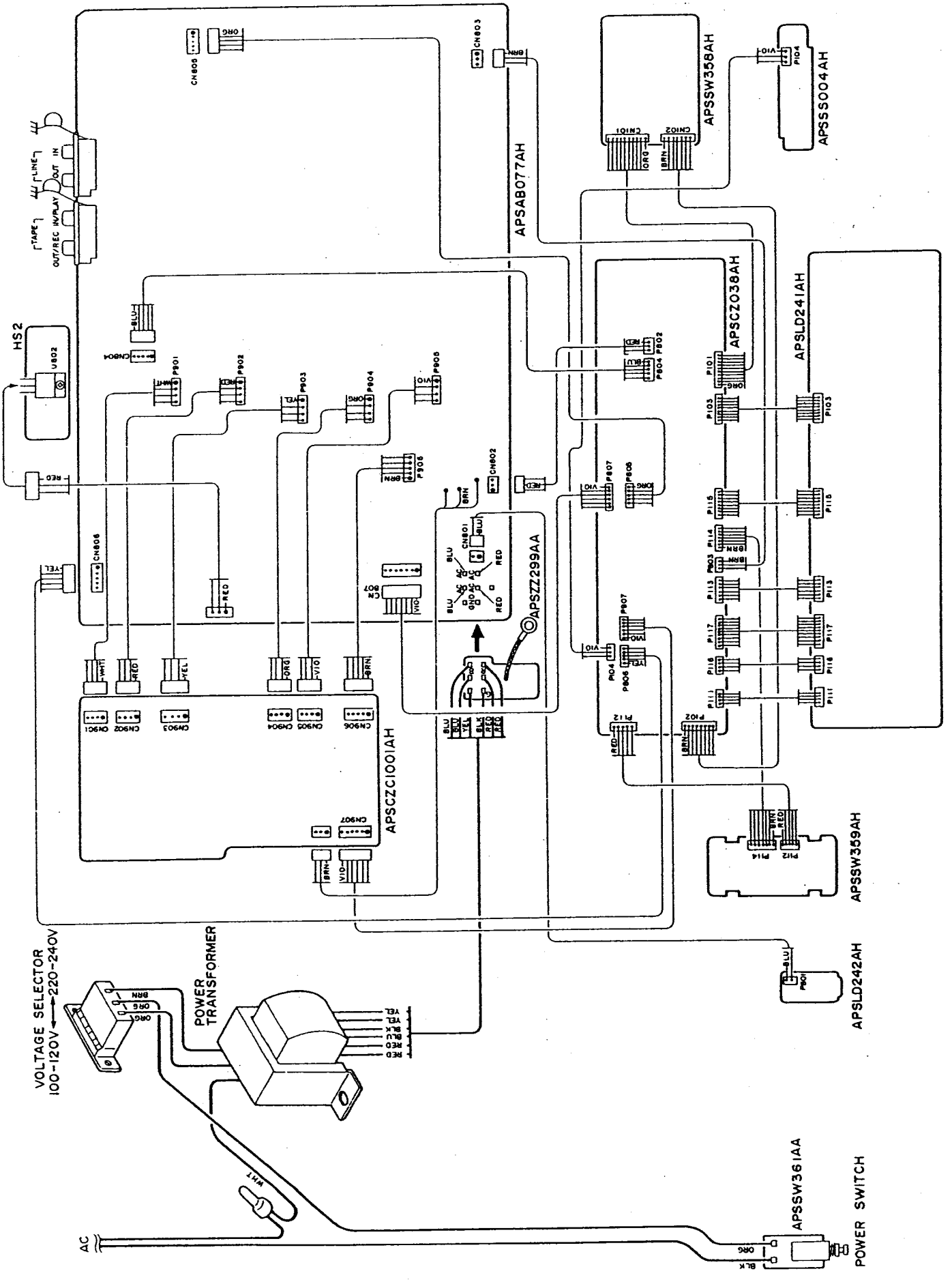

WIRING BOARD LAYOUT (1)

Component side view

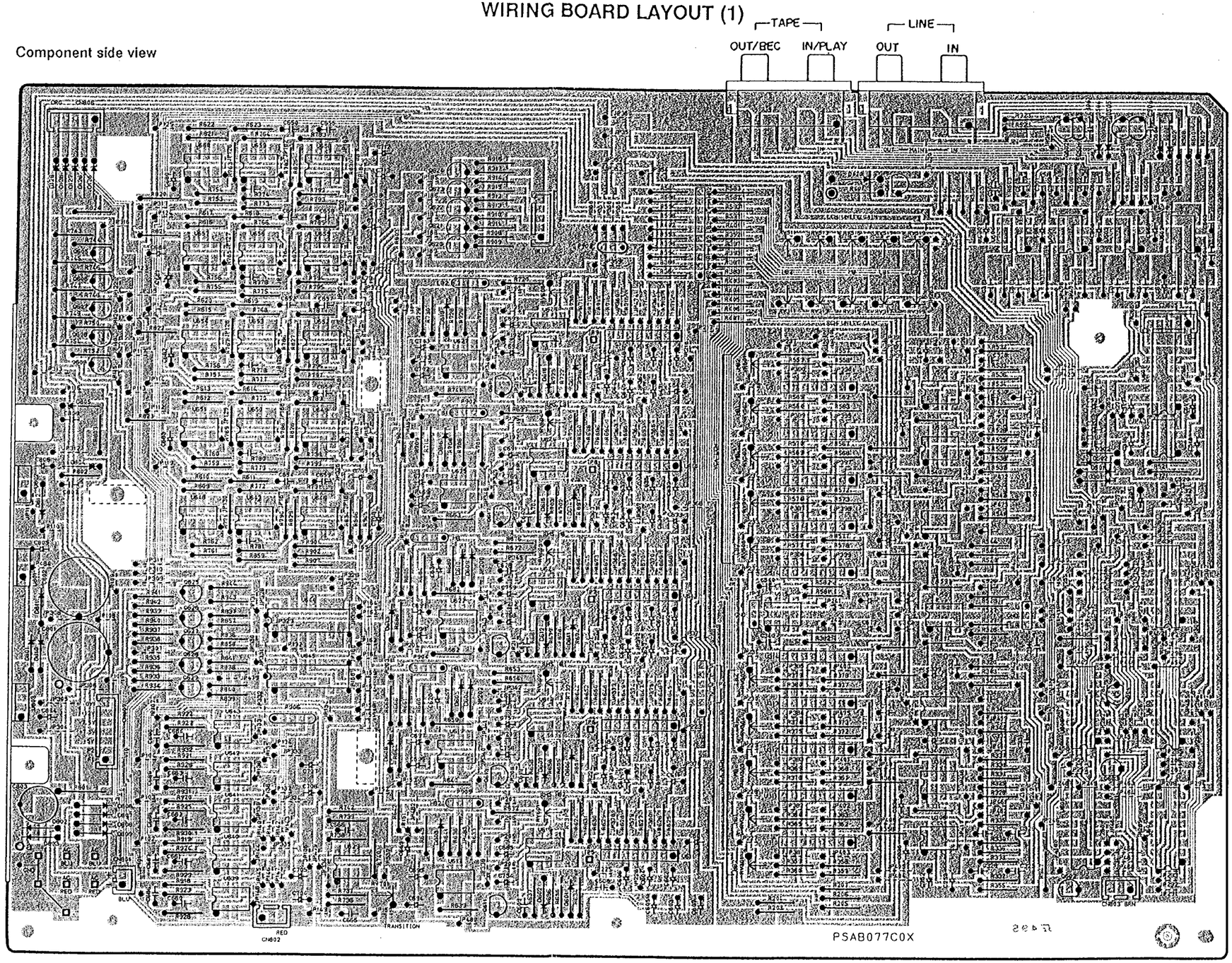

(AP1) APSAB077AH

WIRING BOARD LAYOUT (2)

Foil side view

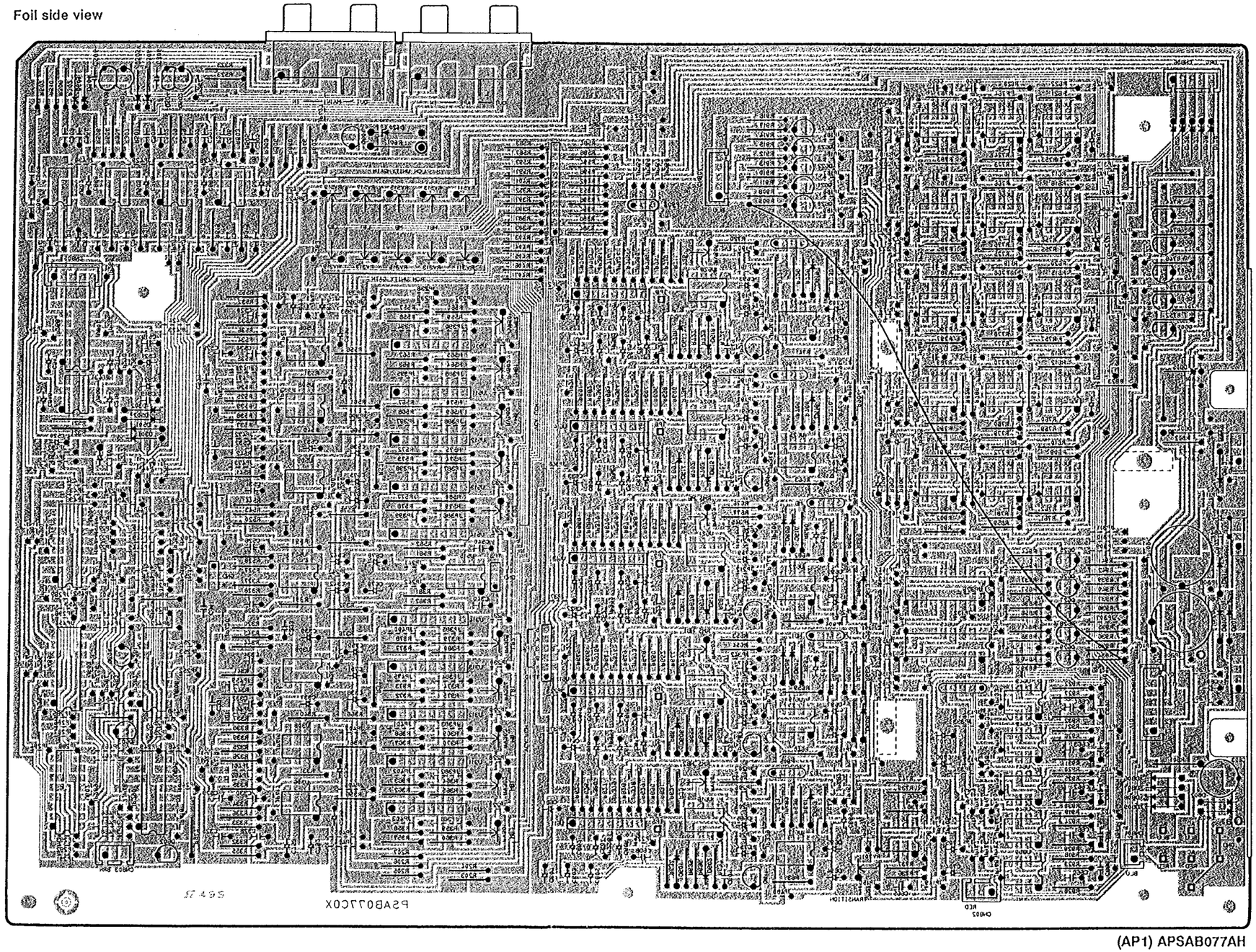

(AP1) APSAB077AH

WIRING BOARD LAYOUT (3)

Component side view

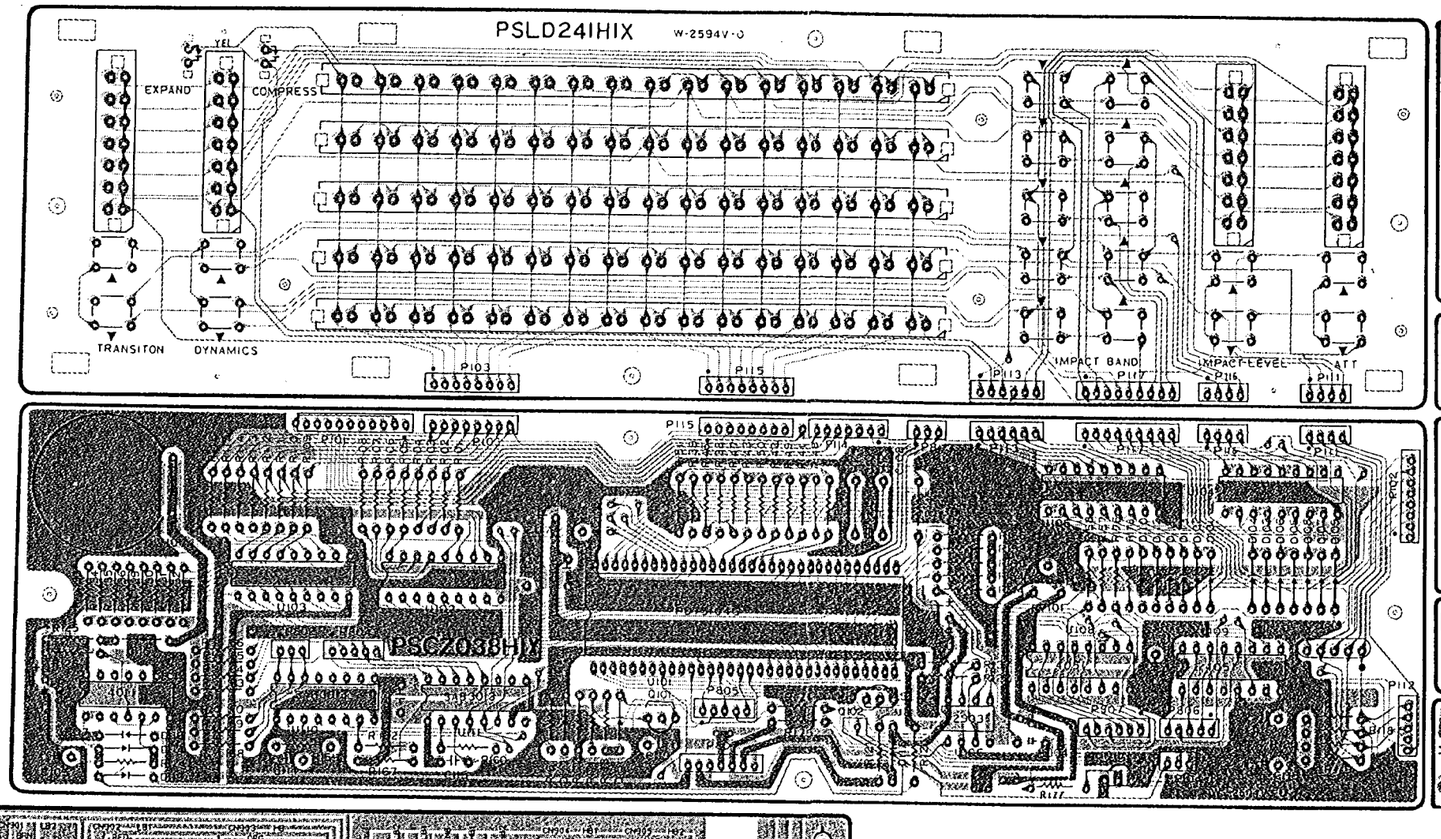

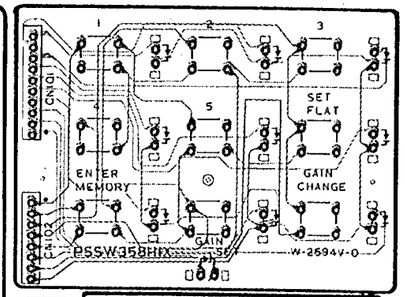

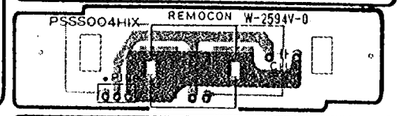

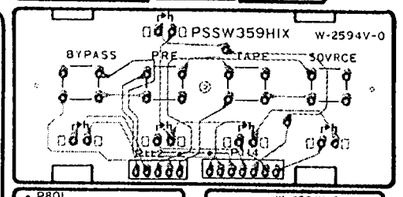

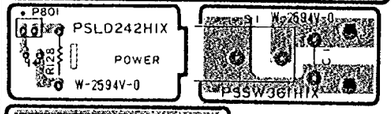

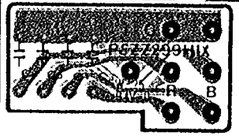

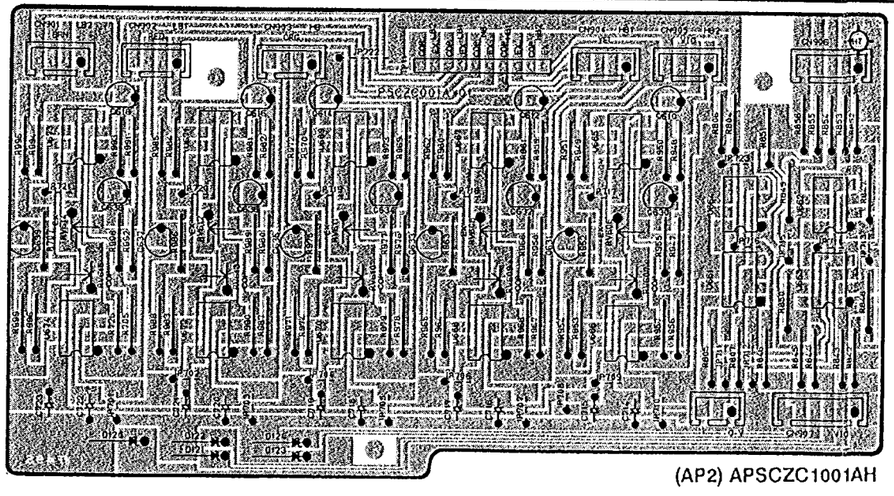

(AP2) APSCZC1001AH

(AP3) APSLD241AH

(AP4) APSCZ038AH

(AP5) APSSW358AH

(AP6) APSSS004AH

(AP7) APSSW359AH

(AP8) APSLD242AH

(AP9) APSSW361AA

(AP10) APSZZ299AA

WIRING BOARD LAYOUT (4)

Foil side view

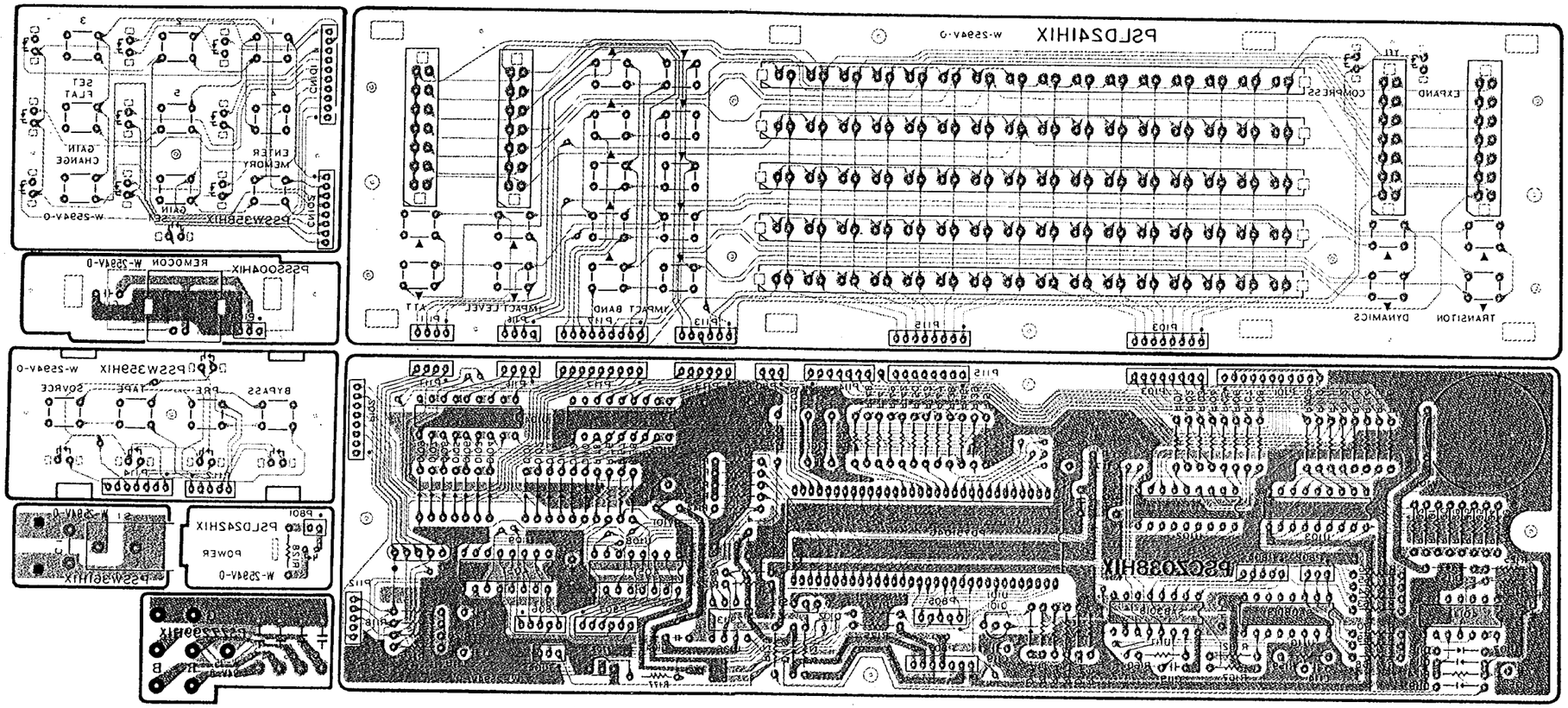

(AP5) APSSW358AH

(AP6) APSSS004AH

(AP7) APSSW359AH

(AP9) APSSW361AA

(AP8) APSLD242AH

(AP10) APSZZ299AA

(AP3) APSLD241AH

(AP4) APSCZ038AH

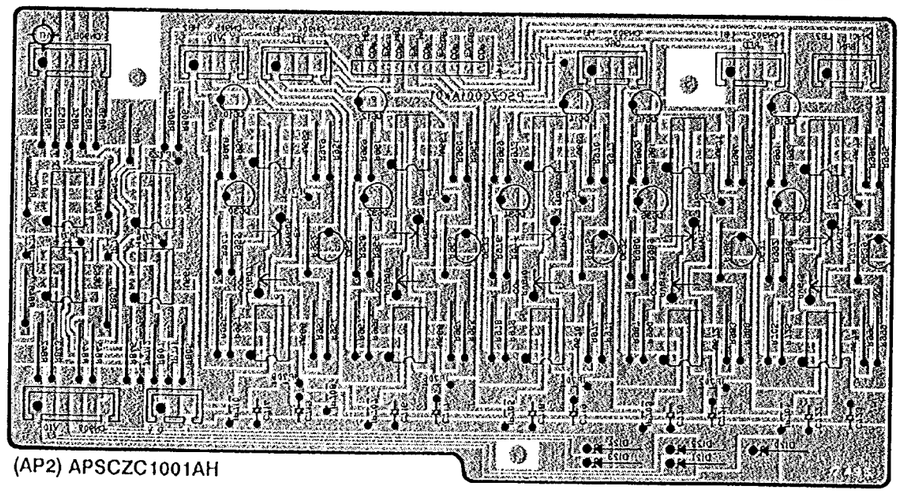

(AP2) APSCZC1001AH

SCHEMATIC DIAGRAM (1)

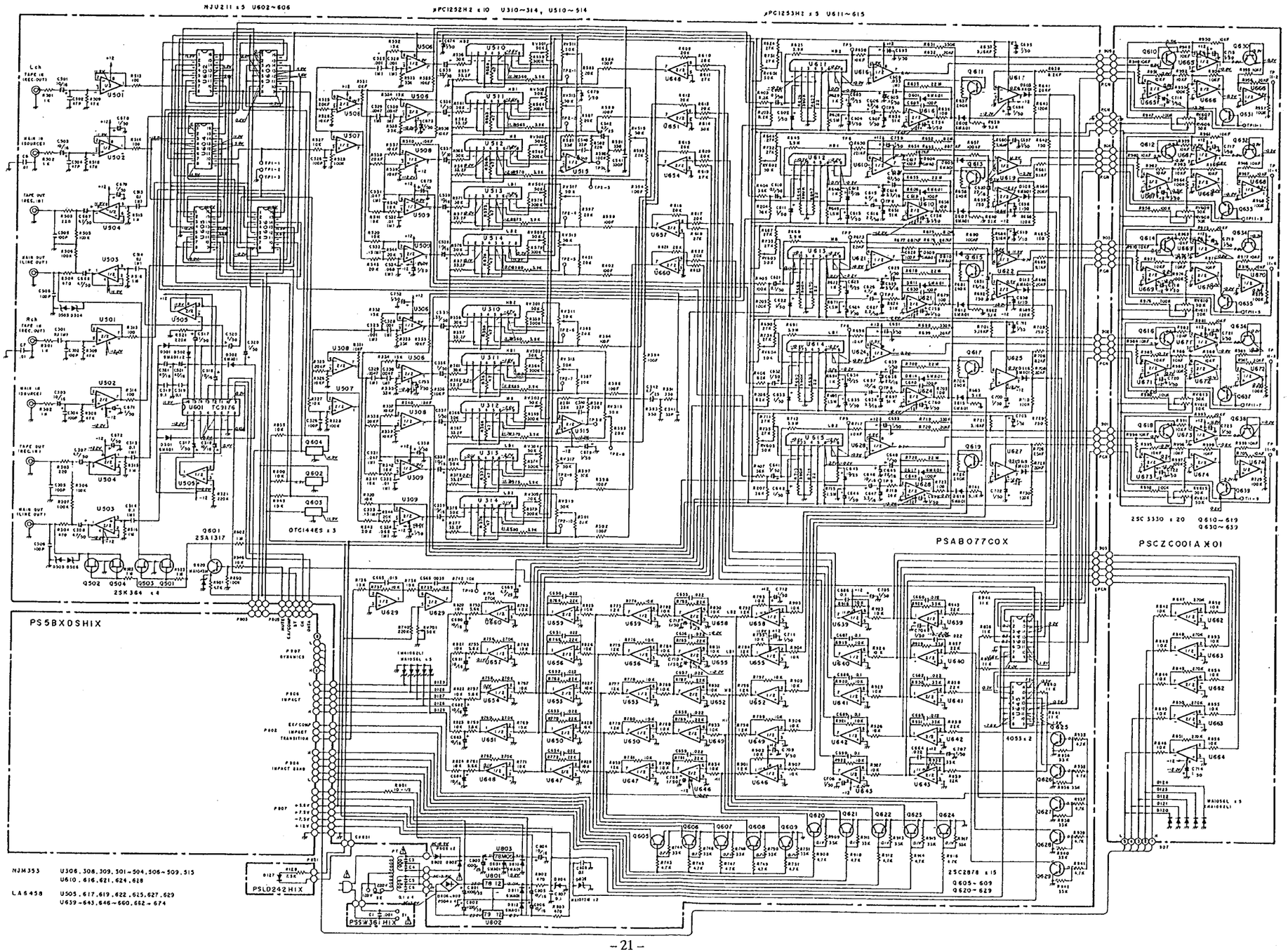

SCHEMATIC DIAGRAM (2)

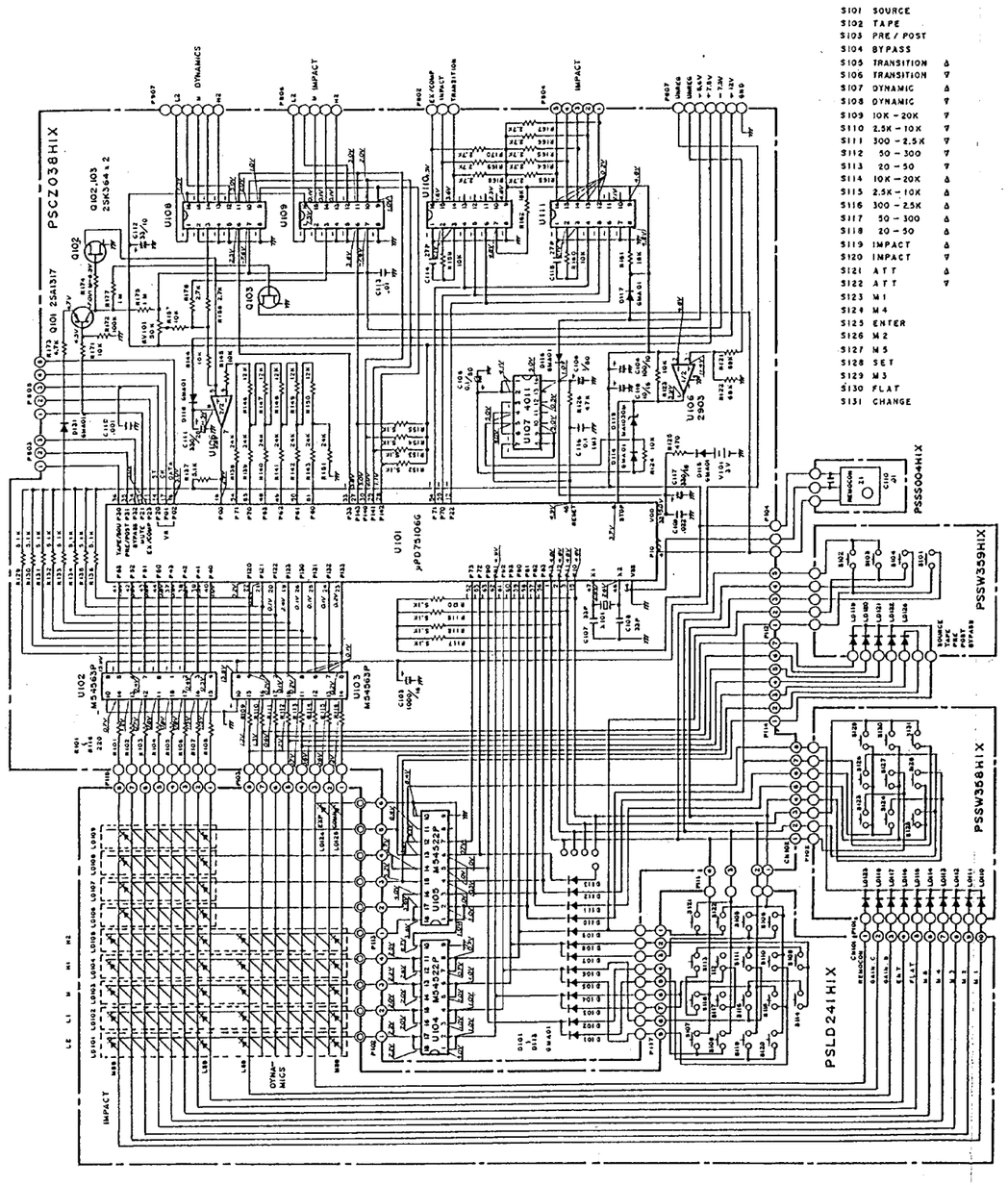

EXPLODED VIEW

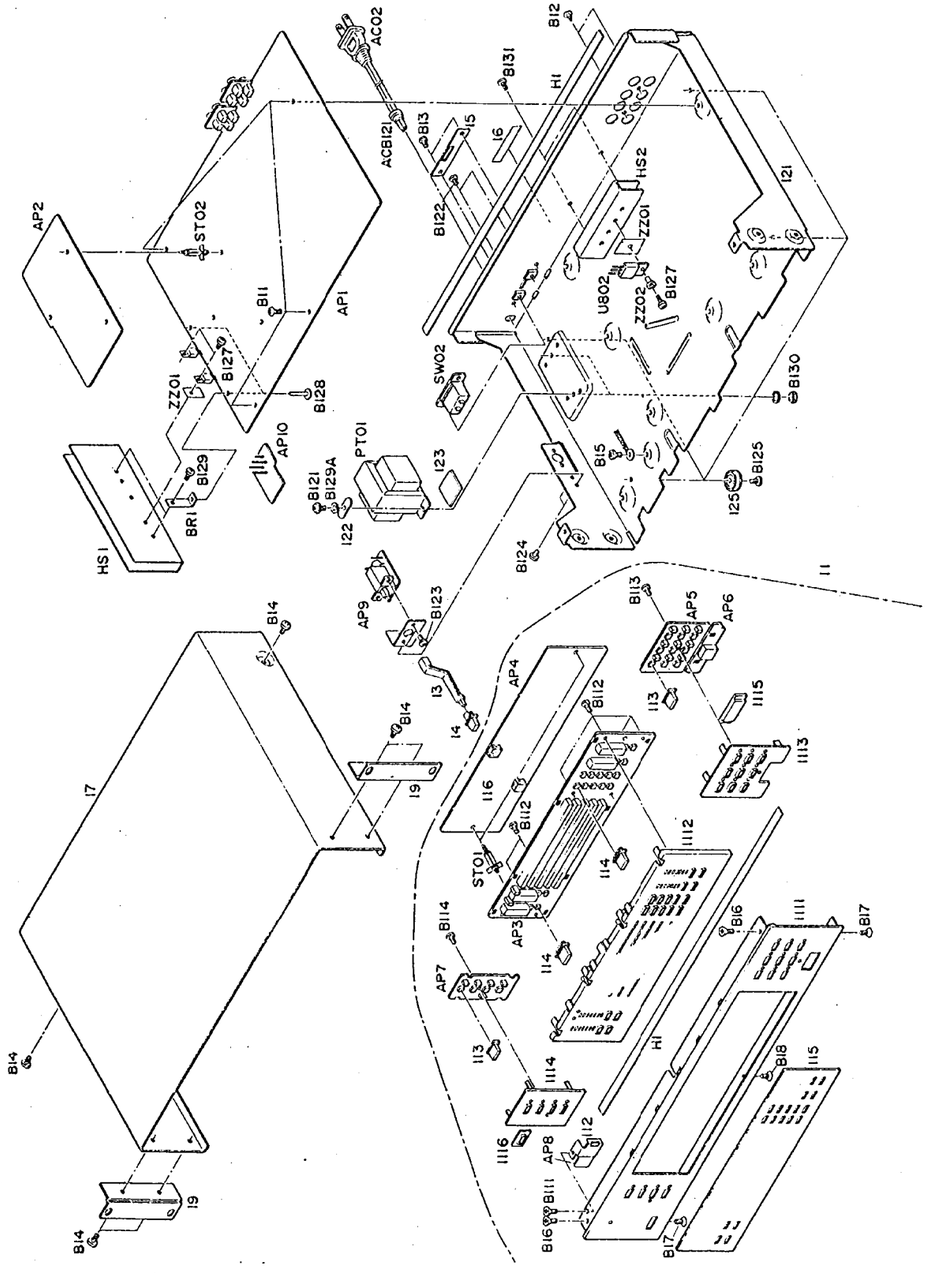

REPLACEMENT PARTS LIST

Table of Part Structure

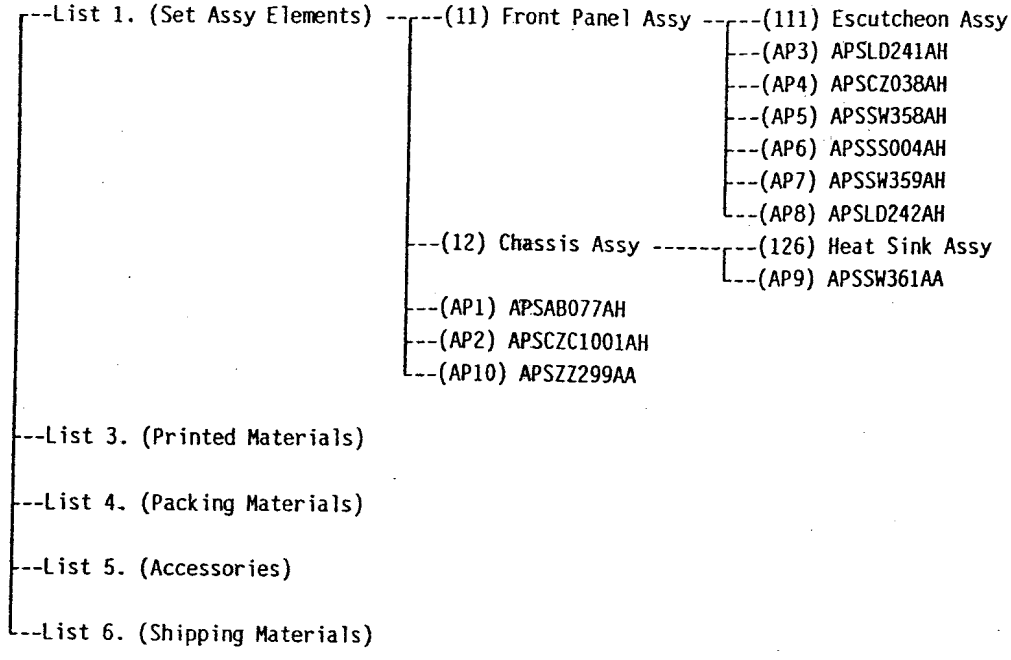

LIST 1. SET ASSY ELEMENTS

Numbers with ( ) listed in Ref.No. has exploded details.

Ref.No.	MFR's Part No.	Description	Remarks
(11)	AY5BXDSP01	Front Assy	
(12)	AY5BXDSP02	Chassis Assy	
(AP1)	APSA8077AH	P.W. Board Assy	
(AP2)	APSCZC1001AH	P.W. Board Assy	
(AP10)	APSZZ299AA	P.W. Board Assy	
13	VQ611SB006	Joint Switch	
14	VN220SB023	Push Button	
15	MS625AA002	Cover Switch	
16	VVL511GE30	Ser. No. Label	
17	MU896SX011	Cover	
18	VVL221WN14	Caution Label	
19	ML633AA001	Rack Mount	
B11,15	BTPW3008BZ	Bras Tap Screw M3 x 8	
B12	BTPW3008AB	Bras Tap Screw M3 x 8	
B13	BTPB3006TB	Bind T.T Screw M3 x 6	
B14	BTPB4010TB	Bind T.T Screw M4 x 10	
B16,17	BTPS3006TB	Flat T.T Screw M3 x 6	
B18	BTPS3008TB	Flat T.T Screw M3 x 8	

-1/1

REPLACEMENT PARTS LIST

11. Front Assy

Numbers with ( ) listed in Ref.No. has exploded details.

Ref.No.	MFR's Part No.	Description	Remarks
(111)	AM5BXDSP01	Escutcheon Assy	
(AP3)	APSLD241AH	P.W. Board Assy	
(AP4)	APSCZ038AH	P.W. Board Assy	
(AP5)	APSSW358AH	P.W. Board Assy	
(AP6)	APSSS004AH	P.W. Board Assy	
(AP7)	APSSW359AH	P.W. Board Assy	
(AP8)	APSLD242AH	P.W. Board Assy	
112	ML332SL002	PWB Bracket	
113	VK220SP001	Button Tact A	
114	VK221SB007	Button Tact B	
115	VS866CF001	Display Plate	
116	VQ222RF004	Sponge PWB	
B111	BSPS3006N8	Flat Head Screw M3 x 6	
B112,113,114	BTPB2608PZ	Bind T.T Screw M3 x 8	

-1/1

12. Chassis Assy

Numbers with ( ) listed in Ref.No. has exploded details.

Ref.No.	MFR's Part No.	Description	Remarks
(126)	AY5BXDSP03	Heat Sink Assy	
(AP9)	APSSW361AA	P.W. Board Assy	
121	MB986SK052	Chassis	
122	MS317SZ006	Plate	
123	VS337FF001	Sheet (Transformer)	
124	ML333SL005	Bracket (Power Switch)	
125	VM174SB001	Foot	
AC02	ACAC029ULA	AC Cord Assy	
ACB121	VM270NB001	Bushing	
B121	BTP44010TZ	TP T.T Screw M4 x 10	
B122,123,124,125	BTPB3006TZ	Bind T.T Screw M3 x 6	
B126	BTPS3006TZ	Flat T.T Screw M3 x 6	
B129A	BWK40A0ASZ	Flat S Washer M4 x 10	
B130	BNCXX40NSZ	Spring Nut M4 x 0.7	
B131	BTPB3008PB	Bind T.T Screw M3 x 8	
PT01	TPV0601208*01	Power Transformer	
SC1	YTJ0102****01	Solderless Connection	
SW02	SS010236***01	Slide Switch	
W1	WU3032DDXX*09	Hi-Wrap Wire	

-1/1

REPLACEMENT PARTS LIST

111. Ecutcheon Assy

Ref.No.	MFR's Part No.	Description	Remarks
1111	ME96EAA128	Escutcheon	
1112	VB863SB004	Frame	
1113	VF663SB001	Button Frame R	
1114	VF643SB001	Button Frame L	
1115	VS428AS005	Plate RC	
1116	VF122SB004	Button Guide	

-1/1

126. Heat Sink Assy

Ref.No.	MFR's Part No.	Description	Remarks
B127	BTPB3010WZ	Bind T.T Screw M3 x 10	
ZZ01	VS223RH002	Silicon Sheet	
ZZ02	VF164DN003	Bushing	
HS2	MU732AD001	Heat Sink	
U802	UAS7912A***J1	IC NJM7912A	

-1/1

AP1. P.W. Board Assy (APSAB077AH)

Ref.No.	MFR's Part No.	Description	Remarks
	PSAB077C0X	P.W. Board (without parts)	
B127,129	BTPB3010WZ	Bind T.T Screw M3 x 10	
B128	BRU3280XAJ	Thin Head Rivet M3.2 x 8.0	
BR1	ML131SL001	Bracket (Heat Sink)	
C7,8	CKR1H103F0101	Ceramic 0.01 uF 50 V +/-1%	
C301,303,318,338	CEC1C10001*01	Electrolytic 10 uF 16 V	
339,501,503,518			
538,539,637,646			
680,681,682,683			
684,804,805,806			
C302,304,305,306	CCC1H10100102	Ceramic 100 pF 50 V +/-5%	
326,502,504,505			
506,526,609,617			
619,628,630,640			
649			
C307,308	CEC1H4R701*01	Electrolytic 4.7 uF 50 V	
C313,314,513,514	CFTC1H1040201	Film 0.1 uF 50 V +/-5%	
686,687,688,689			

-1/7

REPLACEMENT PARTS LIST

A=Serial No. ***00001 - 01000, B=Serial No. from ***01001

Ref.No.	MFR's Part No.	Description	Remarks
690,807,808	CFTC1H1040201	Film 0.1 uF 50 V +/-5%	
C317,320,336,337	CEC1H01001*01	Electrolytic 1 uF 50 V	
517,520,536,537			
602,604,607,611			
613,622,624,632			
633,635,639,641			
C319,519	CBR1H10401*03	Ceramic 0.1 uF 50 V +80%,-20%	
C321,521	CEC1C47001*01	Electrolytic 47 uF 16 V	
C325,328,525,528	CFEC1H1020201	Film 1000 pF 50 V +/-5%	
C329,330,529,530	CFEC1H4720201	Film 4700 pF 50 V +/-5%	
C331,531	CFTC1H4730201	Film 0.047 uF 50 V +/-5%	
C332,532	CFEC1H1030201	Film 0.01 uF 50 V +/-5%	
C333,533	CFTC1H1540201	Film 0.15 uF 50 V +/-5%	
C334,534	CFTC1H6830201	Film 0.068 uF 50 V +/-5%	
C335,535	CEC1HR3301*01	Electrolytic 0.33 uF 50 V +/-20%	
C340,540	CCC1H33000102	Ceramic 33 pF 50 V +/-5%	
C341,541	CCR1H33100101	Ceramic 330 pF 50 V +/-10%	
C342,542	CEC1E4R702*06	Electrolytic 4.7 uF 25 V +/-20%	
C601,610,618,621	CEC1H0R105*01	Electrolytic 0.1 uF 50 V +/-20%	
629			
C603,612,623,634	CEC1E10001*01	Electrolytic 10 uF 25 V	
643			
C605	CEC1HR4701*01	Electrolytic 0.47 uF 50 V	
C606,615,626	CEC1E4R705*01	Electrolytic 4.7 uF 25 V +/-20%	
C608	CFEC1H3330201	Film 0.033 uF 50 V +/-5%	
C614,625,638,647	CEC1E3R301*01	Electrolytic 4.7 uF 25V	
C616,627	CEC1E2R201*01	Electrolytic 2.2 uF 25 V +/-20%	A
C616,627	CEC1H2R201*01	Electrolytic 2.2 uF 50 V +/-20%	B
C620,631,636,645	CEC1C22001*01	Electrolytic 22 uF 16 V	
C642,644,648,670	CEC1H01001*01	Electrolytic 1 uF 50 V	A
671,677,678,679			
685,691,692,693			
694,695,696,697			
698,699,700,701			
702,703,704,705			
706,707,708,709			
710,711,712,713			
750,751,752,753			
754,756,757,758			
759			
C673,674,675,760	CEC1H01001*01	Electrolytic 1 uF 50 V	B
C650,651,652,653	CFEC1H2230201	Film 0.022 uF 50 V +/-5%	
654,655,656,657			
658,659,660,661			
662,663,664			
C665	CFEC1H1530201	Film 0.015 uF 50 V +/-5%	
C666	CKR1H392B0103	Ceramic 3900 pF 50 V +/-20%	
C667,668,669	CEC1E4R701*01	Electrolytic 4.7 uF 25 V	
C801,802	CER1V10201*01	Electrolytic 1000 uF 35 V	
C803	CER1C10201*01	Electrolytic 1000 uF 16 V	
CN801	YCS02C102**02	Junction Jack	

-2/7

REPLACEMENT PARTS LIST

A=Serial No. ***00001 - 01000, B=Serial No. from ***01001

Ref.No.	MFR's Part No.	Description	Remarks
CN802,803	YCS03C102**02	Junction Jack	
CN804,805,806	YCS05C102**02	Junction Jack	
CN807	YCS07C102**02	Junction Jack	
D125,126,127,128 129	DZMA1056L**02	Diode (zener) MA1056L	A
D125,126,127,128 129	DZMA1062L**02	Diode (zener) MA1062L	B
D301,302,501,502 601,602,603,604 605,606	DDGMA01****01	Diode GMA-01	
D503,504,505,506	DZMA1150M**02	Diode (zener) MA1150M	
D607,608,609,610 611,612,613,614 615,616,617,618 619,801	DDGMA01****01	Diode GMA-01	
D620	DZMA1043M**02	Diode (zener) MA1043M	
D802,803,806,807 808,809,810,811 812	DDMPG06G***01	Diode MPG06G	
D804,805	DZMA1075M**02	Diode (zener) MA1075M	
HS1	MU762AD001	Heat Sink	
J701,702	YJP0404****02	4P Jack	
P808	ACCNBJ0ULA	Connection Cord Assy	
P901	ACCNBM5ULA	Connection Cord Assy	
P902	ACCNBM6ULA	Connection Cord Assy	
P903	ACCNBM7ULA	Connection Cord Assy	
P904	ACCNBM8ULA	Connection Cord Assy	
P905	ACCNBM9ULA	Connection Cord Assy	
P906	ACCNBN0ULA	Connection Cord Assy	
P908	ACCNBN1ULA	Connection Cord Assy	
Q501,502	QT2SK364***04	Transistor 2SK364 (BL,GR)	
Q503,504	QT2SK364***03	Transistor 2SK364 (BL,GR)	
Q601	QT2SA1317**02	Transistor 2SA1317 (S,T)	
Q602,603,604	QTDTC144ES*01	IC DTC144ES	
Q605,606,607,608 609,620,621,622 623,624,625,626 627,628,629	QT2SC2878**02	Transistor 2SC2878 (B)	
Q611,613,615,617 619	QT2SC3330**02	Transistor 2SC3330 (S,T)	
R203,403	RDA2E82201*01	Carbon 1/4W 8.2K ohm +/-5%	
R204,207,404,407	RDA2E36301*01	Carbon 1/4W 36K ohm +/-5%	
R205,306,307,328 392,405,505,506 528,592,860	RDA2E10401*01	Carbon 1/4W 100K ohm +/-5%	

-3/7-

REPLACEMENT PARTS LIST

Ref.No.	MFR's Part No.	Description			Remarks
R206,406	RDA2E62301*01	Carbon	1/4W	62K ohm +/-5%	
R301,302,501,502	RDA2E10201*01	Carbon	1/4W	1K ohm +/-5%	
629,648,672,694					
716					
R303,382,503,582	RDA2E22101*01	Carbon	1/4W	220 ohm +/-5%	
R304,504,802,803	RDA2E47101*01	Carbon	1/4W	470 ohm +/-5%	
R308,309,509,510	RDA2E47301*01	Carbon	1/4W	47K ohm +/-5%	
R313,314,513,514	RDA2E10101*01	Carbon	1/4W	100 ohm +/-5%	
636,656,679,703					
723					
R315,316,323,515	RDA2E10501*01	Carbon	1/4W	1M ohm +/-5%	
516,523,602					
R320,326,331,336	RJA2E10020101	Metal-oxide	1/4W	10K ohm +/-1%	
337,339,340,355					
520,526,531,536					
537,539,540,555					
630,696,717					
R321,521,740	RDA2E22401*01	Carbon	1/4W	220K ohm +/-5%	
R325,338,525,538	RJA2E20020101	Metal-oxide	1/4W	20K ohm +/-5%	
632,641,664,686					
699,708,720,728					
R327,527,736,737	RDA2E10301*01	Carbon	1/4W	10K ohm +/-5%	
738,742,763,765					
767,769,771,774					
776,778,780,781					
782,784,786,788					
790,793,795,797					
799,800,820,821					
822,823					
R332,334,532,534	RDA2E15301*01	Carbon	1/4W	15K ohm +/-5%	
R333,335,381,533	RDA2E33301*01	Carbon	1/4W	3K ohm +/-5%	
535,581,744,746					
748,750,752,909					
911,913,915,917					
928,929,930,931					
932,934,936,938					
940,942					
R341,342,541,542	RDA2E18301*01	Carbon	1/4W	18K ohm +/-5%	
739					
R343,344,352,383	RDA2E20301*01	Carbon	1/4W	20K ohm +/-5%	
387,393,397,401					
543,544,583,587					
593,597,609,610					
612,613,615,616					
617,620,621,622					
R353,384,388,394	RJA2E10000101	Metal-oxide	1/4W	100 ohm +/-1%	
398,402,584,588					
594,598					
R356,361,366,371	RDA2E30301*01	Carbon	1/4W	30K ohm +/-5%	
376,556,561,566					
571,576,614					

-4/7-

REPLACEMENT PARTS LIST

Ref.No.	MFR's Part No.	Description	Remarks
R357,362,367,372 377,557,562,567 572,577	RJA2E33R20101	Metal-oxide 1/4W 33.2 ohm +/-1%	
R358,363,368,373 378,558,563,568 573,578	RDA2E47001*01	Carbon 1/4W 47 ohm +/-5%	
R359,364,369,374 379,559,564,569 574,579,658,681	RDA2E30401*01	Carbon 1/4W 300K ohm +/-5%	
R360,365,370,375 380,560,565,570 575,580	RDA2E39201*01	Carbon 1/4W 3.9K ohm +/-5%	
R391,591	RDA2E33101*01	Carbon 1/4W 330 ohm +/-5%	
R601,908,910,912 914,916,933,935 937,939,941	RDA2E47201*01	Carbon 1/4W 4.7K ohm +/-5%	
R611,618,619,623 624,644,667,690 711,731,732,733 734,735	RDA2E27301*01	Carbon 1/4W 27K ohm +/-5%	
R625,645,668,691 712	RGA2E39502*04	Metal Film 1/4W 3.9M ohm +/-5%	
R626,646,669,692 713	RDA2E39401*01	Carbon 1/4W 390K ohm +/-5%	
R627,647,670,693 714	RDA2E22001*01	Carbon 1/4W 22 ohm +/-5%	
R628,649,671,695 715	RDA2E15501*01	Carbon 1/4W 1.5M ohm +/-5%	
R631,698,719	RDA2E33401*01	Carbon 1/4W 330K ohm +/-5%	
R633,660,684,701 721	RJA2E31610101	Metal-oxide 1/4W 3.16K ohm +/-1%	
R634,651,674	RDA2E51301*01	Carbon 1/4W 51K ohm +/-5%	
R635,655,678,702 722	RGA2E22602*04	Metal-oxide 1/4W 22M ohm +/-5%	
R637,704,724	RDA2E24401*01	Carbon 1/4W 240K ohm +/-5%	
R638,706	RJA2E82010101	Metal-oxide 1/4W 8.2K ohm +/-1%	
R639,640,662,663 741	RDA2E51201*01	Carbon 1/4W 5.1K ohm +/-5%	
R642,659,682,709 729	RDA2E75101*01	Carbon 1/4W 750 ohm +/-5%	
R643,666,689,710 730	RDA2E12401*01	Carbon 1/4W 120K ohm +/-5%	
R650,673	RJA2E22130101	Metal-oxide 1/4W 221K ohm +/-1%	
R652,675	RGA2E82502*04	Metal Film 1/4W 8.2M ohm +/-5%	
R653,654,676,677	RJA2E88730101	Metal-oxide 1/4W 887K ohm +/-1%	
R657,680	RJA2E10030101	Metal-oxide 1/4W 100K ohm +/-1%	
R661,685	RJA2E91010101	Metal-oxide 1/4W 9.1K ohm +/-1%	
R665	RDA2E16101*01	Carbon 1/4W 160 ohm +/-5%	
R697,718	RDA2E24301*01	Carbon 1/4W 24K ohm +/-5%	
R726	RJA2E75010101	Metal Film 1/4W 7.5K ohm +/-1%	

-5/7

REPLACEMENT PARTS LIST

Ref.No.	MFR's Part No.	Description		Remarks
R753,755,757,759 761	RDA2E56201*01	Carbon	1/4W 5.6K ohm +/-5%	
R743,745,747,749 751	RDA2E47201*11	Carbon	1/4W 4.7K ohm +/-5%	
R754,756,758,760 762	RDA2E27401*01	Carbon	1/4W 270K ohm +/-5%	
R764,766,768,770 772	RDA2E22301*01	Carbon	1/4W 22K ohm +/-5%	
R773,775,777,779 792,794,796,798 859,901	RDA2E12301*01	Carbon	1/4W 12K ohm +/-5%	
R783,785,787,789 791,838,839,857 858,943	RDA2E22301*01	Carbon	1/4W 22K ohm +/-5%	
R801	RGB3A10001*01	Metal-Oxide	1W 10 ohm +/-5%	
R824,825,826,827 828,829,830,831 832,833,834,835 902,903,904,905 906,907,918,919 920,921,922,923 924,925,926,927 945,946	RDA2E10301*01	Carbon	1/4W 10K ohm +/-5%	
R836,837,840,841 944	RDA2E11301*01	Carbon	1/4W 11K ohm +/-5%	
RV301,302,303,304 305,311,313,315 317,319,501,502 503,504,505,511 513,515,517,519	RP63H50301*02	Potentiometer	50K ohm-B	
RV601,602,603,604 605,701	RP63H50301*01	Potentiometer	50K ohm-B	
ST02	VX421NN008	Support		
TP1,3	YCS03C122**02	Connector		
TP2	YCS10C122**02	Connector		
TP4	YCS06C122**02	Connector		
U306,308,309,501 502,503,504,506 507,508,509,515 610,616,621,624 628	UAD353*****J1	IC	NJM353D	
U310,311,312,313 314,510,511,512 513,514	UBSUPC1252*01	IC	UPC1252H2	
U505,617,619,622 625,627,629,639 640,641,642,643 646,647,648,649	UAD6458****Y1	IC	LA6458D	

-6/7

REPLACEMENT PARTS LIST

Ref.No.	MFR's Part No.	Description	Remarks
650,651,652,653 654,655,656,657 658,659,660	UAD6458****Y1	IC LA6458D	
U601	UNDTC9176**01	IC TC9176P	
U602,603,604,605 606	UNDNJU211**01	IC NJU211	
U611,612,613,614 615	UBSUPC1253*01	IC UPC1253H2	
U644,645	UCD4053****M1	IC M4053BP	
U801	UAS7812A***01	IC UA7812	
U803	UAS78M05A**01	IC UA78M05	
ZZ01	VS223RH002	Silicon Sheet	
ZZ02	VF164DN003	Bushing	

-7/7

AP2. P.W. Board Assy (APSCZC1001AH)

A=Serial No. ***00001 - 01000, B=Serial No. from ***01001

Ref.No.	MFR's Part No.	Description	Remarks
	PSCZC1001A*01	P.W. Board (without parts)	
C714,715,716,717 718,719,720,721 722,723	CEC1H01001*01	Electrolytic 1 uF 50 V	
CN901,902,903 904,905	YCS04C102**02	Junction Jack	
CN906	YCS05C102**02	Junction Jack	
CN907	YCS06C102**02	Junction Jack	
CN908	YCS03C102**02	Junction Jack	
D120,121,122,123 124	DZMA1056L**02	Diode (zener) MA1056L	A
D120,121,122,123 124	DZMA1062L**02	Diode (zener) MA1062L	B
Q610,612,614,616 618,630,631,632 633,634,635,636 637,638,639	QT2SC3330**02	Transistor 2SC3330 (S,T)	
R705,948,949,950 952,954,955,956 959,960,961,962 963,965,966,967 969,970,971,972 973,975,977,978 981,982,984,985	RJA2E10020101	Metal-oxide 1/4W 10K ohm +/-1%	

-1/2

REPLACEMENT PARTS LIST

A=Serial No. ***00001 - 01000, B=Serial No. from ***01001

Ref.No.	MFR's Part No.	Description	Remarks
R986,987,988,989 991,993,994,995 997,998,999	RJA2E10020101	Metal-oxide 1/4W 10K ohm +/-1%	
R725,947,953,957 958,964,968,974 976,979,980,983 990,992,996	RDA2E10401*01	Carbon 1/4W 100K ohm +/-5%	
R842,843,844,845 846,852,853,854 855,856	RDA2E10301*01	Carbon 1/4W 10K ohm +/-5%	
R847,848,849,850 851	RDA2E18401*01	Carbon 1/4W 180K ohm +/-5%	
R951	RJA2E82010101	Metal-oxide 1/4W 8.2K ohm +/-1%	A
R951	RJA2E10020101	Metal-oxide 1/4W 10K ohm +/-1%	B
RV606,607,608 609,610,611,612 613,614	RP63H50301*02	Trimmer Pot Meter 50K ohm-B	
RV615	RP63H50301*02	Trimmer Pot Meter 50K ohm-B	
U662,663,664,665 666,667,668,669 670,671	UAD6458****Y1	IC LA6458D	
U672,673,674	UAD6458****Y1	IC LA6458D	
TP11	YCS10C122**02	Connector	

-2/2

AP3. P.W. Board Assy (APSLD241AH)

Ref.No.	MFR's Part No.	Description	Remarks
	PSLD241H1X	P.W. Board (without parts)	
HD10,11	VK111AW001	Holder LED	
LD101,102,103 104,105	AXLD012GEA	LED Assy LN161382P	
LD106,108,109	AXLD013GEA	LED Assy LN072384P	
LD107	AXLD014GEA	LED Assy LN074384P	
LD124,125	DLSLN422YP*01	LED LN422YP	
ST01	VX321NN004	Support	
SW105,106,107 108,109,110,111 112,113,114,115 116,117,118,119 120,121,122	SK01010602301	Key Board Switch	

-1/1

REPLACEMENT PARTS LIST

AP4. P.W. Board Assy (APSCZ038AH)

A=Serial No. ***00001 - 01000, B=Serial No. from ***01001

Ref.No.	MFR's Part No.	Description	Remarks
	PSCZ038H1X	P.W. Board (without parts)	
BAT1	ZBL003004**01	Lithium Battery	
C103	CER1C10201*01	Electrolytic 1000 uF 16 V	
C104	CEC1A10101*01	Electrolytic 100 uF 10 V	
C105	CEC1H0R105*01	Electrolytic 0.1 uF 50 V +/-20%	
C106	CEC1H01001*01	Electrolytic 1 uF 50 V	
C107,108	CCR1H33000101	Ceramic 33 pF 50 V +/-10%	
C109	CKR1H223F0101	Ceramic 0.022 uF 50 V +80%,-20%	
C111,117	CEC1C33101*01	Electrolytic 330 uF 16 V	
C112	CEC1A33001*01	Electrolytic 33 uF 10 V	
C113	CKR1H103F0101	Ceramic 0.01 uF 50 V +80%,-20%	
C114,115	CCR1H27000101	Ceramic 27 pF 50 V +/-10%	
C116	CFTC1H1040201	Film 0.1 uF 50 V +/-5%	
C118	CEC1C10001*01	Electrolytic 10 uF 16 V	
C119	CKR1H102B0101	Ceramic 1000 pF 50 V +/-10%	
CN101	YCS10B101**01	Junction Jack	
CN102	YCS08B101**01	Junction Jack	
D101,102,103,104 105,106,107,108 109,110,111,112 113,114,115,116 117,118,131	DDGMA01****01	Diode GMA-01	
D119	DZMA1030M**02	Diode (zener) MA1030M	
GC2	ACCNBH4ULA	Connection Cord Assy	
P103	WP09090LB**24	PC Joint 9P	
P103	WP08090LB**24	PC Joint 8P	A
P104	ACCNBH3ULA	Connection Cord Assy	B
P111,116	WP08090LB**24	PC Joint 8P	
P111,116	WP04090LB**24	PC Joint 4P	A
P112	ACCNBH5ULA	Connection Cord Assy	B
P113	WP06090LB**24	PC Joint 6P	
P114	ACCNBH7ULA	Connection Cord Assy	
P115,117	WP04090LB**24	PC Joint 4P	
P115,117	WP08090LB**24	PC Joint 8P	A
P802	ACCNBJ4ULA	Connection Cord Assy	B
P803	ACCNBJ3ULA	Connection Cord Assy	
P804	ACCNBJ7ULA	Connection Cord Assy	
P805	ACCNBJ5ULA	Connection Cord Assy	
P805	ACCNBJ6ULA	Connection Cord Assy	A
P806	ACCNBJ6ULA	Connection Cord Assy	B
P806	ACCNBJ5ULA	Connection Cord Assy	A
P807	ACCNBJ9ULA	Connection Cord Assy	B
P907	ACCNBJ8ULA	Connection Cord Assy	
Q101	QT2SA1317**02	Transistor 2SA1317 (S,T)	
Q102,103	QT2SK364***04	Transistor 2SK364 (BL,GR)	

-1/2

REPLACEMENT PARTS LIST

A=Serial No. ***00001 - 01000, B=Serial No. from ***01001

Ref.No.	MFR's Part No.	Description	Remarks
R101,102,103,104	RDA2E22101*01	Carbon 1/4W 220 ohm +/-5%	
105,106,107,108			
109,110,111,112			
113,114,115,116			
R117,118,119,120	RDA2E51201*01	Carbon 1/4W 5.1K ohm +/-5%	
129,130,131,132			
133,134,135,136			
137,152,153,154			
155			
R121,122	RDA2E68301*01	Carbon 1/4W 68K ohm +/-5%	
R123,124,144,145	RDA2E10301*01	Carbon 1/4W 10K ohm +/-5%	
157,159,160,171			
R125	RDA2E47101*01	Carbon 1/4W 470 ohm +/-5%	
R126	RDA2E47301*01	Carbon 1/4W 47K ohm +/-5%	
R138,139,140,141	RDA2E24301*01	Carbon 1/4W 24K ohm +/-5%	
142,143,151			
R146,147,148,149	RDA2E12301*01	Carbon 1/4W 12K ohm +/-5%	
150			
R158,163,164,165	RDA2E27201*01	Carbon 1/4W 2.7K ohm +/-5%	
166,167,168,169			
170,178			
R161,162	RDA2E18301*01	Carbon 1/4W 18K ohm +/-5%	
R172	RDA2E10401*01	Carbon 1/4W 100K ohm +/-5%	
R173	RDA2E47201*01	Carbon 1/4W 4.7K ohm +/-5%	
R174,175	RDA2E10501*01	Carbon 1/4W 68K ohm +/-5%	A
R174,175,177	RDA2E10501*01	Carbon 1/4W 68K ohm +/-5%	B
RV101	RP63H50301*02	Trimmer Pot Meter 50K ohm-B	
U101	ULG75104***01	IC uPD75104CW-045	
U102,103	UBDM54563**01	IC M54563P	
U104,105	UBDM54522**01	IC M54522P	
U106	UAD2903****J1	IC JRC2903	
U107	UCD4011****Z1	IC 4011	
U108,109	UCD4051****Z1	IC 4051	
U110,111	UNDSAB3013*02	IC SAB3013	
X101	CX41900201*01	Ceramic OSC 4190 kHz	

-2/2-

REPLACEMENT PARTS LIST

AP5. P.W. Board Assy (APSSW358AH)

Ref.No.	MFR's Part No.	Description	Remarks
	PSSW358H1X	P.W. Board (without parts)	
HD01,02,03,04,05 06,07,08,09,17	VK111AW001	Holder LED	
LD110,111,112 113,114,115,116 117,118,123	DLSLN222RP*01	LED LN222RP	
P101	ACCNBJ1ULA	Connection Cord Assy	
P102	ACCNBH9ULA	Connection Cord Assy	
SW123,124,125 126,127,128,129 130,131	SK01010602301	Key Board Switch	

-1/1

AP6. P.W. Board Assy (APSSS004AH)

Ref.No.	MFR's Part No.	Description	Remarks
	PSSS004H1X	P.W. Board (without parts)	
C110	CKR1H103F0103	Ceramic 0.01 uF 50 V +80%,-20%	
Z1	AXPS006GEA	Remote Control Sensor Assy	

-1/1

AP7. P.W. Board Assy (APSSW359AH)

Ref.No.	MFR's Part No.	Description	Remarks
	PSSW359H1X	P.W. Board (without parts)	
HD12,13,14,15,16	VK111AW001	Holder LED	
LD119,120,121 122,126	DLSLN222RP*01	LED LN222RP	
SW101,102,103,104	SK01010602301	Key Board Switch	

-1/1

REPLACEMENT PARTS LIST

AP8. P.W. Board Assy (APSLD242AH)

Ref.No.	MFR's Part No.	Description	Remarks
	PSLD242H1X	P.W. Board (without parts)	
LD127	DLSLN222RP*01	LED LN222RP	
P801	ACCNBJ2ULA	Connection Cord Assy	
R128	RDA2E75201*01	Carbon 1/4W 7.5K ohm +/-5%	

-1/1

AP9. P.W. Board Assy (APSSW361AA)

Ref.No.	MFR's Part No.	Description	Remarks
	PSSW361H1X	P.W. Board (without parts)	
	MW201BS005	Terminal	
C1	CKP2G102E0103	Ceramic 1000 pF +/-20%	
SW	SP01000024*04	Push Switch	

-1/1

AP10. P.W. Board Assy (APSZZ299AA)

Ref.No.	MFR's Part No.	Description	Remarks
	PSZZ299H1X	P.W. Board (without parts)	
C3,4,5,6	CKP2H103E0101	Ceramic 0.01 uF 500 V +100%,-0%	
GC1	ACCNBH6ULA	Connection Cord Assy	

-1/1

LIST 3. PRINTED MATERIALS

Ref.No.	MFR's Part No.	Description	Remarks
31	KT5BXDSPXX	Owner's Manual	
32	KW000341AX	Warranty Card	
33	KF243400E2	Polyethylene Bag	
34	VVL311GEA0	Label	
36	KZ000294XX	Caution Sheet	

-1/1

REPLACEMENT PARTS LIST

LIST 4. PACKING MATERIALS

Ref.No.	MFR's Part No.	Description	Remarks
41	KP5BXDSP01	Inner Carton	
42	KS5BXDSP01	Outer Carton	
43	KN4000XU01	Partitioner	
44	KF506200E2	Polyethylene Bag	
45	VVL311GEA0	Label	
47	KA4000XR01	Reinforcement	
48	KC000510XX	Caution Label	

-1/1

LIST 5. ACCESSORIES

Ref.No.	MFR's Part No.	Description	Remarks
51	ACSP023GEA	Stereo Audio Cable	
52	AZ5BXDS*01	Remote Control Assy	
53	ZBM301501**01	Battery	

-1/1

LIST 6. SHIPPING MATERIALS

Ref.No.	MFR's Part No.	Description	Remarks
61	KM5BXDSP01	Master Carton	

-1/1

PS5BXDSHIX

PSAB077COX

PSCZ1001AX01

PSL0242HIX

PSSW361HIX

DTC144ES x 3

2SK364 x 4

2SA1317

TC9176

4053 x 2

2SC3330 x 20 Q610~619 Q630~639

2SC2878 x 15 Q605~609 Q620~629

MJM233 U206, 308, 309, 501~504, 506~509, 515 U610, 616, 621, 624, 628

LA6458 U505, 617, 619, 622, 625, 627, 629 U639~643, 646~660, 662~674

5BX-DS (1/2) SCHEMATIC DIAGRAM

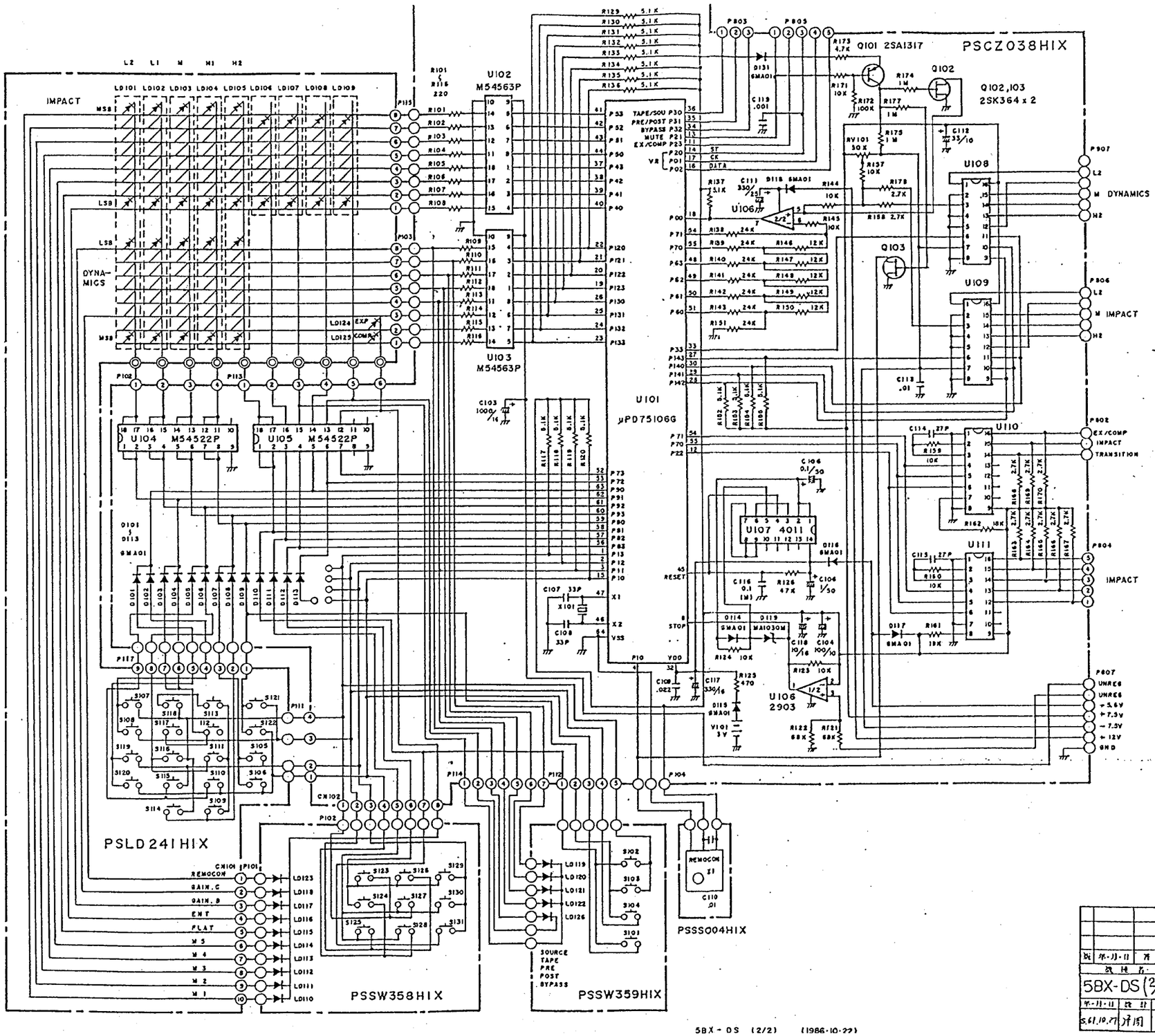

S101	SOURCE	
S102	TAPE	
S103	PRE / POST	
S104	BYPASS	
S105	TRANSITION	Δ
S106	TRANSITION	∇
S107	DYNAMIC	Δ
S108	DYNAMIC	∇
S109	10K - 20K	∇
S110	2.5K - 10K	∇
S111	300 - 2.5K	∇
S112	50 - 300	∇
S113	20 - 50	∇
S114	10K - 20K	Δ
S115	2.5K - 10K	Δ
S116	300 - 2.5K	Δ
S117	50 - 300	Δ
S118	20 - 50	Δ
S119	IMPACT	Δ
S120	IMPACT	∇
S121	ATT	Δ
S122	ATT	∇
S123	M1	
S124	M4	
S125	ENTER	
S126	M2	
S127	M5	
S128	SET	
S129	M3	
S130	FLAT	
S131	CHANGE	

版	年-月-日	著名	通知番号	変更記事
機種名 5BX-DS (2/2)		SCHEMATIC DIAGRAM	図番	US-5BX*DS**-
年-月-日	設計	写図	調査	承認
5.61.10.27	斉周			[redacted]

5BX-DS (2/2) (1986-10-22)